G. B. KOHLER.

FARE BOX.

APPLICATION FILED DEC. 7, 1910.

1,068,785.

Patented July 29, 1913.

4 SHEETS—SHEET 1.

Fig. 3.

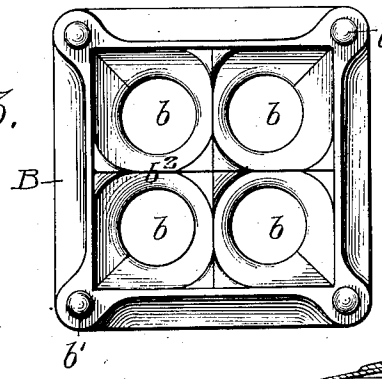

Fig. 1.

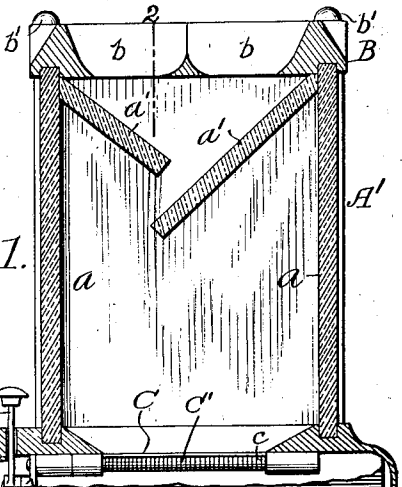

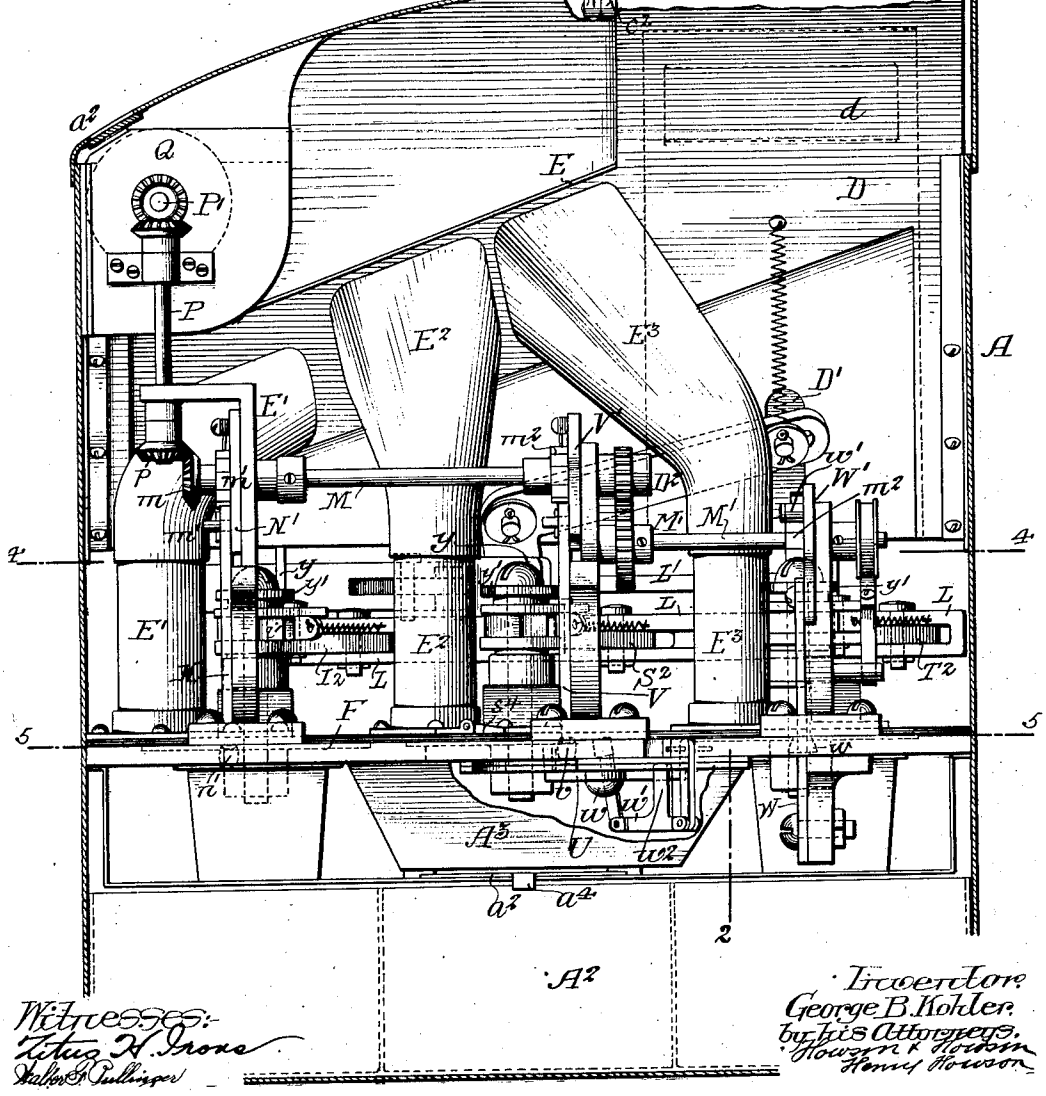

Witnesses:
Titus H. Irons
Fuller & Pellinger

Inventor
George B. Kohler.
by his Attorneys.
Howson & Howson
Howson Howson

G. B. KOHLER.

FARE BOX.

APPLICATION FILED DEC. 7, 1910.

1,068,785.

Patented July 29, 1913.

4 SHEETS—SHEET 2.

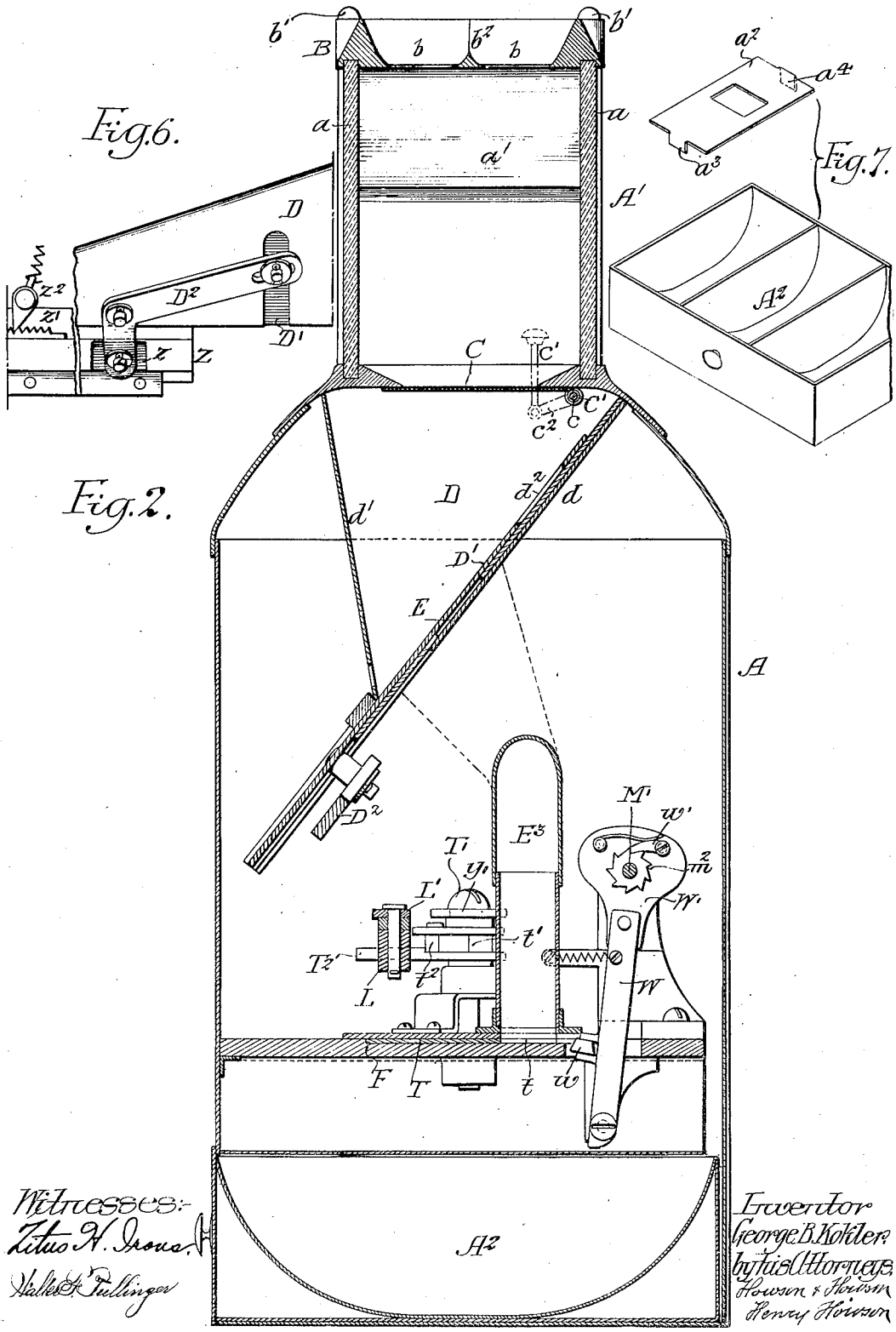

Witnesses:-
Titus H. Irons.
Walter F. Pullinger

Inventor
George B. Kohler.
by his Attorneys.
Howson & Howson
Henry Howson

G. B. KOHLER.

FARE BOX.

APPLICATION FILED DEC. 7, 1910.

1,068,785.

Patented July 29, 1913.

4 SHEETS—SHEET 3.

Fig. 4.

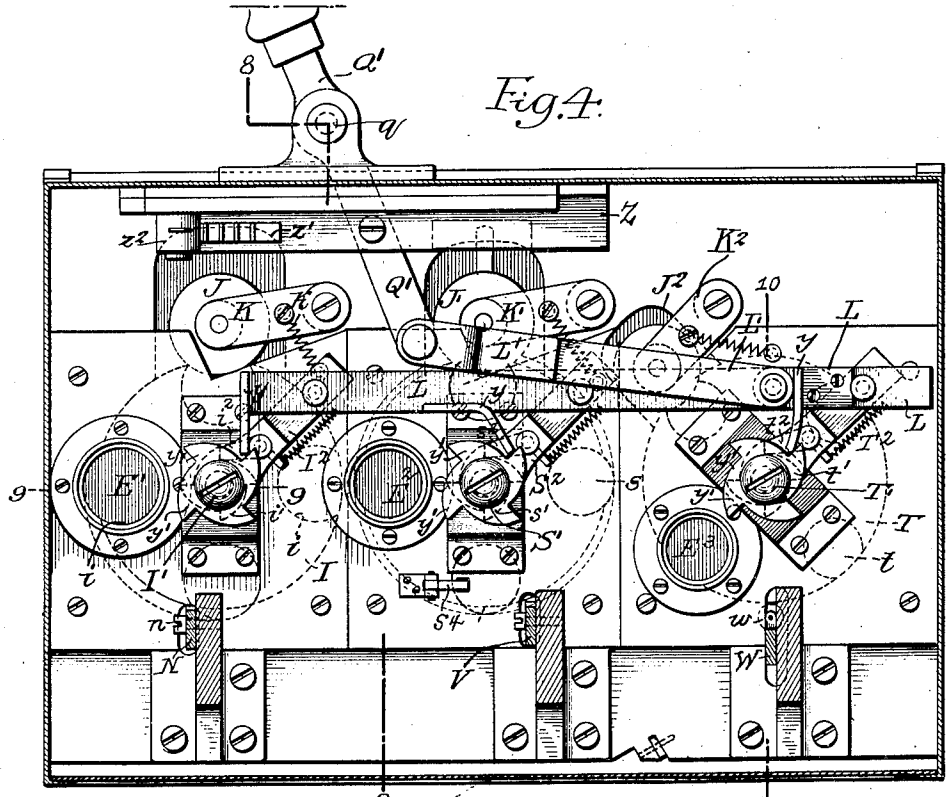

Fig 5

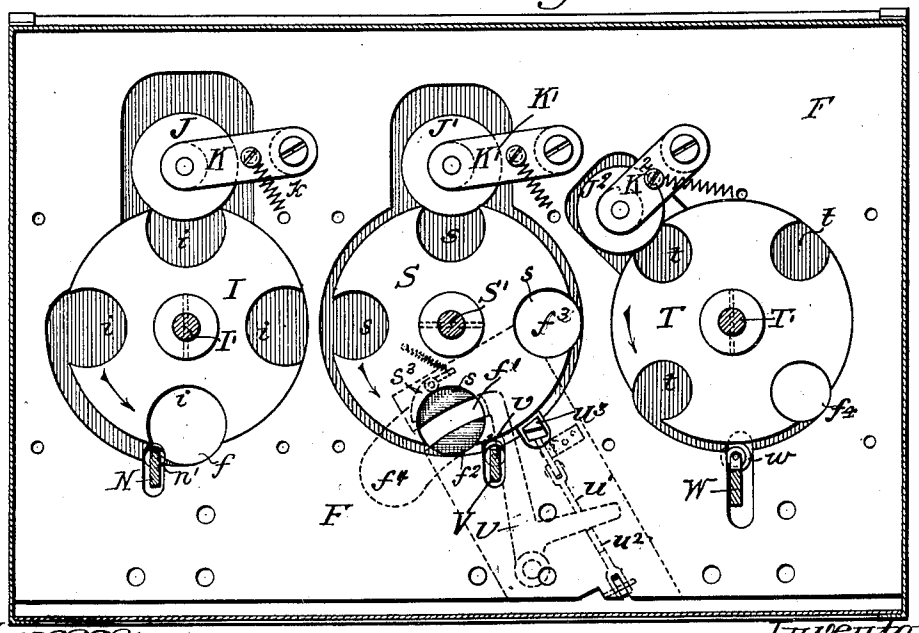

Witnesses:—
Titus H. Irons.
Walter R. Pullinger

Inventor
George B. Kohler, by his Attorneys,
Howson & Howson
Henry Howson

G. B. KOHLER.

FARE BOX.

APPLICATION FILED DEC. 7, 1910.

1,068,785.

Patented July 29, 1913.

4 SHEETS—SHEET 4.

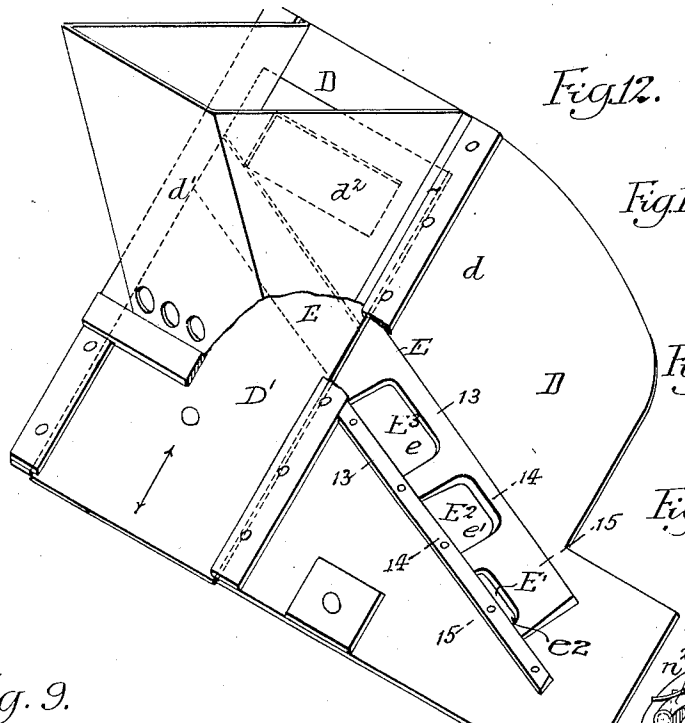

Fig. 9.

Fig.12.

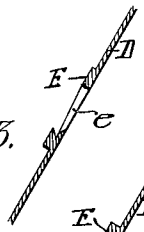

Fig.13.

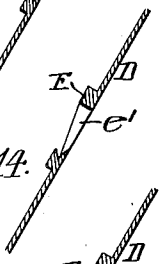

Fig.14.

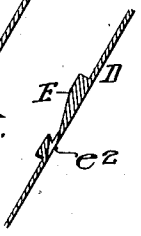

Fig.15.

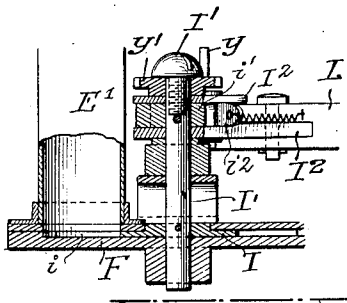

Fig.8.

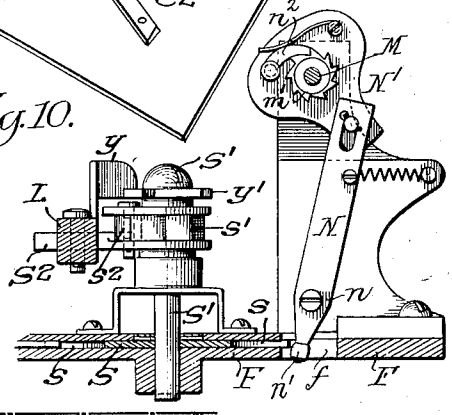

Fig.10.

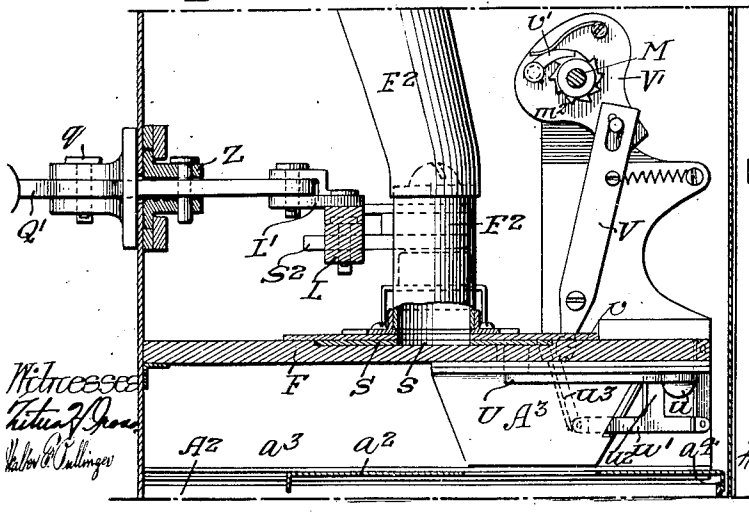

Fig.11.

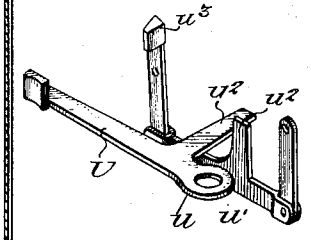

Witnesses:
Victor J. Evans
Walter C. Dillinger

Inventor:
George B. Kohler.
by his Attorneys
Howson & Howson
Perry Howson

UNITED STATES PATENT OFFICE.

GEORGE B. KOHLER, OF PHILADELPHIA, PENNSYLVANIA, ASSIGNOR TO THE J. G. BRILL COMPANY, OF PHILADELPHIA, PENNSYLVANIA, A CORPORATION OF PENNSYLVANIA.

FARE-BOX.

1,068,785. Specification of Letters Patent. Patented July 29, 1913.

Application filed December 7, 1910. Serial No. 596,034.

To all whom it may concern:

Be it known that I, GEORGE B. KOHLER, a citizen of the United States, residing in Philadelphia, Pennsylvania, have invented certain Improvements in Fare-Boxes, of which the following is a specification.

My invention relates to certain improvements in fare boxes in which the coins are selected and registered separately.

One object of my invention is to improve the construction of this type of fare box so that the fares will be accurately registered and the coin itself will act as the means for imparting movement to the registering mechanism.

A further object of the invention is to provide means whereby the one cent pieces will be collected until five or other proper numbers are dropped in the fare box before the registering mechanism will be actuated.

A still further object of the invention is to prevent any coin greater than a ten cent piece passing into the fare box.

In the accompanying drawings:—Figure 1, is a longitudinal sectional view of my improved fare box; Fig. 2, is a transverse sectional view on the line 2—2, Fig. 1; Fig. 3, is a plan view of the fare receiving section; Fig. 4, is a sectional plan view on the line 4—4 Fig. 1; Fig. 5, is a sectional plan view on the line 5—5 Fig. 1; Fig. 6, is a view illustrating a detail of the invention; Fig. 7, is a perspective view of the fare receiving drawer and its slide; Fig. 8, is a transverse sectional view on the line 8—8 Fig. 4; Fig. 9, is a sectional view on the line 9—9 Fig. 4; Fig. 10, is a sectional view on the line 10—10 Fig. 4; Fig. 11, is a perspective view showing the discharging lever for the one cent pieces; Fig. 12, is a detached perspective view of the hopper and slide way; Fig. 13, is a sectional view on the line 13—13 Fig. 12; Fig. 14, is a sectional view on the line 14—14 Fig. 12, and Fig. 15, is a sectional view on the line 15—15 Fig. 12.

A is the body of the fare box having a fare receiving section A′ and a drawer or compartment A^2 at the bottom for the reception of coins after they have passed through the mechanism for actuating the register. The fare receiving section has glass sides *a*—*a* and inclined deflectors *a*′. Above the deflectors is a cap plate B, Fig. 3, having four funnel shaped openings *b*, in the present instance. These openings are of such a diameter that only a ten cent piece, a five cent piece and a one cent piece will pass through the openings. This cap B forms the top plate for the fare receiving section A and is secured by corner bolts *b*′.

It will be noticed that the partition b^2 separating the several openings is low in comparison with the sides so that if a number of coins are placed on the cap plate B the smaller ones will find their way through the openings while the larger ones will be retained on the cap plate. Furthermore, this prevents manipulating the coin after it passes through the cap plate as the openings are comparatively small.

C is a platform at the base of the fare receiving section A′. This platform in the present instance is mounted on a rock shaft *c* actuated by a push rod *c*′ projecting through the casing of the fare box as illustrated in Fig. 1; the push rod being connected to an arm c^2 on the rock shaft *c*. A spring C′ tends to hold the platform in its closed position. By this means any number of fares can be accumulated on the platform C and then discharged into the body of the box by pushing down on the rod *c*′, after which on operating a lever the several coins will be distributed and registered.

Directly under the fare receiving sections A′ is a hopper D having inclined sides *d* and *d*′; the plate forming the sides *d* extends past the end of the plate forming the sides *d*′. On the side *d* is an inclined channel forming the forward end of the inclined way E in which are the openings *e*, *e*′, e^2 for the passage of the different coins. Arranged to slide in the hopper D is a push plate D′ having a quadrangular opening d^2 in the present instance. This push plate is given a reciprocating movement in the direction of the double arrow Fig. 12, and picks up the coins in the hopper and drops them into the inclined channel of the way E. They roll down this way and pass through their respective openings into the tube E′, E^2 and E^3 respectively. Thus, by operating the slide several times all the coins in the hopper will be selected and will pass to their particular tubes. The tubes E′, E^2, E^3 are attached to the inclined way and communicate with the openings *e*, *e*′, e^2 respectively. The vertical sections of these tubes termi-

nate at a transverse partition plate F separating the fare receptacle A^2 from the body of the fare box.

The tube E′, in the present instance, is of such a size as to receive five cent pieces; the tube E^2 is of a size to receive only one cent pieces and the tube E^3 receives only ten cent pieces.

I will describe the mechanism first in connection with the means for allowing a five cent piece to pass into the cash receptacle and the means for registering the same.

I is a disk having notches *i* of a size to accommodate a five cent piece. These notches are so shaped that about one third of the coin within the notch projects beyond the edge of the disk so as to actuate the registering mechanism. The disk is mounted on a shaft I′ adapted to suitable bearings in the partition F and on the upper end of this shaft is a ratchet wheel *i′*, having, in the present instance, four teeth corresponding with the four notches in the disk. Mounted loosely on the shaft is a lever I^2 having a pawl i^2 which engages the teeth of the ratchet wheel *i′*. A spring carried by the lever and connected to an arm on the pawl tends to hold the pawl in contact with the ratchet wheel. On the reciprocation of the lever I^2, the disk I will be moved a one-quarter turn.

In order to hold the disk I in position, I provide a detent roller J mounted on an arm K pivoted to the plate F. A spring *k* tends to hold the roller against the disk; the roller resting in one of the notches of the disk, preventing it from being jolted out of alinement, but the roller will readily yield when pressure is applied to turn the disk.

In the plate F is an opening *f*, Figs. 5 and 10, through which the coin passes to the fare receptacle A^2, and when the coin travels from the mouth of the tube E′ to the opening *f* it passes the end of a lever N, which is pivoted at *n* to a frame secured to the casing and on the end of this lever in line with the coin is preferably mounted a roller *n′*. The other end of the lever N is connected to a rocker N′ having a pawl n^2 which engages a ratchet wheel *m′* on a shaft M having a bevel wheel *m* which meshes with a bevel wheel *p* on a vertical shaft P which is geared to the shaft P′ of the register Q. This register may be made in any ordinary manner common to this type of apparatus.

In the case in front of the register is a glazed opening a^2 through which the numbers of the register can be readily seen from the outside of the box. The parts are so proportioned that the register will be turned each time to register and indicate five or ten cents.

S is the disk having notches which aline with the tube E^2 for the one cent pieces and is made similar to the disk I and is engaged by the detent roller J′ mounted on a spring controlled lever K′. This disk is mounted on a shaft S′ similar to the shaft I′ and has a four toothed ratchet wheel *s′*, in the present instance, which is engaged by a pawl s^2 on the lever S^2.

The opening *f′* in the plate is of a depth to hold four one cent pieces and is closed at the bottom by flanges f^2 leaving a space for the travel of the end of the ejecting lever U pivoted at *u*, which when actuated pushes the four one cent pieces off of the flanges through the opening f^4 under the plate F. The lever U is actuated by a bar *u′* having an arm u^2 which contacts with the short arm of the lever U. The bar is connected to one arm of a lever u^3 which is pivoted to the plate F and is in the path of the fifth one cent piece which travels over the other four and drops through the hole f^3. The coin in its travel contacts with a roller *v* on a lever V, which in turn actuates a rocker V′ having a pawl *v′* which engages a ratchet wheel m^2 on the shaft M and moves the register the required distance.

T is a disk mounted on the shaft T′ and having notches *t* which are of such a size as to receive a ten cent piece. These notches aline with the tube E^3 and the opening f^4 in the plate F. The shaft T′ has a ratchet wheel *t′* which is engaged by the pawl t^2 on the arm T^2 and there is a spring tending to hold the pawl in contact with the ratchet wheel. This construction is similar to the construction on the other shafts I′ and S′. A detent wheel J^2 engages the notches *t* in the disk T and this detent wheel is mounted on a disk-controlled lever K^2 similar to the other levers K—K′.

A ten cent piece as it travels through the tube E^3 and through the opening f^2 in the plate F contacts with a roller *w* on an arm W pivoted to the frame and this arm actuates a rocker W′ carrying a spring pawl *w′* which engages a ratchet wheel m^2 on the shaft M′, which is geared to the shaft M, clearly indicated in Fig. 1; the gearing being two to one so as to move the registering mechanism the proper distance to indicate ten cents.

In order to actuate the several mechanisms, I connect the levers I^2, S^2 and T^2, to a common bar L and this bar in turn is connected by a link L′ to one arm of the hand lever Q′ pivoted at *q* to a bearing on the outside of the casing A of the fare box. The lever extends through an opening in the fare box and is connected to the link as above described.

The lever Q′ is provided with a suitable handle so that the operator can readily reciprocate it to impart motion to the bar L and to the several levers carrying the pawls. In order to prevent the disks moving backward after the pawls move them forward

and after the bar L is at rest in the position illustrated in Fig. 4, I provide the bar with projections y which contact with the teeth of the detent ratchet wheels y' on the shafts I', S' and T'. The lever Q' also actuates the reciprocating slide D' for ejecting the coins from the hopper D. The lever, in this instance, passes through a slot in a slide Z adapted to ways on the inside of the casing of the fare box and in this slide is a pin z which enters one arm of a bell crank lever D^2; the other arm of the lever being attached to the slide D as clearly indicated in Fig. 6, so that on the reciprocation of the lever Q' the slide D will be moved, reciprocating the hopper D.

z' is a series of teeth on the slide Z with which a click device z^2 engages so as to prevent the return movement of the slide and the lever Q' after the lever has once been moved forward and before it has made its full movement, thus it is impossible for the disks to be only given a partial movement. They must be moved in the present instance a quarter turn so as to carry a coin from the tube to the discharage opening in the partition F.

The operation of the fare box is as follows:—The fare box is usually located on the rear platform of a passenger car so that persons entering the car will place their fares in the box as they pass from the platform into the body of the car. The proper amount is supposed to be deposited in the fare box. In the present instance a five cent piece or five one cent pieces can be deposited in the box for a single fare, or a ten cent piece, two five cent pieces or ten one cent pieces in payment of two fares and so on *ad infinitum*. The opening in the top plate, however, is so proportioned that nothing higher than a ten cent piece will be received and if a passenger on entering a car has no coin of a smaller denomination than a twenty-five cent piece, he will have to have it changed by the conductor so as to deposit the proper amount in the box. The coins may accumulate in the bottom of the receiving section A' and the conductor can discharge them all at the same time into the hopper D or one fare can be discharged at a time, if desired. Then by reciprocating the hand lever Q' the coins are lifted from the hopper by the slide and rolled down the inclined edge of the slide on to the inclined slide way and pass through their respective openings into the tubes and rest in position so that on the reciprocation of the lever the disks will carry a single coin at a time from the mouth of a tube to the discharge opening in the partition and as it passes a certain point the coin itself will actuate the registering mechanism and will pass into the fare receptacle. In the case of the five cent pieces and ten cent pieces the coin drops through the partition on the movement of the disk and in the case of five one cent pieces the coins accumulate in the pocket or opening before they are discharged into the receptacle and are discharged by the fifth coin which actuates the register and simultaneously with the movement of the register a lever is actuated to push the four one cent pieces into the fare receptacle.

In the present instance the fare receptacle is in the form of a partitioned drawer A^2 Fig. 7, which can be opened by the conductor as this particular fare box is only for the purpose of registering the fare, the conductor can use the money collected in making change. In order to prevent any one cent piece dropping back of the drawer when it is pulled out, I provide a slide a^2 which is moved forward by the back of the drawer coming in contact with a projecting lip a^3 on the slide, causing the slide to close the mouth of the hopper A^3. The drawer when closed comes in contact with a lip a^4 at the rear of the slide, causing it to be moved so that its opening is in line with the mouth of the hopper.

In some instances, the drawer may be locked when the conductor is not required to handle the money passing through the box.

In some instances it may be necessary to provide means for preventing the one cent pieces from being shifted accidentally from the receptacle in the partition plate F formed by the flanges f^2 and I provide a spring detent arm s^3 which extends across the path of the coins so that they cannot be accidentally shifted from the receptacle and drop through the opening f', but the spring is not sufficient to prevent the coins from passing through the opening f' when pushed by the lever U. In order to hold the coins in place in the receptacle I provide an arm s^4 which bears upon the face of the top coin, but this arm is so shaped as not to interfere with the coin passing freely under it when the fifth coin travels over the receptacle and is discharged from the hole f^3.

I claim:—

1. The combination in a fare box, of a fare receiving section, a hopper V-shaped in cross section, a reciprocating slide adapted to travel over one of the surfaces of the hopper, an inclined way in the hopper back of the slide, so that when a coin is selected by the slide it will roll down the inclined way, said way having an opening beyond the hopper, a tube communicating with the opening, an intermittently moving disk having notches for the reception of the coins, a partition over which the disk travels, said partition having a discharge opening through which the coin drops as it is moved from the tube, registering mechanism, and means in the path of the coin, as it is carried

by the disk, for actuating the registering mechanism.

2. The combination in a fare box, of a casing, a fare receiving section, a discharge platform for discharging the fares from the fare receiving section into the body of the box, a hopper, V-shaped in cross section, and mounted under the fare receptacle, a reciprocating slide having its upper edge beveled to engage coins within the fare box, an inclined way communicating with one end of the hopper, one wall of the slideway having two or more openings, one opening being of a different dimension than the other, tubes communicating with the several openings, a partition, notched disks at each tube so arranged that a coin passing through a particular tube will pass into a notch in the disk, means for intermittently rotating the disks, said partition having openings through which the coins pass when they are carried away from the mouth of the tube, registering mechanism and means in the path of the coins, as they are carried by the disks, for actuating the registering mechanism.

3. The combination in a fare box, of a casing, means for discharging fares into the body of the fare box, a hopper under the discharge opening V-shaped in cross section, a reciprocating slide for lifting the coins within the fare box, an inclined way extending into the hopper and in line with the inclined edge of the slide when in the raised position so that the coin will pass from the slide onto the inclined way, one wall of the inclined way having a series of openings, said openings being of different dimensions to accommodate coins of different sizes, a tube communicating with each opening, an intermittently rotating disk mounted at the mouth of each tube, each disk being notched to receive a coin of a given size, a partition below the disk, the partition having an opening at each disk, a single register, and means in the path of the coin, as it is carried by a disk, for actuating the registering mechanism, so that the coins are selected and registered as they pass through the fare box.

4. The combination in a fare box, of a hopper V-shaped in cross section, an inclined way communicating with the hopper, means for discharging fares into one end of the hopper, a slide mounted so as to pass through the hopper at the point where the two sides join, means for reciprocating the slide so as to lift coins from the hopper and direct them into the inclined way, one wall of the inclined way having a series of openings differing in dimensions so as to allow coins of a given size to pass through the openings, tubes communicating with each of said openings, a partition plate, having an opening some distance from the mouth of each tube, an intermittently rotating disk notched to receive coins from the tubes and transfer them to the openings in the partition, pawl and ratchet mechanism for rotating the said disks, levers carrying the pawls, a bar common to all the levers, a hand lever for reciprocating the bar and for actuating the selecting slide, registering mechanism, and means in the path of the coin for actuating the registering mechanism.

5. The combination in a fare box, of a slide, a hopper, V-shaped in cross section, within the casing, a movable platform for discharging fares into the hopper, an inclined way communicating with one end of the hopper, a reciprocating slide adapted to move within the hopper and select coins from the hopper and transfer them to the inclined way, one wall of the inclined way having a series of openings differing in size, and a tube communicating with each opening, a partition plate at which the tubes terminate, a notched disk for each tube, the notches being arranged so as to aline with the mouth of the tubes, the partition having a series of openings, means for intermittently rotating the disks so as to shift a coin from the mouth of a tube to one of said openings, shafts upon which the disks are mounted, a ratchet wheel mounted on each shaft, a lever mounted loosely on each shaft and a pawl carried by each lever and engaging the ratchet wheel, a bar common to all of the levers and having projections, with a detent wheel on each shaft with which the projections engage so as to prevent the disks moving backward, an operating lever projecting from the casing of the fare box, and connected to the bar for actuating the levers in unison, a registering mechanism and actuating means for the registering mechanism in the path of the coins as they are carried by the disks from their tubes to the discharge openings.

6. The combination in a fare box of a tube into which the coins pass, a notched disk, a shaft on which the notched disk is mounted, the notches of the disk being at the sides to receive the coins passing through the tube, a plate having a discharge opening through which the coins pass after they have been carried by the disks from the tube, registering mechanism, a shaft geared to the registering mechanism, a ratchet wheel on the shaft, a rocker loose on the shaft and carrying a pawl engaging the ratchet wheel, a lever for actuating the rocker, one arm of the lever being in the path of the coin as it is transferred from the tube to the discharge opening.

7. The combination in a fare box, of a casing, a fare receiving section, a hopper on the fare receiving section, said hopper being V-shaped in cross section, an inclined

way projecting from one side of the hopper, a discharge platform for discharging a coin from the receiving section into the hopper, a reciprocating slide for selecting a coin from the hopper and directing it into the inclined way, the inclined way having three openings of different dimensions, a tube communicating with each of said openings, a partition plate separating the fare receptacle in the bottom of the box from the body of the box, the partition having three openings some distance from each tube, intermittently rotating disks having notches to receive the coins and transfer them from the tube to the opening in the partition, means for intermittently reciprocating the disks, a hand lever for actuating said means, registering mechanism, a rotating shaft geared to said registering mechanism, levers having one arm in the path of the coin carried by the disks, rockers actuated by the levers, a pawl on each rocker, and a ratchet wheel on the shaft with which the pawls engage, means for collecting a series of coins in one of the openings in the partition until they reach a given number, and means actuated by a coin carried by the disk for discharging the coins.

8. The combination in a fare box, of a hopper within the box, a fare receiving section, means for discharging a coin from the fare receiving section, said hopper being V-shaped in cross section, a reciprocating slide entering the hopper at the bottom and arranged to travel over one of the inclined slides, an inclined way extending into the hopper and arranged so that when the coin is raised by the slide it will pass from the slide onto the inclined way, said inclined way having a series of openings, tubes communicating with the openings, an intermittently rotating disk for discharging coins from the tubes, means for intermittently operating the disks, an operating lever projecting through the walls of the fare box and connected to the operating mechanism for the disks and with the means for engaging the reciprocating slide.

9. The combination in a fare box, of a fare receiving section, a pivoted discharge platform at the base of said section, a push rod projecting through the casing for turning the platform on its pivot to discharge the coin into the box, a hopper within the box and under the fare receiving section, said hopper being V-shaped in cross section, a reciprocating slide entering the hopper at the bottom and adapted to lift the coin against one side of the hopper, the upper end of the slide having a quadrangular opening, an inclined way communicating with one end of the hopper and extending back of the slide so that the coin selected by the slide will pass onto the inclined way, the inclined way having a series of openings in one wall, said openings being of different dimensions to receive coins of different sizes, tubes communicating with the said openings, intermittently rotating notched disks for transferring the coins from the tubes, registering mechanism and means for actuating said registering mechanism operated by the direct action of the coins as they pass from the tubes, two of said mechanisms moving the register a given distance and the third mechanism moving the register twice the distance to register coins of different dimensions.

10. The combination in a fare box, of a fare receiving section, a pivoted discharge platform, a hopper into which the fare is discharged, an inclined way communicating with the hopper, said inclined way having a series of openings differing in size, and through which the coins pass as they travel down the inclined way, a tube connecting with each opening, a partition, a rotating disk at the mouth of each tube mounted above the partition, said disks having notches for the reception of the coins, the partition having discharge openings some distance from the mouth of the tube, so that the coin will be carried from the tube to the discharge opening; registering mechanism, and means for actuating the registering mechanism acted upon by the coins as they are carried from the tube to the discharge opening; a receptacle forming part of the discharge opening from one of the disks in which a series of coins are collected, said partition having a second discharge opening some distance from the receptacle, with means for discharging all the coins from the receptacle actuated by a coin carried from the receptacle by the discharging means and discharged through the second opening.

11. The combination in a fare box, of a tube through which the fare passes, a partition plate, a receptacle in the partition plate some distance from the mouth of the tube, said receptacle being capable of holding several coins, a notched disk for carrying coins from the tube to the receptacle, a pivoted arm for discharging the coins accumulated in the receptacle, means for operating the arm actuated by a coin carried by the notched disk over the receptacle when the said receptacle is filled with coins, registering mechanism, and means in the path of the coin as it is carried by the disk for operating the registering mechanism.

12. The combination in a fare box, of a tube, a partition plate, a receptacle in said partition plate some distance from the mouth of the tube and arranged to hold a given number of coins, said partition plate having an opening beyond the said receptacle, an intermittently rotating disk having notches to receive coins and to convey them to said

receptacle and, when the receptacle is full, to discharge the next coin through an opening beyond the receptacle, a spring finger tending to hold the coins in said receptacle, a discharge lever acting to push the coins laterally from the receptacle in a direction opposite the movement of the rotating disk, a lever for actuating the discharge lever, said lever being located between the receptacle and the opening in the partition plate and in the path of the coin as it passes the receptacle, the coin, after actuating the lever mechanism, being discharged through the opening in the partition plate, registering mechanism, and means in the path of the coin for actuating the registering mechanism.

In testimony whereof, I have signed my name to this specification, in the presence of two subscribing witnesses.

GEORGE B. KOHLER.

Witnesses:
WM. E. SHUPE,
WM. A. BARR.