United States Patent [19]

Doyen

[11] **3,831,821**

[45] **Aug. 27, 1974**

[54] **METERING DISPENSER FOR FLOWABLE MATERIAL**

[75] Inventor: **Louis Doyen,** Lyon, France

[73] Assignee: **Thimonnier & Cie,** Lyon, France

[22] Filed: **Apr. 9, 1973**

[21] Appl. No.: **349,050**

[52] **U.S. Cl.** **222/255,** 53/28, 137/540, 141/261, 222/309, 222/444

[51] **Int. Cl.** **B65b 9/12**

[58] **Field of Search** 141/46, 258, 261; 239/590.3, 590.5; 137/540, 543.13; 417/507, 543; 222/255, 309, 444, 70; 53/28

[56] **References Cited**

UNITED STATES PATENTS

2,737,022	3/1956	Collins	222/444
3,381,856	5/1968	Hrdina	222/309
3,473,562	10/1969	Ellison	239/590.3
3,637,116	1/1972	Rutherford	222/309

Primary Examiner—Robert B. Reeves
Assistant Examiner—Thomas E. Kocovsky
Attorney, Agent, or Firm—Karl F. Ross; Herbert Dubno

[57] **ABSTRACT**

A dispenser for periodically discharging a metered quantity of a liquid or other flowable medium from an outlet, e.g. into a series of containers successively formed from a surrounding plastic sheath, includes two valves in tandem in a conduit extending from a reservoir to the outlet. A first branch of the conduit, upstream of the first valve, communicates with a pressure accumulator while a second branch, between the two valves, forms a metering chamber provided with a piston whose discharge stroke is initiated by a timer substantially concurrently with the opening of the normally closed second valve and closure of the first valve which reopens upon the succeeding intake stroke. The second valve, adjacent the outlet, is reclosed by the piston toward the end of its discharge stroke. The storage capacity of the pressure accumulator is less than the pumping capacity of the metering piston to avoid extended residence of any liquid in the accumulator.

11 Claims, 5 Drawing Figures

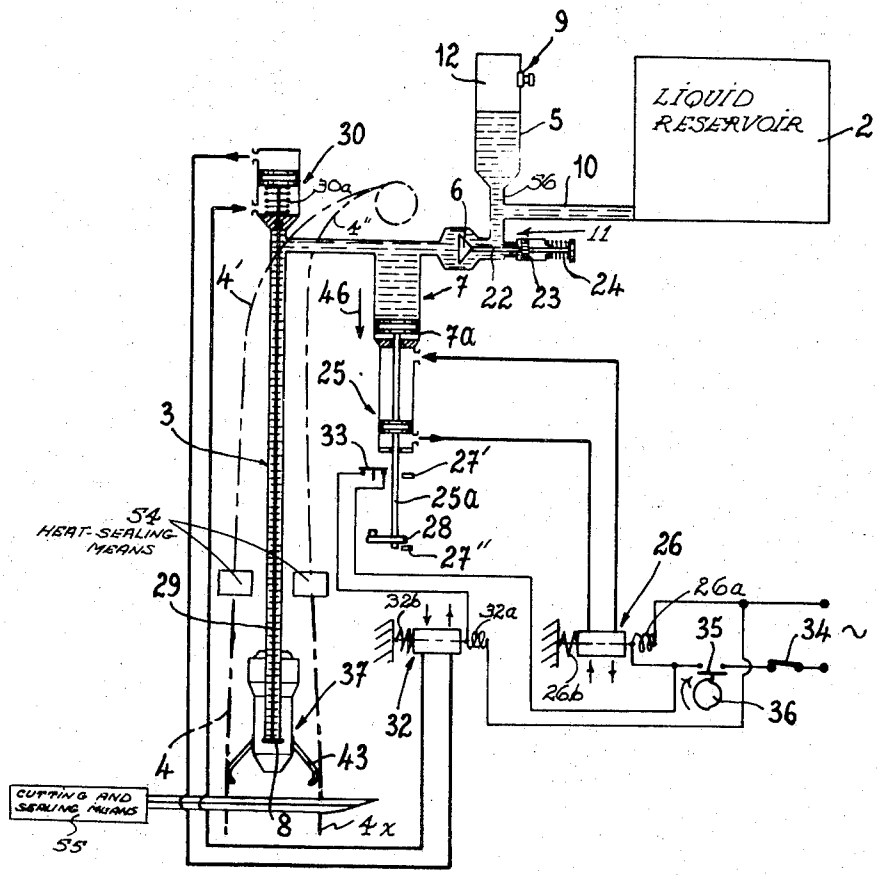

FIG. 3

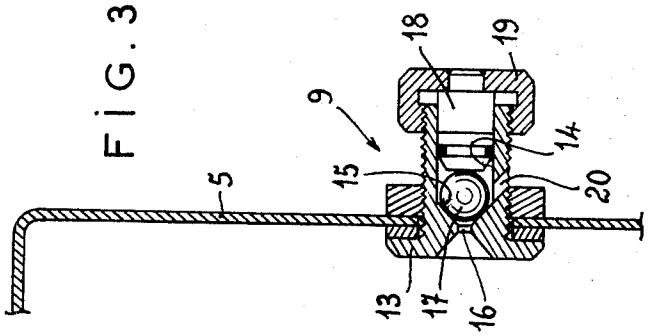
9
5
13
14
15
16
17
18
19
20

FIG. 1

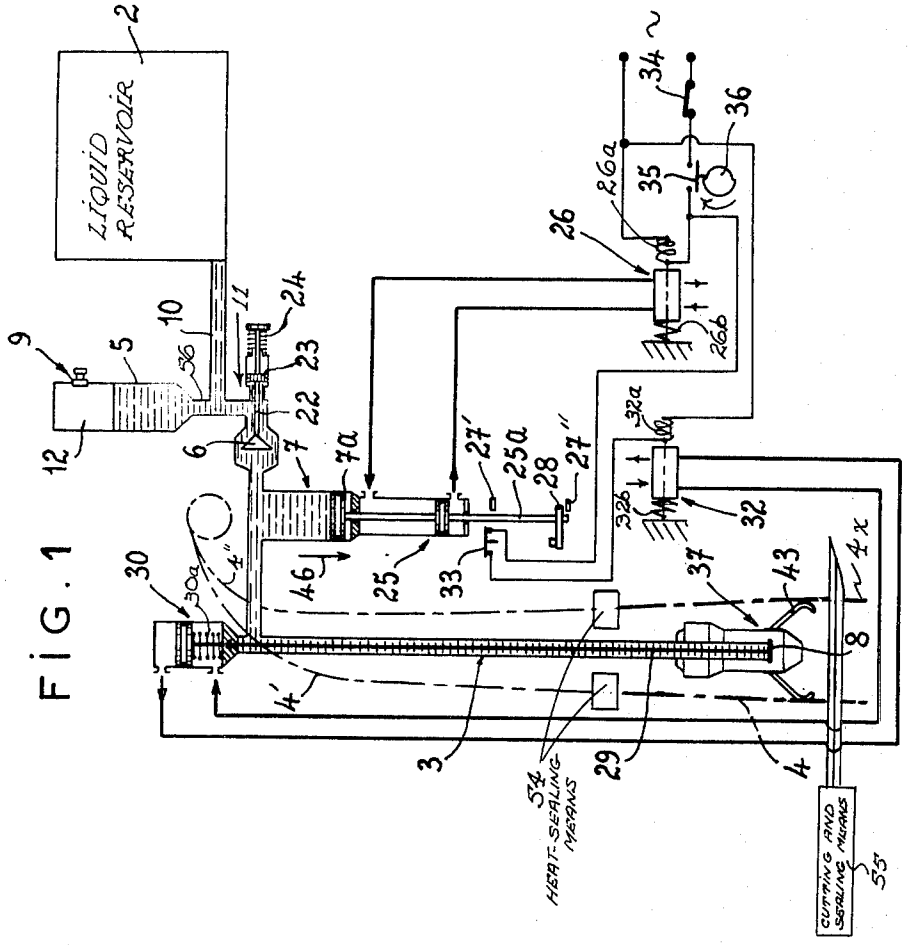
LIQUID RESERVOIR
2
9
5
10
11
12
6
7
7a
22
23
24
25
25a
26
26a
26b
27'
27''
28
29
30
30a
32
32a
32b
33
34
35
36
37
43
46
3
4
4'
4''
4x
8
54
HEAT-SEALING MEANS
CUTTING AND SEALING MEANS
55

FIG. 4

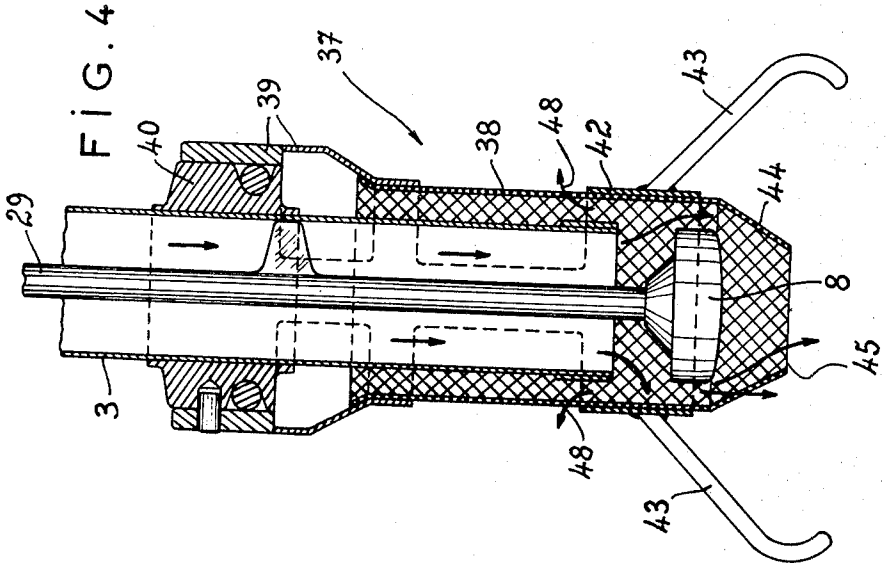
29
40
39
37
38
48
42
43
44
8
45
3
48
43

FIG. 2

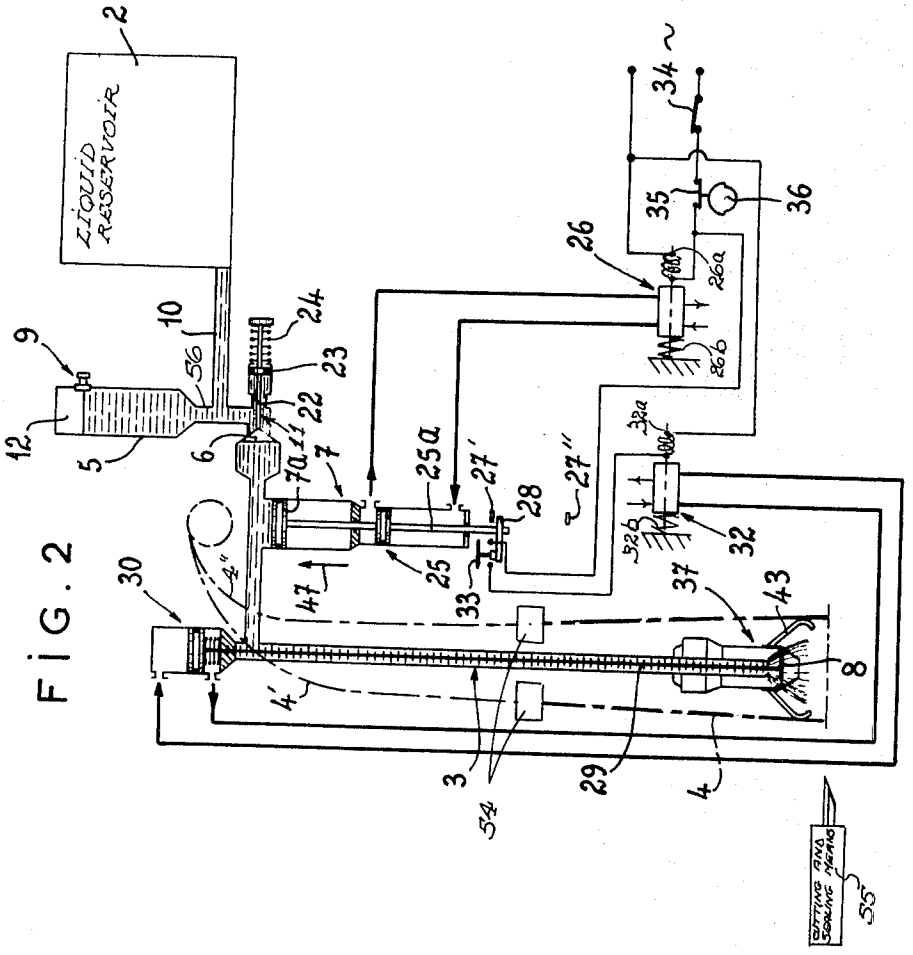
LIQUID RESERVOIR
2
9
12
5
56
10
24
23
22
6
11
7a
7
25a
27'
28
27''
25
33
47
30
4''
4'
3
54
29
4
37
43
8
26
26a
26b
35
36
34
32a
32b
32
CUTTING AND SEALING MEANS
55

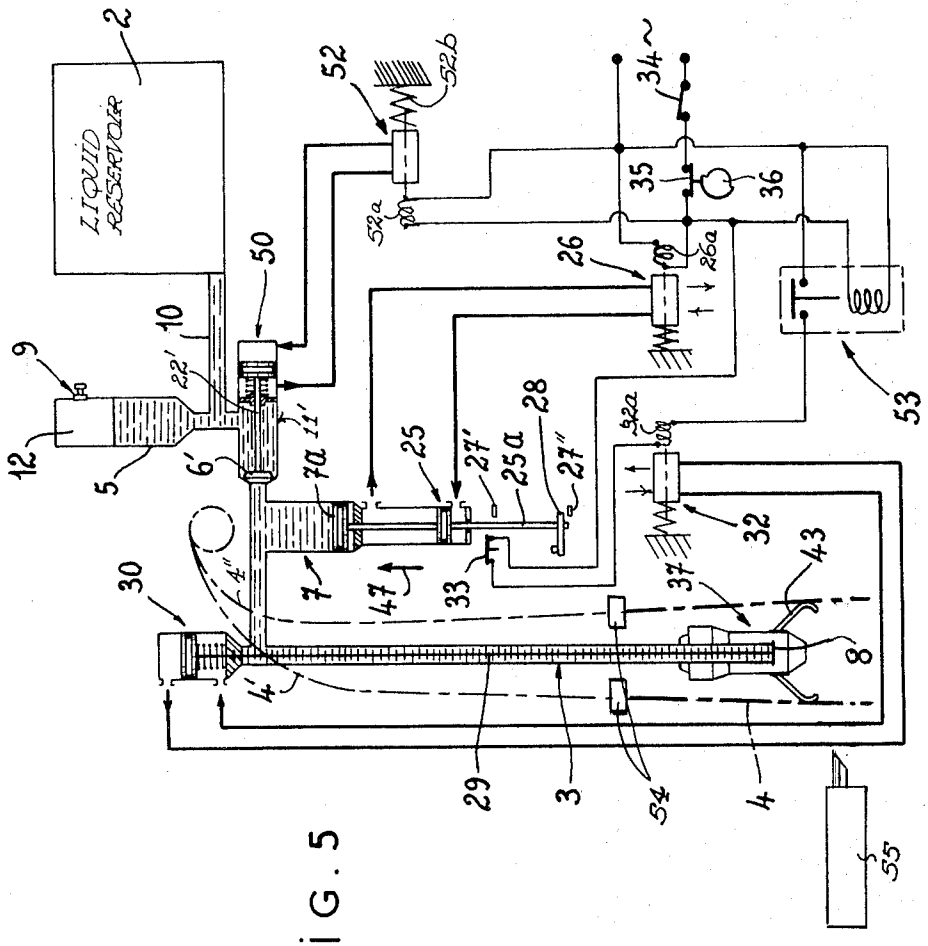
LIQUID RESERVOIR
2
52
52b
52a
34
35
36
26
26a
50
10
22'
9
12
5
6'
11'
7a
25
27'
25a
28
27''
32a
32
43
37
33
47
7
4''
30
4'
8
29
3
54
4
55
53

FIG. 5

METERING DISPENSER FOR FLOWABLE MATERIAL

SPECIFICATION

1. Field of the Invention

My present invention relates to a system for dispensing metered quantities of flowable material, such as liquids or viscous media, e.g. for the purpose of filling such material into a series of containers successively formed from a surrounding plastic sheath.

2. Background of the Invention

It is known (see, for example, U.S. Pat. No. 3,077,063) to form such containers from a pair of thermoplastic webs which are then heat-sealed to each other along their edges and subsequently cut into bags closed at both ends in the cutting operation. The flowable medium exits from a tube whose lower end forms a nozzle with an outlet within the sheath constituted by the webs. As the sheath advances downwardly, the closed-bottom section thereof underneath the nozzle outlet is filled with a predetermined quantity of the medium before being severed from the body of the sheath and sealed at the bottom, with simultaneous formation of a transverse seam at what is now the lower end of the sheath.

BACKGROUND OF THE INVENTION

An object of my present invention is to provide an improved metering dispenser for the aforedescribed system which accurately determines the amount of flowable medium to be discharged from the nozzle during each operating cycle, e.g. with a tolerance of ± 1 g for 1-liter doses dispensed at a rate of 2,000 liters per hour.

A more particular object is to provide means in such a dispenser for preventing the ingress of air into a conduit carrying the medium from its supply source to the nozzle outlet.

A further object is to eliminate shock waves which could be generated, especially in the case of a dispenser for a free-flowing liquid (e.g. milk), upon a sudden cutoff of the flow as required for a precise metering of the discharged quantity.

It is also an object of my invention to provide means at the dispenser outlet for inhibiting any foaming action which might otherwise occur with some liquids and which could facilitate the entry of outside air into the nozzle.

SUMMARY OF THE INVENTION

A dispenser embodying my invention comprises two valves inserted in tandem in the conduit carrying the flowable medium (referred to hereinafter, for convenience, as liquid) from the supply source to the nozzle outlet, i.e., a first or upstream valve and a second or downstream valve. A metering chamber, communicating with this conduit at a location between these two valves, contains a piston which is reciprocable therein for filling and emptying same at alternate intake and discharge strokes under the control of a timer. During an intake stroke, the first valve is open and the second valve is closed to allow liquid from the source to enter the metering chamber; during a discharge stroke, the valve positions are reversed so that liquid from the chamber is ejected through the nozzle.

In order to make the dispensed quantity independent of the operating speed of a cam or the like causing the periodical reciprocation of the metering piston, I prefer to control the timing of the closure of the downstream valve through a switch actuated by the piston toward the end of its discharge stroke.

The piston and the downstream valve may be operated by respective double-acting jacks whereas the upstream valve could be of the suction type openable in response to an incipient intake stroke of the piston and closable in response to termination of that stroke. This arrangement ensures closure of the upstream valve prior to opening of the downstream valve if the latter is timed to open at the beginning of each discharge stroke. However, it is also possible to provide a third double-acting jack for the upstream valve and, if the operating circuit thereof is connected in parallel with that of the piston, to include delay means in the operating circuit of the downstream valve for the purpose of retarding the opening thereof pending closure of the downstream valve, thereby preventing the passage of any unmetered quantity of liquid through the conduit as could occur if both valves were simultaneously open.

According to another important feature of my invention, the conduit is provided ahead of the upstream valve with a branch leading to a pressure accumulator, specifically a closed vessel having a lower portion connected to that branch and an upper portion provided with venting means for establishing therein an air cushion of predetermined volume. The pressure accumulator absorbs any shock waves that would otherwise be generated upon a sudden closure of the upstream valve as soon as the proper quantity of liquid has been drawn into the metering chamber. Advantageously, the liquid-storing capacity of the pressure accumulator is smaller than the pumping capacity of the metering piston so that the vessel is substantially fully drained during the intake stroke and no liquid is allowed to reside for a prolonged period in the pressure accumulator.

In the case of liquids of relatively low viscosity having a foaming tendency, I prefer to surround the downstream wave within the nozzle by a splash shield.

BRIEF DESCRIPTION OF THE DRAWING

The above and other features of my invention will now be described in detail with reference to the accompanying drawing in which:

FIG. **1** is a somewhat diagrammatic view of a liquid-dispensing system embodying my improved metering dispenser;

FIG. **2** is a view similar to FIG. **1**, showing the system in a different operating position;

FIG. **3** is a sectional detail view of part of a pressure accumulator included in the system of FIGS. **1** and **2**;

FIG. **4** is a sectional detail view of a nozzle included in that system, the nozzle being provided with a foam-inhibiting splash shield; and

FIG. **5** is a further view similar to FIGS. **1** and **2**, illustrating a modification.

SPECIFIC DESCRIPTION

The system shown in FIGS. **1** – **4** comprises a liquid reservoir **2**, e.g. a milk tank, whose outlet **10** forms part of a conduit constituted in its downstream portion by a vertical nozzle **37**. The nozzle is enveloped by a tubu-

lar sheath 4 from two webs 4', 4'' of thermoplastic material whose edges are fused together by heat-sealing means 54 and which, at a level just below the nozzle outlet 45, pass a station 55 operated periodically to sever a portion 4*x* from the sheath and to seal the two adjoining transverse edges on section 4*x* and the body of sheath 4.

Conduit portion 10 has a branch 56 which opens from below into a pressure accumulator 5 consisting of a closed upright vessel whose upper part is occupied by an air cushion 12, this part being normally sealed against the atmosphere by a venting valve 9 more fully illustrated in FIG. 3. As shown in that Figure, valve 9 includes a tubular body 13 whose bore 14 forms a frustoconical seat 15 for a ball 17 normally obstructing an orifice 16; ball 17 is forced onto its seat by a core 18 rigid with a screw cap 19 matingly engaging the threaded outer surface of body 13. Upon the losening or removal of this screw cap, orifice 16 communicates with a lateral port 20 in the wall of valve body 13.

A suction valve 11 is inserted in conduit 3, 10 downstream of branch 56 but upstream of another branch 7 forming a metering chamber, this chamber containing a piston 7*a* controlled by a double-acting pneumatic or hydraulic jack 25. Another valve 8 within nozzle 37 normally obstructs the lower end of tube 3 and is rigid with a rod 29 passing through that tube into the cylinder of another double-acting jack 30 provided with an upwardly acting biasing spring 30*a*. Valve 11 has a stem 22 with two heads 6, 23 of the same effective area so that the pressure in vessel 5 and line 10 has no influence on the position of this valve. A biasing spring 24 tends to hold the valve close by urging its head 6*a* against a frustoconical seat therefor.

The operation of valves 11 and 8 as well as metering piston 7*a* is controlled by a timer which includes a rotary cam 36 synchronized with the cutting and sealing station 55. A switch 35 controlled by cam 36, open during half a cycle as illustrated in FIG. 1, lies in series with a master switch 34 in a circuit extending from a current source to two solenoids 26*a* and 32*a* of a pair of valves 26 and 32 which are shiftable to reverse the flow of working fluid to jacks 25 and 30, the valves being normally held by restoring springs 26*b* and 32*b* in positions establishing a fluid flow as indicated by the arrows of FIG. 1. In that position, piston 7*a* is lowered (arrow 46) to take in a predetermined liquid quantity from vessel 5 and supply line 10, the valve 11 being opened by the suction of the descending piston 7*a* against the force of its biasing spring 24 which recloses the valve as the intake stroke of the piston comes to a halt. At the same time the jack 30 raises the valve 8 into its blocking position in which no liquid can leave the nozzle 37. It is at this instant that station 55 operates to cut a previously filled container from sheath 4.

The energizing circuit for solenoid 42*a* is in series with a normally closed switch 33 which is opened by a lug 28 on a piston rod 25*a* of jack 25 upon the approach of piston 7*a* to its upper dead-center position, the two limiting positions of this piston being determined by two stops 27' and 27''.

Before the system is taken into operation, the maximum liquid level in pressure accumulator 5 is adjusted by briefly opening the vent 5 whereby the liquid rises to that level and begins to overflow via port 20. The vent 9 is then reclosed and switch 34 is closed to start the first timing cycle. With cam 36 opening the switch 35 as shown in FIG. 1, piston 7*a* descends so that valve 11 opens; valve 8 is held closed by the jack 30. Upon the completion of this intake stroke, cam 36 reopens the switch 35 so that valves 26 and 32 reverse the fluid flow through jacks 25 and 30 whereby piston 7*a* begins to rise (arrow 47, FIG. 2) and valve 8 unblocks the nozzle outlet to discharge the liquid from chamber 7 into a waiting bag 4*x*. The liquid flow continues until the piston opens the switch 33, the resulting back pressure arresting its ascent even if cam 36 has not yet reopened the switch 35. The reopening of that switch restores the condition shown in FIG. 1, with another descent of piston 7*a* (arrow 46) and the instant reopening of valve 11 whereby liquid from vessel 5 and line 10 streams into the metering chamber 7. Because of the suction developing in that chamber, most but not all of its contents is drained into the chamber 7 at this point. The subsequent reclosure of valve 11 allows the liquid still in motion within line 10 to flow into vessel 5 and to fill that vessel to the level determined by the position of vent 9; thus, the opening and closure of valve 11 proceeds without any appreciable shocks.

As illustrated in FIG. 5, the balanced suction valve 11 of FIGS. 1 and 2 may be replaced by a valve 11' whose rod 22' forms part of a double-acting jack 50 and carries a head 6' for blocking the entrance to metering chamber 7. Jack 50 is controlled by a solenoid valve 52 whose winding 52*a* is energized in parallel with winding 26*a* of valve 26 upon closure of cam switch 35; valve 52 has a restoring spring 52*b* effective to reverse the fluid flow into jack 50 (as compared with that indicated in FIG. 5) upon the opening of switch 35. In order to ensure that the valve 11' be closed before the valve 8 opens, the energizing circuit of solenoid winding 32*a* further includes the armature of a relay 53 serving as a delay device; closure of switch 35 first energizes the relay 53 which thereupon attracts its armature to actuate the solenoid valve 32.

The preferred consturction of nozzle 37 has been illustrated in FIG. 4. A splash shield in the form of a generally cylindrical wire mesh 38 surrounds the lower end of tube 3 and is in turn surrounded by a solid ring 42 carrying legs 43 which hold the sheath 4 out of contact with the nozzle outlet 45 defined by a furstoconical portion 44 of mesh 38. Upon the opening of valve 8 through the lowering of rod 29, the oncoming liquid can freely flow downwardly through outlet 45 and also through the interstices of mesh portion 44; some of it may rise above the ring 42 and pass through the interstices of the upper mesh portion as indicated by arrows 48. The mesh absorbs part of the kinetic energy of the liquid and, as I have found, effectively prevents its foaming.

If the liquid is of high viscosity, the anti-foaming splash shield 38 (connected with tube 3 via a collar 40 and a sleeve 39) may be omitted.

It will be apparent that the valves valves 26 and 52 could be replaced by a single solenoid valve.

I claim:

1. A dispenser for a flowable medium comprising:

a source of supply for said flowable medium;

nozzle means forming an outlet for said medium;

a conduit extending from said source to said outlet;

a first valve and a second valve inserted in tandem in said conduit;

a metering chamber communicating with said conduit at a location between said valves;
a metering piston reciprocable in said chamber for filling and emptying same by alternate intake and discharge strokes; and
timing means controlling the operation of said piston and said valves with opening of said first valve and closure of said second valve during an intake stroke and with closure of said first valve and opening of said second valve during a discharge stroke;
said timing means including switch means controlled by said piston for closure of said second valve toward the end of said discharge stroke and further including a double-acting first jack coupled with said piston, a double-acting second jack coupled with said second valve, a first circuit controlling the admission of pressure fluid to said first jack, and a second circuit including said switch means controlling the admission of pressure fluid to said second jack;
said first valve being a suction valve openable in response to an incipient intake stroke of said metering piston and closable in response to termination of said intake stroke, said first valve being a body with two balanced heads on opposite sides of an inlet for substantially canceling the effect of the supply pressure of said source upon the position of said body, the latter being provided with biasing means urging same into a closure position.

2. A dispenser for a flowable medium comprising:
a source of supply for said flowable medium;
nozzle means forming an outlet for said medium;
a conduit extending from said source to said outlet;
a first valve and a second valve inserted in tandem in said conduit, said second valve underlying an end of said conduit above said outlet;
an anti-foaming splash shield surrounding said second valve ahead of said outlet, said splash shield including a generally cylindrical screen coaxial with said outlet and a solid ring embracing an annular zone of said screen around said end of said conduit;
a metering chamber communicating with said conduit at a location between said valves;
a metering piston reciprocable in said chamber for filling and emptying same by alternate intake and discharge strokes; and
timing means controlling the operation of said piston and said valves with opening of said first valve and closure of said second valve during an intake stroke and with closure of said first valve and opening of said second valve during a discharge stroke.

3. A dispenser for a flowable medium comprising:
a source of supply for said flowable medium;
nozzle means forming an outlet for said medium;
a conduit extending from said source to said outlet;
a first valve and a second valve inserted in tandem in said conduit, the latter being provided with a branch upstream of said first valve;
a metering chamber communicating with said conduit at a location between said valves;
a metering piston reciprocable in said chamber for filling and emptying same by alternate intake and discharge strokes;
a pressure accumulator with a storage capacity for said medium smaller than the pumping capacity of said metering piston, said pressure accumulator including a closed vessel having a lower portion connected to said branch and having an upper portion provided with venting means for establishing therein an air cushion of predetermined volume; and
timing means controlling the operation of said piston and said valves with opening of said first valve and closure of said second valve during an intake stroke and with closure of said first valve and opening of said second valve during a discharge stroke.

4. A dispenser as defined in claim **3** wherein said nozzle means is provided with an anti-foaming splash shield surrounding said second valve ahead of said outlet.

5. A dispensr as defined in claim **4** wherein said second valve underlies an end of said conduit above said outlet, said splash shield comprising a generally cylindrical screen co-axial with said outlet and a solid ring embracing an annular zone of said screen around said end of said conduit.

6. A dispenser as defined in claim **3** wherein said timing means comprises switch means controlled by said piston for closure of said second valve toward the end of said discharge stroke.

7. A dispenser as defined in claim **6** wherein said timing means further comprises a double-acting first jack coupled with said piston, a double-acting second jack coupled with said second valve, a first circuit controlling the admission of pressure fluid to said first jack, and a second circuit including said switch means controlling the admission of pressure fluid to said second jack.

8. A dispenser as defined in claim **7** wherein said first valve is a suction valve openable in response to an incipient intake stroke of said metering piston and closable in response to termination of said intake stroke.

9. A dispenser as defined in claim **8** wherein said first valve has a body with two balanced heads on opposite sides of an inlet for substantially canceling the effect of the supply pressure of said source upon the position of said body, the latter being provided with biasing means urging same into a closure position.

10. A dispenser as defined in claim **7** wherein said timing means further comprises a double-acting third jack coupled with said first valve and a third circuit controlling the admission of pressure fluid to said third jack.

11. A dispenser as defined in claim **10** wherein said first and third circuits are connected in parallel for simultaneous actuation of said first and third jacks, further comprising delay means in said second circuit for retarding the opening of said second valve pending closure of said first valve.

* * * * *