United States Patent [19]

Albany

[11] **3,729,874**

[45] **May 1, 1973**

[54] **VENTILATED AWNING**

[76] Inventor: **Stanley J. Albany,** 9951 Voyager Circle, Huntington Beach, Calif. 92646

[22] Filed: **Sept. 22, 1969**

[21] Appl. No.: **859,649**

[52] **U.S. Cl.** **52/78,** 52/75, 52/473
[51] **Int. Cl.** **E04f 10/08**
[58] **Field of Search**..... 52/74–78, 473–478, 529–530

[56] **References Cited**

UNITED STATES PATENTS

2,839,795	6/1958	Ruggles	52/78

FOREIGN PATENTS OR APPLICATIONS

218,655	11/1958	Australia	52/75
551,158	1/1958	Canada	52/77
241,263	11/1962	Australia	52/78

Primary Examiner—Henry C. Sutherland
Assistant Examiner—Leslie A. Braun
Attorney—Allan D. Mockabee

[57] **ABSTRACT**

A louver awning of resilient material wherein each louver has an upwardly rolled upper edge and a downwardly rolled lower edge, the louvers being supported between spaced stringers, the stringers having louver receivers formed in upstanding edges thereof, one receiver being in the form of a curved socket to receive one rolled edge, the other receiver being a curved projection to receive the other rolled louver edge, the louvers being reversible about their longitudinal axes to expose first one side then the other to exterior view, and the louvers being held by their receivers under transverse tension to hold them in place without rattling.

1 Claim, 4 Drawing Figures

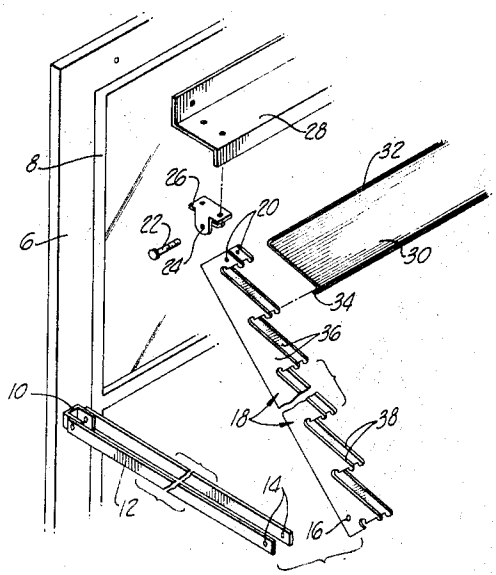

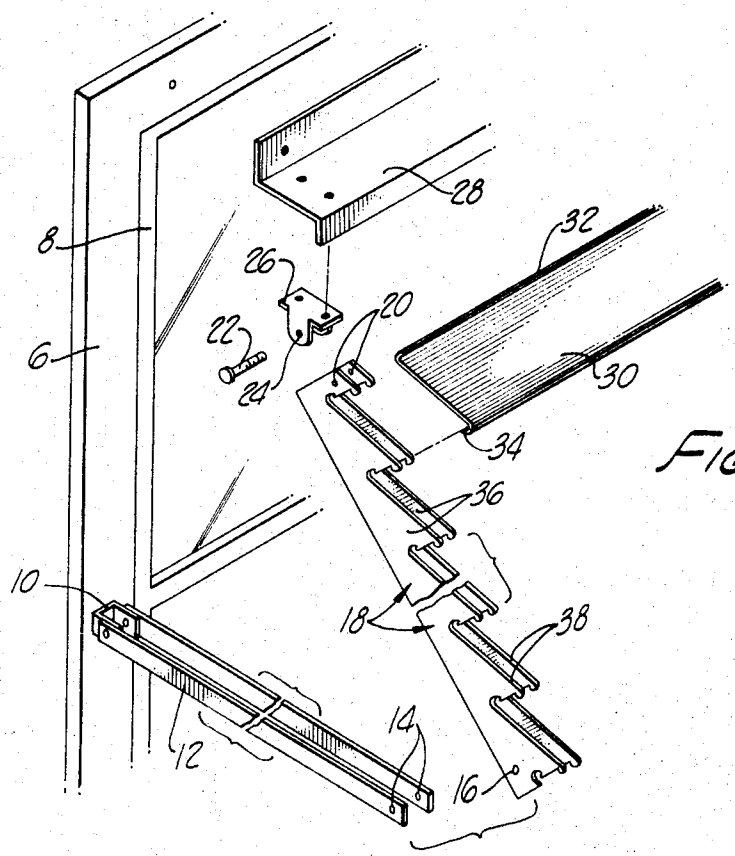

FIG. 1.



FIG. 4.

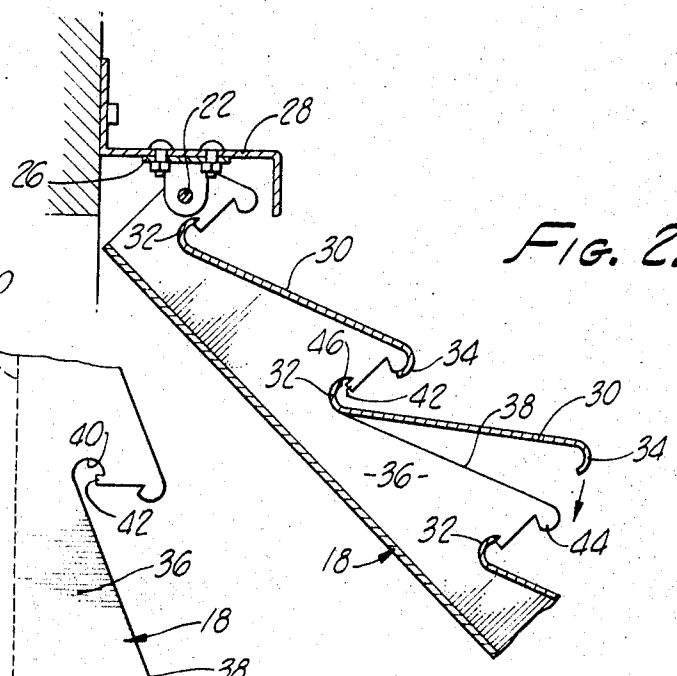

FIG. 2.

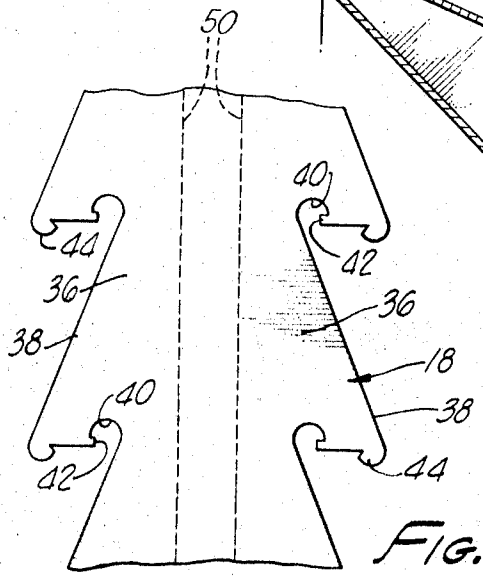

FIG. 3.

INVENTOR
STANLEY J. ALBANY
BY
ATTORNEY

VENTILATED AWNING

PRIOR ART

The following prior art was known to me at the time of my application for patent:

U.S. Pat. No. 2,814,079, issued Nov. 26,1957 to V.Van Fleet et al.

U.S. Pat. No. 3,015,135, issued Jan. 2,1962 to R.K. Dean et al.

U.S. Pat. No. 3,098,267, issued July 23,1963 to R.K. Dean et al.

U.S. Pat. No. 3,216,538, issued Nov. 9,1965 to L. C. Miller

U.S. Pat. No. 3,228,159, issued Jan. 11, 1966 to F.Vecchiarelli et al.

U.S. Pat. No. 3,263,735, issued Aug. 2,1966 to F.Vecchiarelli et al.

U.S. Pat. No. 3,336,705, issued Aug. 22,1967 to F.Vecchiarelli et al.

Of these patents, Vecchiarelli et al. U.S. Pat. No. 3,228,159 and the patents to Dean show louvers with both edges rolled downwardly. These louvers of course cannot be reversed in position to bring their undersides upward so that the unweathered and cleaner looking paint will be exposed to view after the original upwardly disposed side has become weathered and unsightly. Also, they are incapable of being placed under tension in the manner of my louver with its oppositely rolled upper and lower edges.

The patent to Van Fleet shows upwardly and downwardly rolled edges but according to the disclosure and the statement of the patentee, the louvers cannot be mounted by rolling the upper edges into their receivers and then snapping the lower edges over their receivers, it being necessary in Van Fleet to slide the louvers endwise with the upper edges entering the slots **44** in the stringers, and the lower edges receiving endwise the rounded projections **42** of the receivers. Also, the structure disclosed by Van Fleet does not permit reversal of the louvers.

DISCLOSURE

The principal objects of the invention are to provide an awning construction of louvers, preferably of a thin light resilient metal, such as aluminum, which louvers are so constructed that they can be conveniently mounted upon supporting stringers and held in position under transverse tension to secure them tightly against rattling in the wind and displacement, wherein the louvers are oppositely rolled insofar as their upper and lower edges are concerned, and their edges rolled substantially identically so that the louvers can be reversed about their longitudinal axis to present one or the other side upwardly so that when painted, the upper side which becomes weathered after a period of time, can be disposed downwardly to present to the weather and to exterior view the better preserved painted coating of the underside, to provide louvers which are supported in spaced overlapping relationship to permit light between them but to provide upwardly rolled upper edges which serve as rain stops, and downwardly rolled lower edges which permit rain runoff.

The other objects will more fully appear from the following description in connection with the accompanying drawing:

FIG. **1** is a digrammatic view of a portion of a window and frame with an embodiment of the invention in conjunction therewith in exploded form;

FIG. **2** is a vertical sectional view through a portion of an awning on a somewhat larger scale;

FIG. **3** is a plan view of a portion of one of the louver supporting stringers indicating the manner of its formation and the shape thereof;

FIG. **4** is a fragmentary detail of a portion of a louver edge showing a slightly different form of edge.

In the drawing there is shown a window frame **6** within which is located a window sash **8**. Suitably secured to the frame **6** is a bracket **10** to which is pivotally connected a brace **12**. The outer end of the brace is apertured as at **14** to receive a pivot pin which also passes through complementary apertures **16** in the lower end of a diagonally disposed louver supporting stringer **18**. The upper end of the stringer is provided with apertures **20** to receive a pivot bolt **22** which is adapted to extend through apertures **24** in a supporting bracket **26** which may be connected to a mounted plate **28** suitably secured to the upper cross member of the window frame **6**.

The stringers **18** are adapted to support a plurality of horizontally extending louvers **30**. Each louver has an upwardly rolled upper edge **32** and a downwardly rolled lower edge **34**. It is preferred that the two edges be identical or nearly so. Each stringer **18** comprises a pair of side walls **36** having a series of diagonally disposed upper edge portions **38**. At the upper end of each edge portion **38** is a curved or rounded socket **40** having a stop **42** extending into it at one end of the curve. At the other end of each straight diagonal portion **38** is a rounded projection **44**. The curvature of the socket **40** is preferably the same as the outer curvature of the upper rolled edge **32** of each louver, and the curvature of the projection **44** is preferably the same as the inner curvature of the downwardly rolled lower louver edge **34**. A socket **40** and a projection **44** provide receivers for the two rolled edges of each louver.

A louver is inserted as shown in FIG. **2**. Its lower edge is tilted upwardly somewhat away from the diagonal stringer edge **38**, the upper rolled edge **32** of the louver is inserted into the rounded socket **40** and the louver is then rotated in a clockwise direction as viewed in FIG. **2** until the extreme edge **46** of the rolled louver edge **32** engages the stop **42**. At this point the louver has not yet reached the position where its lower rolled edge **34** has snapped into position around the receiver projection **44**. However, the metal can be flexed transversely so that said rolled edge **34** will snap over the rounded projection **44**, holding the louver tightly in place and under transverse flexure so that it will remain in position without rattling.

As viewed in FIG. **2**, it will be seen that the lower rolled edge of one louver lies outwardly with respect to and above the upper rolled edge of the louver therebelow, or diagonally downwardly therefrom. The lower edge of one louver is spaced from the upper edge of the next adjacent louver to provide ventilation and light between the louvers. This spacing is not great and unless precipitation is accompanied by wind, there is no great likelihood of moisture entering between the louvers and into an open window. However, rain is frequently accompanied by wind, and in order to

prevent the blow by of rain to the underside of the awning and into the window, the upper edge of each louver is rolled upwardly as at **32**. In this manner adequate light and ventilation are provided with the prevention of the entrace of practially all precipitation.

By reason of the fact that the edges of the louvers are rolled oppositely and approximately alike, the louvers can be reversed so that their original lower surface can be disposed upwardly. This is of considerable value since the louvers are painted and the original upper sides eventually become unsightly because of their exposure to the sun and other weather conditions. Therefore, when the louvers are reversed in position, their fresher looking undersides can be disposed upwardly and outwardly where they are more exposed to view, as well as providing a practically new coat of protection against the weather.

In FIG. **4** there is shown a louver edge **34A** which is slightly reversely rolled to faciltate snapping of the lower edge of the louver over the rounded projection **44**. If used this feature constitutes a very slight departure from the general curvature of the edge and therefore does not interfere with reversal of the louver as mentioned above.

FIG. **3** shows the material of the stringer **18** in the form of a flat sheet and with the projections and sockets or recesses for the louvers stamped therefrom. When the stringer is completed, lateral portions thereof are folded upwardly along the dotted lines **50** to provide the U-shape cross section shown in FIGS. **1** and **2**.

While I have spoken of rolled edges for the louvers, it is to be understood that this term is also meant to include edges which may be angularly bent.

It will of course be understood that various changes can be made in the form, details, arrangement and proportions of the various parts without departing from the spirit of the invention.

I claim:

1. An awning comprising at least one stringer for supporting a plurality of horizontal louvers, said string having an upper end adapted for attachment adjacent a window opening, means for holding the stringer at an angle to the vertical and in an attitude extending downwardly and outwardly from a window, and a plurality of louvers, wherein the improvement comprises: said louvers having oppositely rolled upper and lower longitudinal edges defining open hook forms, said stringer having a plurality of projections thereon and having a plurality of sockets, the projections and sockets comprising receivers for the rolled edges of said louvers, each louver, when mounted on the stringer, having its upper edge turned upwardly and disposed in a receiver socket and having its lower edge turned downwardly and disposed about a receiver projection, the adjacent edges of adjacent louvers being spaced from each other sufficiently so that an arc in continuation of the curvature of one of said adjacent louver edges will not intersect an arc in continuation of the curvature of the other of said adjacent louver edges, whereby direct rays of light will be admitted between said adjacent edges without angular deflection, and the receiver for one rolled edge comprising said socket into which the edge is positioned by rotation of the louver about its longitudinal axis, said socket having a stop therein for limiting rotation of the edge of the louver at a point wherein the other edge is positioned by rotation of the louver about its longitudinal axis, said socket having a stop therein for limiting rotation of the edge of the louver at a point wherein the other edge of the louver is not in position over said receiver projection, and the louver being transversely resilient to permit said other edge to snap over said projection after rotation of the first mentioned edge has been halted by said stop.

* * * * *