April 30, 1935. N. P. HARSHBERGER 1,999,903

APPARATUS FOR AND METHOD OF APPLYING COLORING TO BUILDING MATERIAL

Original Filed Sept. 20, 1930

Fig. 1.

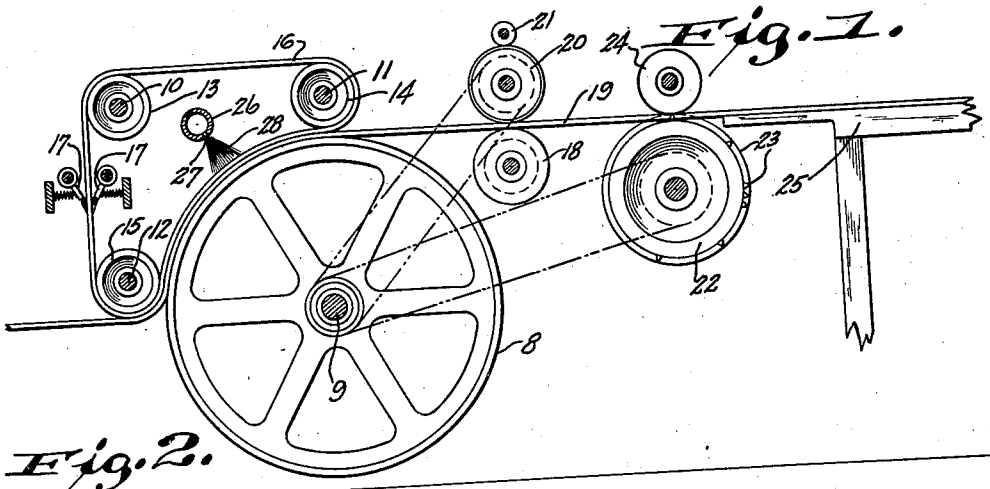

Fig. 2.

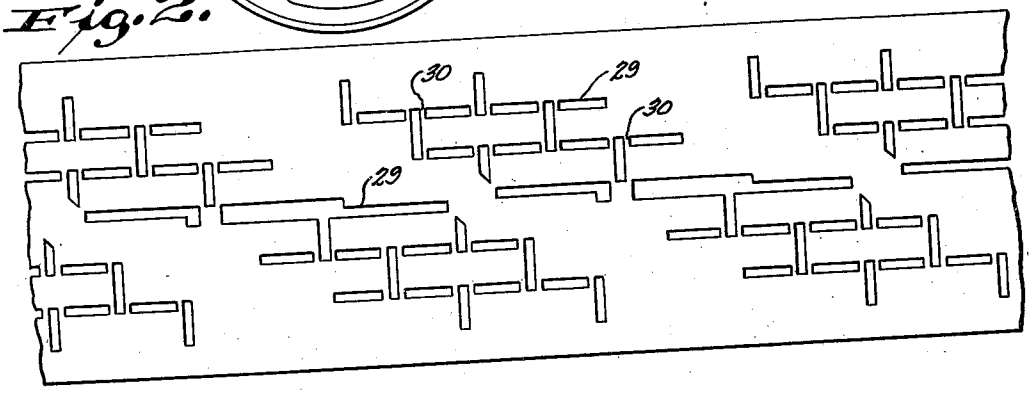

Fig. 5.

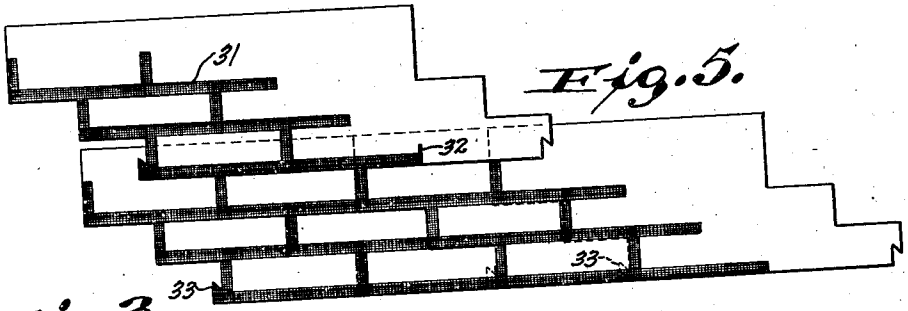

Fig. 3.

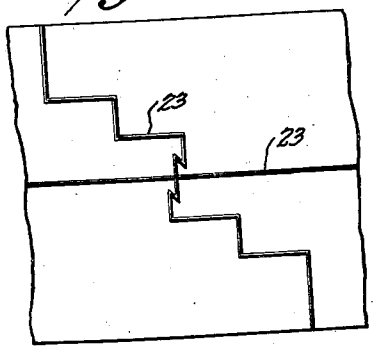

Fig. 4.

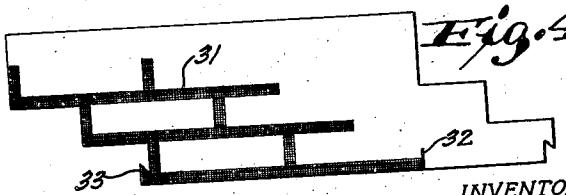

INVENTOR
Norman P. Harshberger
BY
Morsell & Morsell
ATTORNEYS.

Patented Apr. 30, 1935

1,999,903

UNITED STATES PATENT OFFICE

1,999,903

APPARATUS FOR AND METHOD OF APPLYING COLORING TO BUILDING MATERIAL

Norman P. Harshberger, Scarsdale, N. Y., assignor to Bakelite Building Products Co. Inc., New York, N. Y., a corporation of Delaware

Application September 20, 1930, Serial No. 483,310
Renewed November 19, 1932

10 Claims. (Cl. 101—122)

This invention relates to improvements in apparatus for and method of applying coloring to building material.

It is one of the objects of this invention to provide a novel apparatus for and method of applying coloring to a web of composition material to produce designs or lines of demarcation thereon for the purpose of creating an effect of a plurality of individual figures on a single element or strip.

A further object of this invention is to provide an improved method of applying coloring material which involves the application to a travelling web of a quick drying paint, having the general drying characteristics of duco, and as to the broad idea of the use of cellulose material, such as duco, this is described in copending application Serial No. 279,402, filed May 21, 1928.

A more specific object of this invention is to provide an improved apparatus and method of the class described, in which the coloring material is applied in a novel manner through a stencil or the like.

A further object of this invention is to provide an apparatus and method of the class described, which is simple, effective, and well adapted for the purpose described.

With the above and other objects in view, the invention consists of the improved apparatus for and method of applying coloring to building material, and all parts and combinations, as set forth in the claims, and all equivalents thereof.

In the accompanying drawing illustrating one embodiment of the preferred form of the invention, in which the same reference numerals designate the same parts in all of the views:

Fig. 1 is a vertical sectional view taken through the apparatus, parts being broken away, and the supporting frame for the various shafts being omitted inasmuch as this may be of any ordinary construction;

Fig. 2 is a fragmentary plan view of the stencil belt;

Fig. 3 is a plan view of a portion of the cutting roller showing the arrangement of the knives thereon;

Fig. 4 is a plan view showing one type of roofing element which may be formed by the improved method; and

Fig. 5 is a plan view showing an assembly of a plurality of said elements.

Referring to the drawing, the numeral 8 designates a supporting roller which is rigidly mounted on a shaft 9. Said shaft may be journaled in any suitable bearings (not shown). Three other shafts 10, 11 and 12 are arranged in triangular formation with respect to one another, and may also be journaled in a frame in the usual manner. Said shafts have mounted thereon stencil belt supporting rollers 13, 14, and 15 respectively. An endless stencil belt 16 is movable around said rollers. For the purpose of removing any surplus paint from the stencil belt, yieldingly and pivotally mounted scrapers 17 may be employed which engage opposite sides of the belt.

At the right hand side of the roller 8, a supporting roller 18 is rotatably mounted, said roller being adapted to engage the lower side of the composition web 19. A printing roller 20, for a purpose to be hereinafter described, is mounted in vertical alignment with the roller 18 and is adapted to engage the upper surface of the web 19. The printing roller 20 may be fed with ink or the like through the medium of an inking roll 21.

A cutting roller 22 is rotatably mounted beneath the web 19 and is engageable with the lower side thereof. Said roller is provided with knives 23 which are arranged in a desired form as shown in Fig. 3 to cut the web in a predetermined manner. A press roll 24 which is rotatably mounted above the web, is in vertical alignment with the cutting roller 22.

Beyond the roller 22 a table 25 is preferably provided for receiving the cut sections of material after said sections have left a cutting roll.

A pipe 26, or other suitable feeding device, having lower perforations 27 therein, and connected with a source of coloring material under pressure, is mounted betwen the rollers 13, 14 and 15 and is arranged to spray coloring material through the rear of the stencil so that said material may pass thorugh the apertures of the stencil to color the web along desired lines or in desired areas.

In carrying out the improved method, the main supporting roll 8, the printing roll 20 and the cutting roll 22 are driven in any desired manner. An elongated sheet of roofing material, which comprises a fabric base coated with bituminous material and with a layer of granulated mineral, is fed between the stencil belt 16 and a portion of the supporting roll 8. The rotation of the roll 8 will cause movement of the web and also movement of the stencil belt which is in frictional contact therewith. Coloring material 28 is then applied through the medium of the feeding member 26 to the rear of said stencil, and said coloring material will pass through the apertures 29 of the

stencil belt and will adhere to the web below to create a design thereon.

If an ordinary paint or coloring material were employed, it would not be possible to perform the operations of cutting and stacking the cut elements without smearing of the coloring material. For this reason, it is an important part of the method that a quick drying paint be utilized as the web of building material to which the quick-drying paint is applied is usually quite hot after receiving its surfacing of interspersed mineral particles and such will help drive off the volatile solvents of the paint and thereby bring about a rapid initial set. Said paint may be a cellulose mixture, as cellulose ester in a readily volatile solvent, commercially known as duco which possesses the property of drying very rapidly.

Inasmuch as the apertures **29** of the stencil belt must be separated at intervals as at **30** so that portions of the belt will not fall away, the lines of demarcation which will be applied to the web will be broken at intervals. For this reason, the printing roller **20** is employed, said printer having a printing plate extending around its periphery which is formed to apply coloring material to the short sections of the web which are below the portions **30** of the stencil belt. The web will therefore leave the printing roller with continuous lines of demarcation **31** thereon. Next, the web will be severed longitudinally and transversely by the knives **23** of the cutting roller **22** to produce from each side of the web a plurality of figured elements such as are shown in Figure 4.

Each of said elements is then cut inwardly from its lower edge as at **32** to form a slit for engagement with a lug **33**. The shingles produced may be laid as shown in Figure 5 with adjacent elements in the same row having overlapping ends which are interlocked through the lugs and slits **33** and **32**, and with the lower edge of one row above overlapping the upper edge of a row below, as shown in Figure 5, to create an effect of a plurality of brick like figures.

Although the coloring material **28** is shown as applied in the form of a spray, it may also be applied by a soft application roll, or in any other suitable manner. It is further to be understood that the stencil may be formed to produce any type of design on the web, the brick like design shown being merely for the purpose of illustration. All other changes and modifications are also contemplated as may come within the scope of the claims.

What I claim is:

1. Apparatus for manufacturing roofing elements comprising a rotatably mounted roller for supporting a portion of a web of material, an endless stencil for producing a desired design, means for movably supporting said stencil with a portion thereof adjacent to the web supporting part of the roller, means for applying coloring material to said web through the apertures of said stencil, a rotating cutter having knives thereon which are arranged in a definite manner with respect to the design of the stencil, and inter-related driving connections for said web supporting roller and for said rotating cutter to provide for proper engagement of the knives with respect to the design on the web.

2. Apparatus for manufacturing roofing elements comprising a rotatably mounted roller for supporting a portion of a web of material, an endless stencil for producing a desired design, means for movably supporting said stencil with a portion thereof adjacent to the web supporting part of the roller, means for applying coloring material to said web through the apertures of said stencil, a second rotatable color applying device, a rotating cutter in advance of said second color applying device, said cutter having knives thereon which are arranged in a definite manner with respect to the design of the stencil, and inter-related driving connections for said web supporting roller for said second color applying device and for said rotating cutter to provide for proper engagement of the knives with respect to the design on the web.

3. A method of forming and coloring building elements comprising the steps of providing a quick-drying cellulose ester lacquer coating material to permit rapid superimposing of coated elements without smearing, applying said coating material to a traveling mineral coated web while said web is warm, cutting said web into individual colored elements and stacking said elements within a short interval after applying said coating material, the heat of said web aiding in driving off the volatile constitutents of said coating to quicken the set.

4. The method of forming and coloring building material in a continuous operation, comprising applying a quick drying weather resistant coating to a traveling web of building material having thereon a granular, surface roughening material partially imbedded in an adhesive binder to color the exposed granular material, cutting said web into shingle sizes as a part of the continuous process and within a short interval after applying said coating and forming a plurality of surface contacting layers, the rapidity of drying of said coating permitting said contacting without resultant smudging of the coating.

5. A process of making ornamental building elements comprising the steps of providing a moving bituminous coated base presenting interspersed mineral particles partially embedded therein, cutting said base into individual elements, and stacking the cut elements, applying to the exposed portions of the mineral surfacing before stacking a colored coating comprising a quick drying lacquer, to provide an ornamental coating that will remain unsmeared after stacking due to its rapid drying and hardening properties.

6. In a continuous method of coloring roofing elements the steps comprising applying to a hot mineral surfaced bituminous coated sheet a thin cellulosic ester coating in a readily volatile solvent, cutting said sheet into elements and stacking, said hot sheet quickly driving off the solvent and permitting rapid stacking without smudging after said coating has been applied, and said mineral surfacing acting as the principal means of bond for said coating.

7. A method of creating designs including continuous stripes on building material comprising providing a continuously moving web, positioning adjacent the web a stencil apertured to create the design in a broken manner, applying coloring material through the stencil to line at least the portion of the design extending across the line of motion and between the stripes to be made, removing the stencil while the web is still in motion, and subsequently without regard to the longitudinal positioning of the broken design passing the web to another color applicating position and filling in the broken portions of the design to create continuous stripes.

8. The method of continuously forming and ornamenting flexible roofing and siding material,

comprising providing an impregnated fibrous base, coating said base with a binder comprising a bituminous material, spreading coarse granular particles over said binder and partially embedding them in place before the binder has set, applying a color intensifying coating comprising a cellulose ester in a readily volatile solvent between and to the exposed portions of said partially embedded particles to ornament but not destroy their coarse surface, and permitting said coating to set, said coating being anchored to the base by said particles and serving to protect the bituminous binder.

9. In a method of making ornamented roofing and siding material, the steps comprising providing a moving web of water resistant material, presenting a surface adhesive layer, partially embedding granular mineral material in said adhesive layer and securing to the exposed surface portions of said granular particles in a continuous band a color giving coating comprising a quick-drying cellulose ester lacquer.

10. A method of delineating upon a moving strip of roofing and siding material a series of completely outlined brick-like figures, presenting lines of mortar, which comprises applying coloring material to a face of said moving strip in stripes to form the longitudinal and transverse mortar lines of the brick-like figures, forming continuous color strikes extending in the direction of movement of the strip to present certain mortar lines of the bricks, forming lateral color stripes extending across the direction of motion of the strip to present the remaining mortar lines of the bricks, applying a portion of the coloring material through a stencil apertured to create the lateral lines and applying one set of stripes before the other has set.

NORMAN P. HARSHBERGER.