Jan. 13, 1959 G. W. CORNELIUS 2,868,182

FUEL SHUT-OFF APPARATUS

Filed Oct. 17, 1955 3 Sheets-Sheet 1

Fig. 1

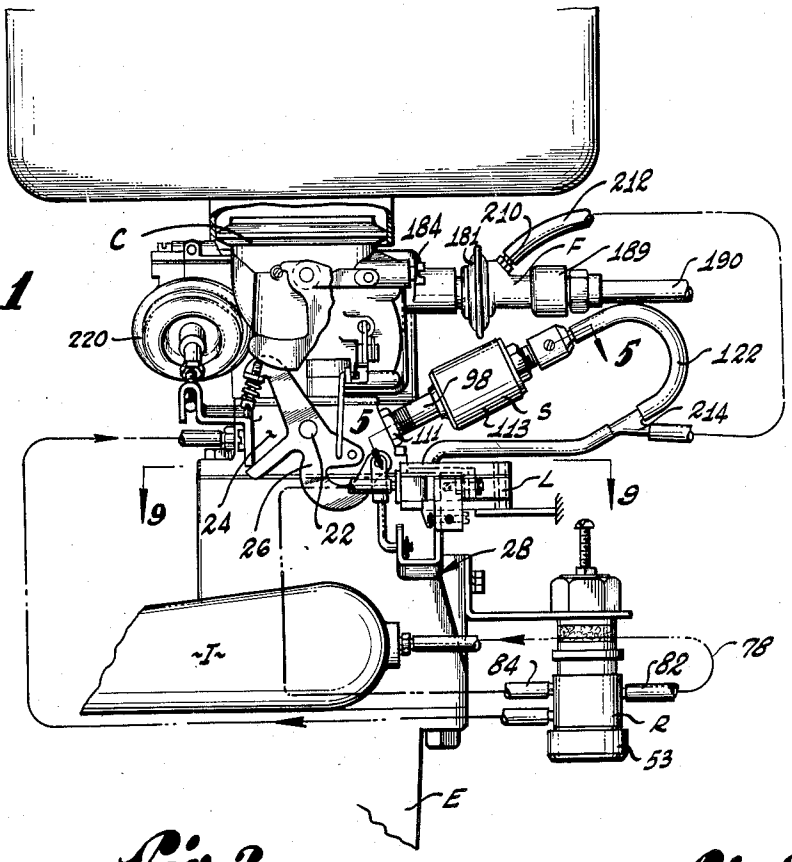

Fig. 2

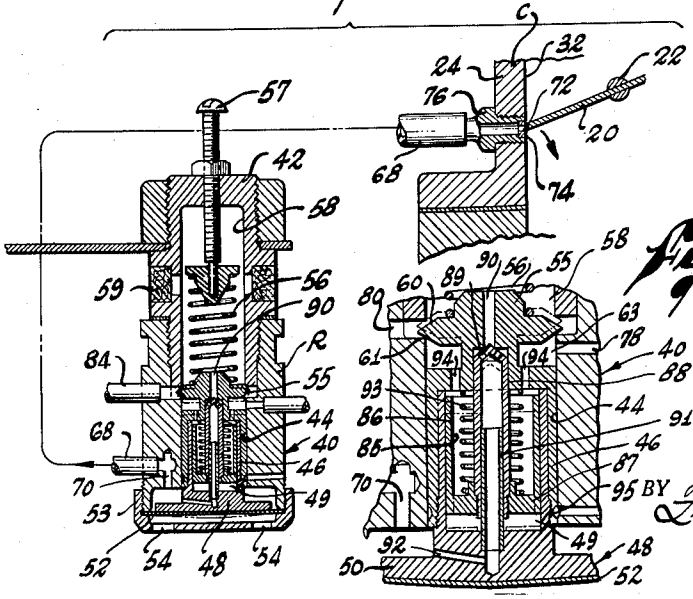

Fig. 3

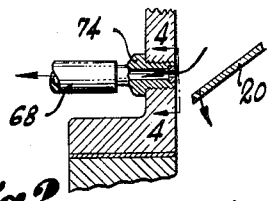

Fig. 2a

Fig. 4

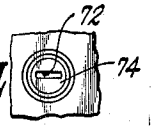

INVENTOR.
GEORGE W. CORNELIUS
BY Fulwider Mattingly & Hunter
ATTORNEYS

Jan. 13, 1959 G. W. CORNELIUS 2,868,182

FUEL SHUT-OFF APPARATUS

Filed Oct. 17, 1955 3 Sheets-Sheet 2

Fig. 5

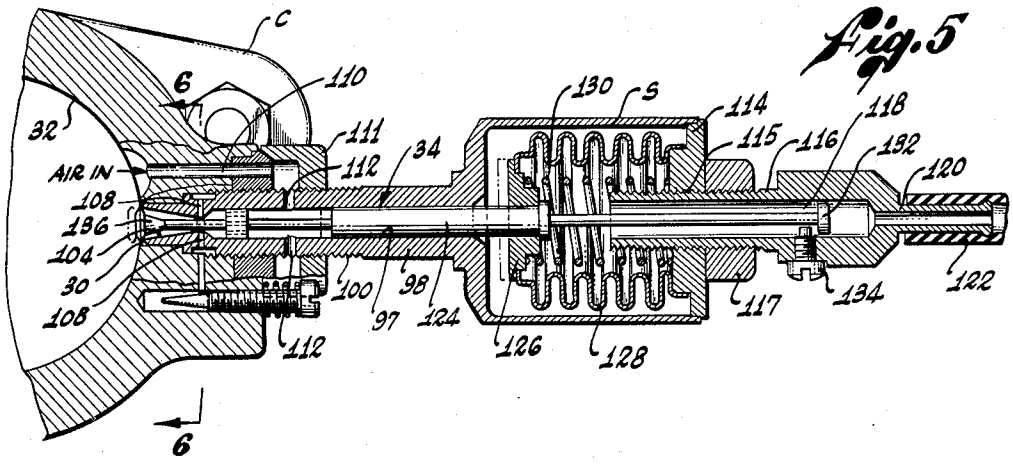

Fig. 6

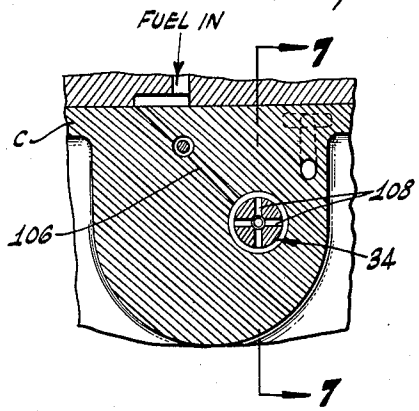

Fig. 7

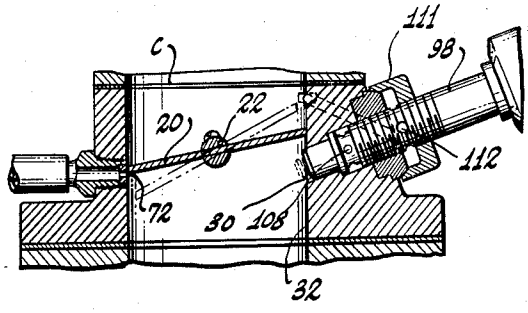

Fig. 8

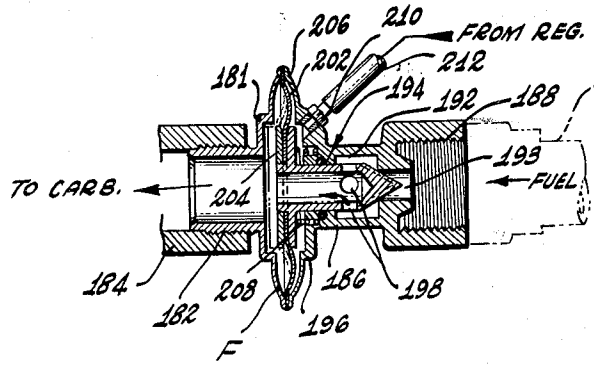

INVENTOR.
GEORGE W. CORNELIUS
BY Fulwider Mattingly & Hunter
ATTORNEYS

Jan. 13, 1959 G. W. CORNELIUS 2,868,182

FUEL SHUT-OFF APPARATUS

Filed Oct. 17, 1955 3 Sheets-Sheet 3

Fig. 9

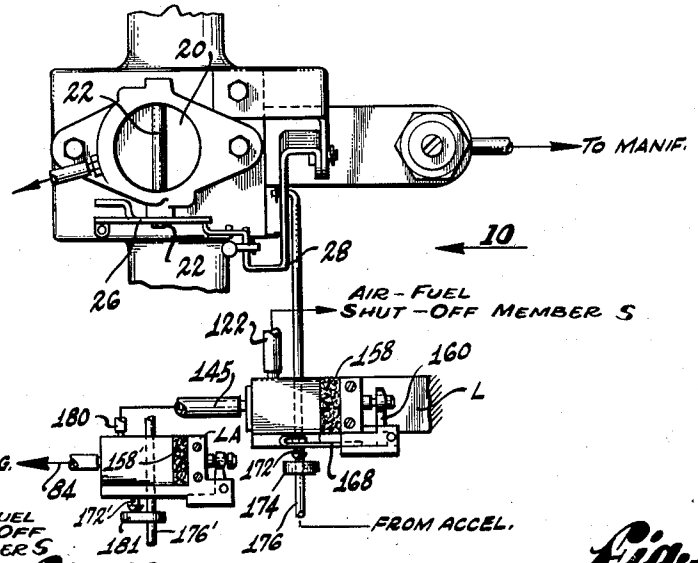

Fig. 12

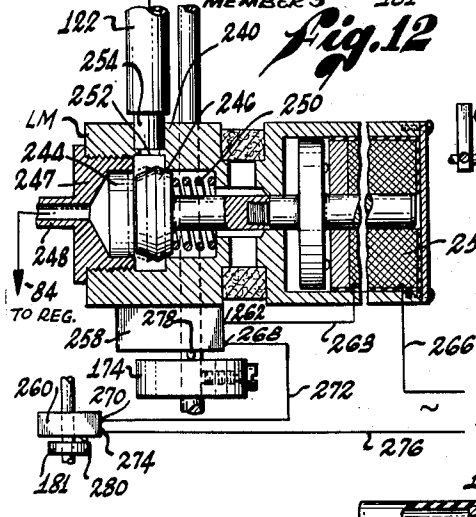

Fig. 10

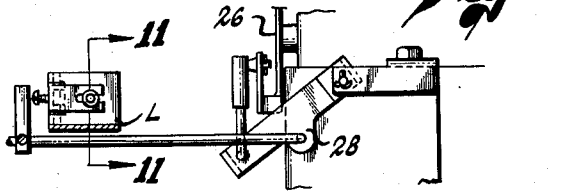

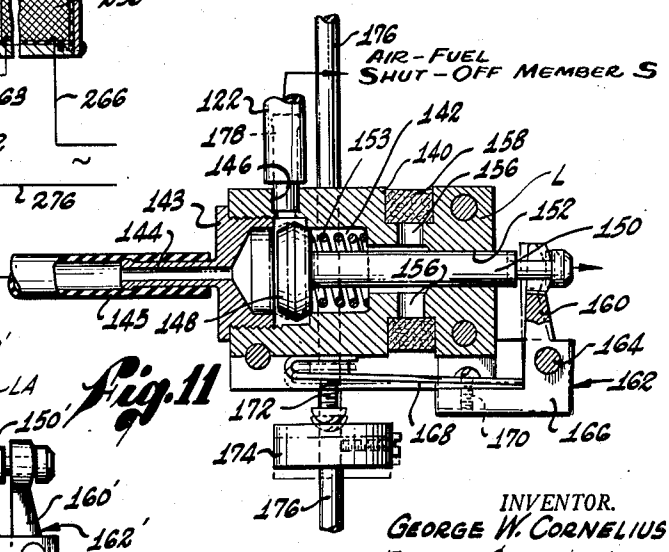

Fig. 11

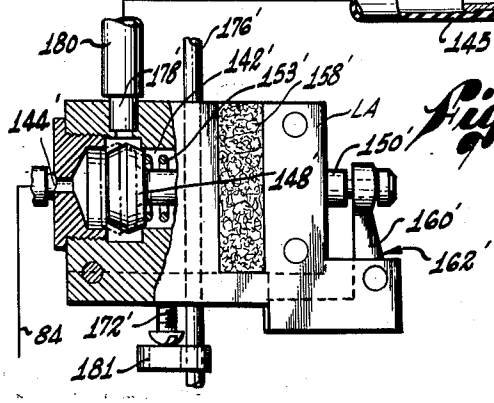

INVENTOR.
GEORGE W. CORNELIUS
BY Fulwider Mattingly & Hunter
ATTORNEYS

United States Patent Office 2,868,182 Patented Jan. 13, 1959

2,868,182

FUEL SHUT-OFF APPARATUS

George W. Cornelius, Portuguese Bend, Calif., assignor to Holley Carburetor Company, Van Dyke, Mich.

Application October 17, 1955, Serial No. 540,817

21 Claims. (Cl. 123—97)

The present invention relates generally to internal combustion engines and more particularly to a novel fuel shut-off apparatus for use therewith.

It is well known that the unburned products of combustion exhausted from internal combustion engines of automotive vehicles constitute a prime source of the so-called "smog" which exists in an around the principal population centers of the country. The harmful effect of this smog upon animate and inanimate objects are likewise very well known. Since the inception of smog and recognition of its detrimental effect upon health and plant life, extensive research has been carried on to find ways and means of diminishing the internal combustion engine's contribution to smog. Much attention has been given to the deceleration cycle, at which time there is no useful work accomplished through the combustion of fuel and at which time, it has been determined, the largest percentage of unburned products of combustion are exhausted from the engine. These unburned products of combustion result from the fact that during the time the engine is being rotated under the momentum of the vehicle at a speed greater than that obtained by the carburetor throttle setting, an extreme vacuum exists within the engine's cylinders and intake manifold. This high vacuum tends to draw fuel from the carburetor into the combustion chambers of the engine. The existence of this high vacum does not permit adequate compression within the combustion chambers to take place and accordingly the fuel fails to undergo complete burning. These unburned hydrocarbons are exhausted into the atmosphere where they contribute to the smog content. Additionally, the existence of these unburned hydrocarbon products form carbon deposits within the combustion chambers and the exhaust valve ports and remainder of the exhaust system. These disadvantages are in addition to the reduction in mileage resulting from the loss of fuel from the carburetor during deceleration. The deceleration period is utilized, to a certain extent, for the purpose of slowing down or contributing braking effect to the vehicle. This is particularly true on grades sufficiently steep to effect an overrunning condition where the forward motion of the vehicle is cranking the engine against compression. It has been found that in cases where the fuel is completely shut off from the engine during periods of deceleration, a greater force is required to crank it at overrunning speeds. It therefore follows that with an effective fuel shut-off the braking effect during deceleration is improved.

In an effort to overcome these disadvantages it has been heretofore-proposed to provide automatic shut-off devices for positively stopping the flow of fuel to an engine during deceleration thereof. The devices which have been employed for this purpose, however, have not met with any notable acceptance. With most of the heretofore-proposed fuel shut-off devices, the fuel has been shut off at a point in the carburetor above the idle metering orifice. With this arrangement the fuel is dried out in the passage or passages between the point of shut-off and

the outlet of the idling well orifice during deceleration. Hence, when the throttle is again opened to resume normal engine operation a time lag is required for the fuel to again commence flow into the intake manifold from the carburetor. During this time lag, the engine will operate with a disagreeable roughness and occasional backfiring and stalling. Another disadvantage with the heretofore-proposed devices of this nature stems from their use of control methods which are too delicate to withstand the normal wear and tear to which the average automobile engine is subjected. Yet another disadvantage results from the tendency of these heretofore-proposed shut-off devices to malfunction after a period of use due to the build-up of fuel-carried foreign material on their working parts.

It is a major object of the present invention to provide an improved form of fuel shut-off apparatus.

Another object is to provide a fuel shut-off apparatus which permits the fuel to commence flowing into the intake manifold from the carburetor prior to or simultaneously with a re-opening of the throttle after a period of deceleration.

A further object is to provide a fuel shut-off apparatus which is extremely sensitive in action and is capable of shutting off and turning on the fuel in the shortest possible time.

An additional object is to provide a fuel shut-off apparatus incorporating novel means for positively rendering it inoperative except during a deceleration period.

It is yet a further object of the invention to provide a fuel shut-off apparatus which is simple in design and rugged of construction whereby it may afford a long and trouble-free service life.

An additional object of the invention is to provide apparatus of the aforedescribed nature which incorporates an auxiliary automatic shut-off device for stopping the flow of fuel to the float chamber of the carburetor at the same time that the flow of fuel within the carburetor throat is shut off.

Yet a further object of the invention is to provide fuel shut-off apparatus that may be readily installed upon the engine of any conventional automotive vehicle.

Another object is to provide fuel shut-off apparatus which is not affected by fuel-carried foreign matter and which requires a minimum amount of maintenance.

These and other objects and advantages of the present invention will become apparent from the following detailed description, when taken in conjunction with the appended drawings, wherein:

Figure 1 is a side elevational view of a preferred form of fuel shut-off apparatus embodying the present invention mounted upon an internal combustion engine;

Figure 2 is an enlarged central vertical sectional view of a regulator device forming a part of said apparatus;

Figure 2*a* is a fragmentary further enlarged view of a detail of said regulator device;

Figure 3 is an enlarged central vertical sectional view of a portion of Figure 2 showing the mode of operation of an element thereof;

Figure 4 is an enlarged vertical sectional view taken on lines 4—4 of Figure 3;

Figure 5 is an enlarged central vertical sectional view taken along line 5—5 of Figure 1, and showing shut-off member forming a part of said apparatus;

Figure 6 is a vertical sectional view taken on line 6—6 of Figure 5;

Figure 7 is a vertical sectional view taken on line 7—7 of Figure 6;

Figure 8 is an enlarged central vertical sectional view of a float chamber shut-off member incorporated in said apparatus;

Figure 9 is an enlarged horizontal sectional view taken on line 9—9 of Figure 1;

Figure 10 is an end view taken from a point designated by the arrow in Figure 9;

Figure 11 is an enlarged vertical sectional view taken along line 11—11 of Figure 10 and showing a limit valve and an auxiliary limit valve incorporated in said apparatus; and

Figure 12 is an enlarged vertical sectional view of a modified form of said limit valve.

General arrangement

Referring to the drawings, a preferred form of fuel shut-off apparatus embodying the present invention is shown mounted upon a conventional internal combustion engine E having an intake manifold I and a conventional carbueretor C. The carbueretor C includes a butterfly-type throttle valve 20 which is keyed to a horizontal shaft 22. This shaft 22 passes through the walls 24 of the carbueretor so as to support the throttle valve 20 for pivotal movement relative thereto. One end of the shaft 22 protrudes through the carburetor walls 24 so as to receive the throttle arm 26. The latter is connected to the accelerator pedal of the automotive vehicle wherein the engine E is mounted by suitable linkage means 28. With this arrangement, and referring to Figures 1, 2, 3 and 7, counterclockwise rotation of the throttle arm 26 will effect movement of the throttle valve 20 from its closed or idling position of Figure 2 towards an open position shown in Figure 3. The throttle valve 20 is normally biased towards its closed position of Figure 2 by suitable spring means (not shown).

The preferred form of fuel shut-off apparatus embodying the present invention includes a regulator valve R shown mounted at the lower right hand side of Figure 1, a limit valve L mounted to the left and above the regulator valve, an auxiliary limit valve LA adjacent the limit valve L, an air-fuel shut-off member S mounted above the limit valve L, and a float chamber shut-off member F mounted above the air-fuel shut-off member. These five members are inter-related and operate in the following general manner. Referring to Figures 5, 6 and 7, the air-fuel shut-off member S cooperates with an idling fuel well or passage 30 formed in the walls 24 of the carburetor C, to effect a positive stoppage of the fuel entering the carburetor throat 32 during deceleration of the engine E. To this end, the air-fuel shut-off member S includes a metering pin, generally designated 34, which is disposed in its open or dotted outline position of Figures 5 and 7 during operation of the engine other than when the latter is decelerating. During deceleration this metering pin will be moved to the right to its closed or solid line position of Figures 5 and 7. The primary sensing means for effecting operation of the air-fuel shut-off member S is the regulator valve R that is shown in detail in Figures 2 and 2*a*. The motivating force for operating the regulator valve R is the intake manifold pressure of the engine E. The limit valve L and the auxiliary limit valve LA cooperate with the regulator valve R in effecting operation of the air-fuel shut-off member S. The limit valve L prevents inadvertent actuation of the air-fuel shut-off member S during open-throttle engine operating conditions where the throttle is closed slightly but is not permitted to close to a full idling position. The auxiliary limit valve LA controls operation of the air-fuel shut-off member S during times when the engine is de-clutched. The float chamber shut-off member F functions simultaneously with the air-fuel shut-off member S and operates to positively cut off the flow of fuel to the float chamber of the carburetor C during deceleration conditions.

The regulator valve R

With particular reference to Figures 2 and 2*a* the regulator valve R includes a body, generally designated 40, and a bonnet 42 which is threaded into the upper portion thereof. The body 40 is centrally formed with a vertical bore 44 wherein is slidably mounted the stem 46 of a valve member 48. The stem 46 is formed with a cylindrical cavity 49 and its lower end is rigidly affixed to the head 50 of the valve member 48, while the underside of this head 50 is secured to a flexible metallic diaphragm 52. The periphery of the diaphragm 52 is secured to the underside of the body 40 by a threaded cap member 53 wherein are formed apertures 54. The upper end of the valve stem 46 is formed with a piston element 55. The piston element 55, and hence the valve member 48, are constantly biased downwardly by a helical compression spring 56. The adjustment of this spring 56 may be controlled by an adjustment bolt 57 which is threadably carried by the upper end of the bonnet 42. The spring 56 and the lower portion of the adjustment bolt 57 are disposed within a cylindrical cavity 58 formed in the bonnet 42. This cavity 58 is in communication with the atmosphere through suitable filter material 59. The piston element 55 includes an upwardly facing sealing surface 60 and a downwardly facing sealing surface 61. The upper surface of the diaphragm 52 is connected to a conduit 68 by a passage 70 formed in the body 40.

As shown in Figure 2, the opposite end of this conduit 68 is connected to the throat 32 of the carburetor C by means of a rectangular opening 72. Conveniently, this opening 72 may be formed in a bushing element 74 that is rigidly affixed to a threaded fitting 76 which is screwed into the carburetor wall 32. The opposite end of the conduit 68 is suitably secured to this fitting 76. As indicated in Figure 2, when the throttle valve 20 is in a closed position the upper portion of the rectangular opening 72 is covered by the edge thereof. The lower portion of this opening 72 left uncovered at this time and is hence in communication with the intake manifold pressure existing below the throttle valve 20. As indicated in Figure 3, when the throttle valve 20 is in an open position, however, the edge of the throttle valve moves downwardly away from this opening and the latter is thereby uncovered. With this arrangement, when the throttle valve 20 is in an open position the diaphragm 52 will be exposed to atmospheric pressure on both its upper and lower surfaces, inasmuch as during the time the rectangular opening 72 is uncovered the upper surface of the diaphragm will be placed in communication with the atmosphere through the conduit 68. When the throttle valve 20 is disposed in its closed position of Figure 2, however, the rectangular opening 72 will be covered and accordingly the upper surface of the diaphragm 52 will be exposed to the intake manifold vacuum existing below the throttle valve. The spring 56 should be so adjusted that it will exert sufficient downward force against the piston element 55 that the diaphragm 52 cannot flex upwardly under the influence of the vacuum existing underneath the throttle valve 20 during idling. The diaphragm should be capable of upward flexure, however, under the influence of the higher vacuums which result during deceleration conditions. Upward movement of the piston element 55 from its solid outline position in Figure 2*a* to its dotted outline position therein serves to place a passage 78 formed in the right side of the body 40 with a second passage 80 formed in the left side of this body by means of an annular space 63 between the upper and lower sealing surfaces 60 and 61, respectively, of the piston element 55. As shown in Figure 1, the first passage 78 is in communication with the intake manifold I by means of a conduit 82. It should be noted that the intake manifold pressure is constantly balanced with regard to its effect upon the vertical move-

ment of the piston element 55, inasmuch as the first passage 78 empties into the annular space 63. The second passage 80 is connected to the auxiliary limit valve LA by means of a conduit 84.

Referring particularly to Figure 2a, in order to obtain a quicker action of the regulator valve R an open-topped cup 86 is slidably disposed within the cylindrical cavity 49 of the stem 46. The bottom wall 87 of this cup is rigidly affixed to an upstanding tube 88. The upper end of this tube 88 is of frusto-conical configuration and is formed with vents 89. The upper end of the tube 88 is adapted to seat against the lower end of a vertical passage 90 centrally formed in the piston 55. The interior of this tube 88 is in communication with the upper surface of the diaphragm 52 by means of a smaller tube 91 and a passage 92 formed through the head 50. A helical compression spring 93 normally biases the cup 86 and hence the upper end of the tube 88 downwardly. The interior of the cylindrical cavity 85 is in communication with the annular space 63 by passages 94 formed in the stem 46. The underside of the cup 86 is vented to atmosphere by a vent 95 formed through the lower portion of the body 40. With this arrangement, the spring 93 will force the cup 86 and hence the upper end of the tube 88 downwardly when the vacuum existing within the stem cavity 40 falls to a predetermined value, i. e. when the engine's throttle is opened from its idling or deceleration position. Atmospheric pressure will then be immediately admitted to the upper surface of the diaphragm 52 and the latter will accordingly tend to snap downwardly to its solid outline position of Figures 2 and 2a.

The air-fuel shut-off member S

As indicated previously, the air-fuel shut-off member S includes a metering pin, generally designated 34. This metering pin 34 is axially slidably disposed within a bore 97 formed in the main body, generally designated 98, of the shut-off member S. The front portion of this body 98 is formed with an externally threaded nipple element 100 which is threadably secured within an internally threaded cavity 102 formed in one side of the carburetor wall 24. The front portion of the bore 97 terminates in a venturi 104, the front end of which constitutes the orifice of the idling well 30. This venturi 104 is adapted to mix both air and fuel before they enter the carburetor throat 32. As shown in Figures 5, 6 and 7, the fuel enters the idling well 30 through a diagonal passageway 106 formed in the carburetor wall 24 and a plurality of radially extending ports 108 having their radially inner ends terminating within the throat of the venturi 104. Conveniently, an adjustment needle 109 may be disposed in the passageway 106 for controlling the flow of fuel into the venturi 104. Air enters the venturi 104 through a horizontal passage 110 formed in the carburetor wall 24, the interior of a retainer element 111 carried by the nipple 90 and a plurality of radially extending ports 112 formed in the latter. These ports 112 are in communication with the bore 97 rearwardly of the venturi 104.

The rear portion of the main body 98 is formed with a cup element 113, the interior of which constitutes a coaxial continuation of the bore 97. The rear of the cup 113 is closed by a closure element 114 that is centrally formed with a threaded bore 115. The latter bore threadably mounts a fitting 116 which is secured to the closure member by a lock nut 117. The fitting 116 is coaxially formed with a passage 118 aligned with the bore 97 of the main body 98. The rear end of this passage 118 is in communication with a smaller counterbore 120. The latter is in turn adapted to be placed in communication with the interior of the limit valve L by means of a conduit 122.

The intermediate portion of the metering pin 34 is formed with a guide collar 124 having its rear end rigidly affixed to the front wall 126 of a metallic bellows 128. The rear end of this metallic bellows 128 is in turn rigidly affixed to the closure element 114. A helical compression spring 130 is interposed between the front wall 126 of the bellows and the front surface of the rear closure element 110. Axial movement of the metering pin 34 to the left or towards an open position is limited by the abutment of a button 132 formed on its rear end and a retainer screw 134 which is carried by the fitting 116. With this arrangement, the front end of the metering pin 34 is normally biased to the left or towards its open position by the compression spring 130. When the interior of the bellows 128 is placed in communication with the intake manifold pressure of the engine, however, in a manner to be set forth hereinafter, the metering pin will be retracted to its closed position of Figures 5 and 7.

It should be particularly noted that the front end of the metering pin 34 is formed with a generally conical plug element 136 which tapers radially outwardly and forwardly away from the front of the idling well 30. With this arrangement, the metering pin will open away from the static pressure of the fuel thereby aiding in the initial resumption of fuel delivery through the venturi 104 into the carburetor throat 32. It will also be apparent that the plug element 136 of the metering pin, as well as the orifice of the idling well 30 upon which it seats is constantly exposed to the slip stream of the air passing through the carburetor throat 32 during engine operation. The slip stream thus serves to keep these elements clean with respect to foreign material carried by the fuel.

It should be likewise noted that in the apparatus of the present invention, the throttle valve 20 when disposed in a closed or idling position is completely seated with respect to the carburetor throat 32. This is not true in the conventional carburetion system wherein the throttle valve is normally left partly open and the air required for idling passes downwardly around the periphery of this throttle valve past the idling well. With the conventional carburetion system, after the engine has been operating for some time, foreign matter will collect on the periphery of the throttle valve so as to shut off a portion of the air passing downwardly into the intake manifold. When this occurs, the air/fuel ratio becomes richer. It will be obvious that this results in a wastage of fuel. With the apparatus of the present invention, such wastage is eliminated inasmuch as the air required for idling by-passes the completely closed throttle valve 20, as shown in Figures 5, 6 and 7. Accordingly, once the proper air/fuel ratio is obtained it need not be changed. An additional advantage of the present system results from the fact that during deceleration, a considerable quantity of fuel will collect behind the plug element 136. Hence, when the metering pin 34 is re-opened, a very rich starting mixture will be provided. In this manner there will be but slight tendency for the engine to run roughly when the throttle is reopened. Furthermore, the light ends of the fuel may reach the intake ports of each combustion chamber at approximately the same time as the air inasmuch as they enter the carburetor throat 32 simultaneously.

The limit valve L

Referring now to Figures 9, 10 and 11, the limit valve L includes a body, generally designated 140, formed at its left end with a cylindrical cavity 142. The front of this cavity 142 is closed by a fitting member 143 having an integral nipple 144 to which is attached one end of a conduit 145. As shown in Figure 1, the opposite end of this conduit 145 is selectively connected to the regulator valve R under the control of the auxiliary limit valve LA in a manner to be described hereinafter. The body 140 is likewise formed with a passage 146 which intersects the rear portion of the cavity 142. A poppet valve element 148 having its stem 150 slidably disposed within a bore 152 formed in the body 140 in alignment with the cavity 142 is adapted to control communication

between the conduit **145** and the passage **146**. A helical compression spring **153** is interposed between the inner end of the cavity **142** and the underside of the head of the poppet valve **148**. The portion of the cavity **142** between the underside of this head and the inner end of the cavity is in communication with the atmosphere by means of a plurality of radially extending ports **156** formed in the body **140**. The radially outer ends of these ports **156** are surrounded by a suitable filter **158**. The free end of the poppet valve's stem **150** is connected to one arm **160** of a generally L-shaped pivot link **162** having its mid-portion pivotally secured to the body **140** by a pin **164**. The opposite arm **166** of the pivot link **162** is affixed to an abutment plate **168** by a bolt **170**. The free end of this abutment plate **168** carries an adjustment bolt **172**. The head of this adjustment bolt **172** is adapted to be engaged by a bumper element **174** which is rigidly affixed to a horizontally extending rod **176** forming a part of the throttle valve actuating linkage means **28**. The bumper **174** and the adjustment bolt **172** are so arranged that the final movement of the throttle valve **20** to its closed or idling position will cause the bumper to engage the head of the adjustment bolt and thereby effect clockwise rotation of the pivot link **162** from its dotted to its solid outline position of Figure 11. When this occurs, the head of the poppet valve **148** will likewise be moved from its dotted to its solid outline position in this figure. Communication may then take place between the conduit **145** and the passage **146**. The latter passage **146** is in communication with the fitting **116** of the air-fuel shut-off member S by a nipple **178** and the conduit **122** secured thereto.

The auxiliary limit valve LA

Referring now to Figures 9 and 11, the auxiliary limit valve LA is shown mounted adjacent the lower left-hand end of the limit valve L. The construction of this auxiliary limit valve LA corresponds to that of the limit valve L and hence a detailed description thereof is not believed necessary. In Figure 11 the visible parts of the auxiliary limit valve LA corresponding to those of the limit valve L are designated by primed reference numerals.

The nipple **144'** of the auxiliary limit valve LA is connected to the conduit **84** leading to the regulator valve R. The nipple **178'** of the auxiliary limit valve LA is connected to the conduit **145**. As in the case of the limit valve L, the poppet valve **148'** is constantly biased to the left relative to Figure 11 so as to cut off communication between the conduits **84** and **145** by the helical compression spring **153'**. The poppet valve **148'** is adapted to be moved to the right so as to permit communication between the conduits **84** and **145** when the head of the adjustment bolt **172'** is engaged by a bumper element **181** secured to a rod **176'** forming a part of the engine clutching linkage of the vehicle wherein the apparatus is installed. This clutching linkage may constitute a part of the manually operated clutch system of a vehicle having a standard transmission, or a part of the drive linkage of an automatic transmission. In either case, the poppet valve **148'** is disposed in its right-hand position relative to Figure 11 so as to permit communication between the conduits **84** and **145** only when the engine E is connected to the wheels of the vehicle wherein the apparatus is installed, as indicated by solid outline in this figure. When the engine E is de-clutched from these wheels, the bumper element **181** will be disengaged from the bolt **172'** and the spring **153'** will snap the poppet valve **148'** to the left so as to cut off communication between conduits **179** and **180**, as shown by its dotted outline in Figure 11.

The float chamber shut-off member F

Referring now to Figures 1 and 8, the float chamber shut-off member F includes a mounting element **181** at its front end which is formed with an externally threaded nipple **182** adapted to screw into a carburetor boss **184** which leads into the float chamber (not shown) of the carburetor C. The float chamber shut-off member F also includes a body member **186** which is formed with an internally threaded socket **188** for receiving the engine's fuel line **190**. The front portion of the body **186** is formed with a coaxial bore **192** which is in alignment with an annular passage **193** formed at the front portion of the socket **188**. A valve member **194** is axially slidably disposed within the bore **192**. This valve member **194** includes a central passageway **196** having an open front end and having a plurality of radially extending ports **198** formed at its rear portion. The rear end of the valve member **194** is conical and is movable towards and away from the passage **193** under the influence of a flexible metallic diaphragm **202**. The central portion of the diaphragm **202** is rigidly secured to the front end of the valve member **194** by a nut **204**. The periphery of the diaphragm **202** is rigidly supported within a generally cylindrical case **206** which is formed between the front portion of the body **186** and the rear portion of the mounting element **180**. A helical compression spring **208** is carried by the front end of the body **184** for constantly biasing the valve member **194** forwardly so as to unseat its conical rear end from the front of the passage **193**. The rear surface of the diaphragm **202** is adapted to be placed in communication with the conduit **122** by means of a fitting **210**, a length of conduit **212** and a Y-shaped connector **214**, as shown in Figure 1. The conduit **122** is connected to the limit valve L.

Operation

In the operation of the aforedescribed preferred form of fuel shut-off apparatus, during engine operating conditions other than deceleration and idling, the throttle valve **20** will be disposed in its open position of Figures 3 and 7. With the throttle valve open, the rectangular opening **72** will be uncovered so as to place the upper surface of the diaphragm **52** of the regulator valve R in communication with atmosphere. Accordingly, the regulator valve's spring **56** will maintain the piston element **55** in its lower dotted outline position of Figure 2. With the piston element **55** so disposed, communication between the two passages **78** and **80** formed in the opposite sides of the regulator valve R will be cut off. When the throttle valve **20** moves to its closed position of Figure 2, however, the upper portion of the rectangular opening **72** will be closed by the edge of the throttle valve. The upper surface of the diaphragm **52** will then be placed in communication with the engine's intake manifold pressure. If it is assumed that the engine is decelerating, the intake manifold pressure will be of a sufficient magnitude that the diaphragm **52** will undergo upward flexure to its solid line position of Figure 2, thus lifting the piston element **55**. The two passages **78** and **80** will then be placed in communication and in this manner the conduit **84** will be connected to the pressure of the intake manifold I.

It should be particularly noted that the use of the aforedescribed regulator valve R permits the air-fuel shut-off member S to be actuated by the full vacuum existing within the intake manifold. This is a decided advantage over the heretofore-proposed devices wherein the motivating force for the fuel shut-off member is dependent upon a differential intake manifold pressure. It will be apparent that positive operation of a fuel shut-off member is difficult to achieve where only a few pounds per square inch pressure is available for operation.

Referring now to Figures 9, 10 and 11, the conduit **84** extending from the regulator valve R is connected to the fitting member **144'** extending from the left side of the auxiliary limit valve LA. Assuming that the engine remains drivingly connected to the wheels during deceleration, the poppet valve **148'** of the auxiliary limit valve LA will be disposed in its right-hand or solid outline

position of Figure 11 and the conduits 84 and 145 will be in communication. Additionally, when the driver's foot is raised from the accelerator pedal so as to close the throttle valve 20, the bumper element 174 on the horizontal rod 176 will engage the adjustment bolt 172 of the limit valve L and, as described hereinabove, will cause the head of the poppet valve 148 to move to the right against the force of the spring 153. Such movement of the poppet valve 148 will place the passage 146 and hence the conduit 122 in communication with the conduit 145. As noted hereinabove, the latter conduit 145 is connected by conduit 84 to the intake manifold I when the throttle valve 20 is closed during deceleration.

Referring now to Figure 5, the opposite end of the conduit 122 is connected to the fitting 116 of the air-fuel shut-off member S. Accordingly, the interior of the bellows 128 will then be placed in communication with the intake manifold pressure. The introduction of intake manifold pressure to the interior of the belows 128 will effect movement of the bellows, and hence the metering pin 34, to the right in Figure 5 so as to cause the latter's plug element 136 to seal off the orifice of the idling well 30. As noted above, such seating of the plug element 136 will cut off the flow of air and fuel into the carburetor throat 32. The plug element 136 will remain seated so long as deceleration of the engine continues and the latter is not de-clutched. When the accelerator pedal is again depressed so as to open the throttle valve 20, atmospheric pressure will again be admitted through the rectangular opening 72 of the regulator valve R. Upon such occurrence both sides of the regulator valve's diaphragm 52 will be exposed to atmospheric pressure, and the spring 56 will urge the piston element 55 downwardly so as to cut off communication between the two passages 78 and 80 and hence between the conduit 84 and the intake manifold I. Referring again to Figures 9, 10 and 11, movement of the accelerator linkage 28 towards an open position will also cause the bumper element 174 on the rod 176 to be moved away from the head of the adjustment bolt 172. The pivot link 162 of the limit valve L will then pivot counter-clockwise to its original position, and communication will be cut off between conduits 84 and 178. Referring now to Figure 5, when the intake manifold pressure is cut off from the interior of the bellows 128 atmospheric pressure will be vented therein from the limit valve L and the compression spring 130 will urge the front wall 126 of the bellows and hence the metering pin 34 to the left. Accordingly, the plug element 136 of the metering pin will be returned to its open position and air and fuel will again be admitted to the carburetor throat 32. If during deceleration the engine E is de-clutched the bumper element 174' will move away from the bolt 172' of the auxiliary limit switch LA so as to permit the spring 153' to move the poppet valve 148' to the left so as to cut off communication between conduits 84 and 145. This causes the plug element 136 of the metering pin 34 to return to its open position independently of the limit valve L. The same result will be obtained in a vehicle having an automatic transmission should the drive selector be moved to "neutral." This arrangement insures that the engine will not stall in the event the driver de-clutches just after the vehicle has decelerated to a stop or near-stop because of a lack of fuel. Instead, the operation of de-clutching will cause an immediate movement of the metering pin 34 to an open position.

Referring now to Figure 8, at the same time that the interior of the conduit 122 is in communication with the intake manifold vacuum, the pressure thereof will be transferred to the rear surface of the float valve shut-off member's diaphragm 202 by means of conduit 212. Accordingly, the valve member 194 thereof, will be urged rearwardly to its solid line position of Figure 8. In this position, the valve member 194 will be seated within the front end of the passage 193 so as to cut off the flow of fuel through the radial ports 198 and hence to the interior of the carburetor float bowl. With this arrangement, there is no danger that fuel may splash out of the carburetor float bowl and into the carburetor throat 32 even though the automotive vehicle should be traversing rough terrain or traveling around a curve as it decelerates. When the intake manifold pressure is no longer in communication with the conduits 122 and 212, the compression spring 208 will again urge the diaphragm 202 and hence the valve member 194 to their dotted line positions of Figure 8. The normal flow of fuel to the carburetor float bowl will then again take place.

Referring again to Figure 1, it should be noted that a dashpot 220 is shown mounted on the left side of the carburetor C. This daspot 220 is so connected to the throttle arm 26 that final movement of the latter towards a closed position when the accelerator pedal is released takes place at a lower rate than prior movement. The utilization of this dashpot 220 with the aforedescribed apparatus has proven to be beneficial in re-establishing normal flow of the fuel through the carburetor throat after a period of deceleration.

It should be particularly observed that the utilization of the limit valve L described hereinabove prevents inadvertent closure of the plug element 136 of the metering pin 34, during open throttle engine operation where the throttle valve 20 is permitted to close slightly from its open position. Under such conditions there would be a momentary increase in the intake manifold pressure. Without the provision of the limit valve if such an increase were of sufficient magnitude, it could effect a closure of the plug element 136. With the use of the limit valve L, however, even though such a surge in the intake manifold pressure raised the piston element 55 of the regulator valve R so as to connect the conduits 84, 145 and 122 with the intake manifold pressure, this pressure would not be transmitted to the air-fuel shut-off member S, inasmuch as the poppet valve 148 of the limit valve L is not unseated except during the final travel of the throttle valve actuating linkage 28 towards a closed position. It should be realized, however, that in certain installations the limit valve L and/or the auxiliary limit valve LA may be eliminated and the conduit 122 connected directly to the fitting 116 of the air-fuel shut-off member S.

Modified form of limit valve of Figure 12

Referring now to Figure 12 there is shown a modified form of limit valve which may be utilized in place of the arrangement shown in Figure 11. This modified form of limit valve is designated LM and it is adapted to be actuated by electrical rather than vacuum means. The modified limit valve LM includes a generally cylindrical body 240 formed at its left end with a cylindrical cavity 244 wherein is disposed a poppet valve 246. The cavity 244 is closed by a fitting member 247 having an integral nipple 248 that may be attached to the aforedescribed conduit 84 leading to the regulator valve R. The poppet valve 246 is constantly biased to the left towards a closed position by helical compression spring 250. The cavity 244 is connected to a passage 252 wherein is disposed a nipple 254. This nipple 254 is adapted to be attached to the aforedescribed conduit 122 leading to the air-fuel shut-off member S. The side of the body 240 remote from the conduit 84 contains an electric solenoid 256. This solenoid 256 is adapted when energized to pull the poppet valve 246 to the right so as to permit communication between the conduits 84 and 122. When the solenoid is de-energized, the spring 250 will return the poppet valve 246 to the left so as to cut off communication between these two conduits. A switch 258 controls the operation of the solenoid 256 in conjunction with an auxiliary switch 260. One side of the windings of the solenoid 256 is connected to one of the terminals 262 of the switch 258 by a lead 263. The other side of these windings is connected to a source of electric cur-

rent by a lead **266**. The second terminal **268** of the switch **258** is connected to one of the terminals **270** of the auxiliary switch **260** by a lead **272**. The other terminal **274** of the auxiliary switch **260** is connected to the source of electric current by a lead **276**. The actuating button **278** of the switch **258** is engaged by the aforedescribed bumper element **174** of the throttle valve actuating linkage means. The actuating button **280** of the auxiliary switch **260** is adapted to be engaged by the aforedescribed button element **181** of the rod **176'** of the engine clutching linkage.

In the operation of this modified form of limit valve LM, when the engine E is connected with the wheels of the vehicle wherein the apparatus is mounted, the bumper element **181** will be engaged with the actuating button **280** whereby the auxiliary switch **260** will be closed. Assuming that the throttle valve **20** is disposed in a closed position, the bumper element **174** of the throttle valve actuating linkage will be engaged with the actuating button **278** of the switch **258** and the latter will be closed. Accordingly, current will be conducted to the windings of the solenoid **256** and the poppet valve **246** will be moved to the right so as to permit communication between conduits **84** and **122**. The interior of the bellows **128** of the air-fuel shut-off members S may then be placed in communication with the intake manifold I. If, however, the engine E is de-clutched the bumper element **181** will be disengaged from the actuating button **280** of the auxiliary switch **260**. Thus, electric current will not be permitted to flow to the switch **258**. Thus, it will be seen that the modified limit valve LM takes the place of both the aforedescribed limit valve L and auxiliary limit valve LA.

It will be apparent that various other modifications and changes may be made with respect to the foregoing description without departing from the spirit of the invention or the scope of the following claims.

I claim:

1. Fuel shut-off apparatus for use with an internal combustion engine having carburetor means, an intake manifold connected with said carburetor means, an idling fuel passage in said carburetor means and a throttle valve in said carburetor means, comprising: a shut-off member for controlling the flow of fluid through said idling fuel passage; an opening formed in said carburetor means, said opening being substantially covered by said throttle valve when the latter is in a closed position and uncovered by said throttle valve when the latter is in an open position; and means operatively interposed between said opening and said shut-off member for effecting operation of the latter responsive to the position of said throttle valve.

2. Fuel shut-off apparatus for use with an internal combustion engine having carburetor means, an intake manifold connected with said carburetor means, an idling fuel passage in said carburetor means and a throttle valve in said carburetor means, comprising: a pressure-responsive shut-off member for controlling the flow of fluid through said idling fuel passage; conduit means for connecting said shut-off member to said intake manifold; an opening formed in said careburetor means, said opening being substantially covered by said throttle valve when the latter is in a closed position and uncovered by said throttle valve when the latter is in an open position; and valve means interposed in said conduit means for controlling communication between said shut-off member and said intake manifold, said valve means being connected with said opening so as to be responsive to the position of said throttle valve relative thereto.

3. Fuel shut-off apparatus for use with an internal combustion engine having carburetor means, an intake manifold connected with said carburetor means, an idling fuel passage in said carburetor means and a throttle valve in said carburetor means, comprising: an opening formed in said carburetor means, said opening being substantially covered by said throttle valve when the latter is in a closed position and uncovered by said throttle valve when the latter is in an open position; a pressure-responsive shut-off member for controlling the flow of fluid through said idling fuel passage; conduit means for connecting said shut-off member to said intake manifold; a regulator valve having a passage forming a portion of said conduit means and a blocking element movable relative to said passages for controlling flow therethrough, and a pressure-responsive wall operatively connected to said blocking means and having one of its sides exposed to a substantially constant fluid pressure; and means for placing the opposite side of said wall in communication with said opening.

4. Fuel shut-off apparatus for use with an internal combustion engine having carburetor means, an intake manifold connected with said carburetor means, an idling fuel passage in said carburetor means and a throttle valve in said carburetor means, comprising: an opening formed in said carburetor means, said opening being substantially covered by said throttle valve when the latter is in a closed position and uncovered by said throttle valve when the latter is in an open position; a pressure-responsive shut-off member for controlling the flow of fluid through said idling fuel passage; conduit means for connecting said shut-off member to said intake manifold; a regulator valve formed with a passage that defines a portion of said conduit means and with a cavity intersecting said passage, said regulator valve having a blocking element slidably disposed in said cavit for controlling flow through said passage, said regulator valve having sensing means responsive to the differential between atmospheric pressure and intake manifold pressure for effecting movement of said blocking element; and means for placing said sensing means in communication with said opening.

5. Fuel shut-off apparatus as set forth in claim 4 where said sensing means includes a flexible diaphragm secured to said blocking element and exposed on one side to atmospheric pressure, and spring means constantly opposing the force exerted by such pressure against said diaphragm.

6. Fuel shut-off apparatus for use with an internal combustion engine having carburetor means, an intake manifold connected with said carburetor means, an idling fuel passage in said carburetor means and a throttle valve in said carburetor means, comprising: an opening formed in said carburetor means, said opening being substantially covered by said throttle valve when the latter is in a closed position and uncovered by said throttle valve when the latter is in an open position; a shut-off member for controlling the flow of fluid through said idling fuel passage, said member including a metering pin movable within said idling fuel passage between an open and a closed position, a pressure-responsive element secured to said pin for actuating same and resilient means constantly biasing said pin toward one of said positions; conduit means for connecting said pressure-responsive element to said intake manifold; and valve means interposed in said conduit means for controlling communication between said pressure-responsive element and said intake manifold, said valve means being connected to said opening so as to be responsive to the position of said throttle valve relative thereto.

7. Fuel shut-off apparatus for use with an internal combustion engine having carburetor means, an intake manifold connected with said carburetor means, an idling fuel passage in said carburetor means and a throttle valve in said carburetor means, comprising: an opening formed in said carburetor means, said opening being substantially covered by said throttle valve when the latter is in a closed position and uncovered by said throttle valve when the latter is in an open position; a shut-off member for controlling the flow of fluid through said idling fuel passage, said member including a metering pin

movable within said idling fuel passage between an open and a closed position, a pressure-responsive element secured to said pin for actuating same and resilient means constantly biasing said pin toward one of said position; conduit means for connecting said pressure-responsive means to said intake manifold; a regulator valve having a passage forming a portion of said conduit means and a blocking element movable relative to said passage for controlling flow therethrough, and a pressure-responsive wall operatively connected to said blocking means and having one of its sides exposed to a substantially constant fluid pressure; and means for placing the opposite side of said wall in communication with said opening.

8. Fuel shut-off apparatus for use with an internal combustion engine having carburetor means, an intake manifold connected with said carburetor means, an idling fuel passage in said carburetor means and a throttle valve in said carburetor means, comprising: a pressure-responsive shut-off member for controlling the flow of fluid through said idling fuel passage; conduit means for connecting said shut-off member to said intake manifold; a regulator valve having a passage forming a portion of said conduit means and a blocking element movable relative to said passage for controlling flow therethrough, and a pressure-responsive wall operatively connected to said blocking means and having one of its sides exposed to a substantially constant fluid pressure; and means for placing the opposite side of said wall in communication with said intake manifold.

9. Fuel shut-off apparatus for use with an internal combustion engine having carburetor means, an intake manifold connected with said carburetor menas, an idling fuel passage in said carburetor means and a throttle valve in said carburetor means, comprising: a pressure-responsive shut-off member for controlling the flow of fluid through said idling fuel passage; conduit means for connecting said shut-off member to said intake manifold; a regulator valve formed with a passage that defines a portion of said conduit means and with a cavity intersecting said passage, said regulator valve having a blocking element slidably disposed in said cavity for controlling flow through said passage, said regulator valve also having sensing means responsive to the differential between atmospheric pressure and intake maifold pressure for effecting movement of said blocking element; and means for placing said sensing means in communication with said intake manifold.

10. Fuel shut-off apparatus as set forth in claim 9 where said sensing means includes a flexible diaphragm connected to said blocking element and exposed on one side to atmospheric pressure, and spring means constantly opposing the force exterted by atmospheric pressure against said diaphragm.

11. Fuel shut-off apparatus for use with an internal combustion engine having carburetor means, an intake manifold connected with said carburetor means, an idling fuel passage in said carburetor means and a throttle valve in said carburetor means, comprising: a shut-off member for controlling the flow of fluid through said idling fuel passage, said member including a metering pin movable within said idling fuel passage between an open and a closed position, a pressure-responsive element secured to said pin for actuating same and resilient means constantly biasing said pin toward one of said positions; conduit means for connecting said pressure-responsive element to said intake manifold; a regulator valve having a passage forming a portion of said conduit and a blocking element movable relative to said passage for controlling flow therethrough, and a pressure-responsive wall operatively connected to said blocking means and having one of its sides exposed to a substantially constant fluid pressure; and means for placing the opposite side of said wall in communication with said intake manifold.

12. Fuel shut-off apparatus for use with an internal combustion engine having carburetor means, an intake

manifold connected with said carburetor means, an idling fuel passage in said carburetor means and a throttle valve in said carburetor means, comprising: a shut-off member for controlling the flow of fluid through said idling fuel passage, said member including a metering pin movable within said idling fuel passage between an open and a closed position, a pressure-responsive element secured to said pin for actuating same and resilient means constantly biasing said pin toward one of said positions; conduit means for connecting said pressure-responsive element to said intake manifold; a regulator valve formed with a passage that defines a portion of said conduit means and with a cavity intersecting said passage, said regulator valve having a blocking element slidably disposed in said cavity for controlling flow through said passage, said regulator valve also having sensing means responsive to the differential between atmospheric pressure and intake manifold pressure for effecting movement of said blocking element; and means for placing said sensing means in communication with said intake manifold.

13. Fuel shut-off apparatus for use with an internal combustion engine having carburetor means including a float chamber, an intake manifold connected with said carburetor means, an idling fuel passage in said carburetor means and a throttle valve in said carburetor means, comprising: a shut-off member for controlling the flow of fluid through said idling fuel passage; a second shut-off member for controlling the flow of fuel into said float chamber; and means for moving said shut-off members into a closed position during deceleration of said engine.

14. Fuel shut-off apparatus for use with an internal combustion engine having carburetor means including a float chamber, an intake manifold connected with said carburetor means, an idling fuel passage in said carburetor means and a throttle valve in said carburetor means, comprising: a shut-off member for controlling the flow of fluid through said idling fuel passage; a second shut-off member for controlling the flow of fuel into said float chamber; an opening formed in said carburetor means, said opening being substantially covered by said throttle valve when the latter is in a closed position and uncovered by said throttle valve when the latter is in an open position; and valve means operatively interposed between said opening and said shut-off members for effecting concurrent operation thereof responsive to the position of said throttle valve.

15. Fuel shut-off apparatus for use with an internal combustion engine having carburetor means including a float chamber, an intake manifold connected with said carburetor means, an idling fuel passage in said carburetor means and a throttle valve in said carburetor means, comprising: a pressure-responsive shut-off member for controlling the flow of fluid through said idling fuel passage; a second pressure-responsive shut-off member for controlling the flow of fuel into said float chamber; an opening formed in said carburetor means, said opening being substantially covered by said throttle valve when the latter is in a closed position and uncovered by said throttle valve when the latter is in an open position; conduit means for connecting said shut-off members to said intake manifold; and valve means connected with said opening and interposed in said conduit means for controlling communication between both of said shut-off members and said intake manifold, said valve means being responsive to the position of said throttle valve relative to said opening.

16. Fuel shut-off apparatus for use with an internal combustion engine having carburetor means including a float chamber, an intake manifold connected with said carburetor means, an idling fuel passage in said carburetor means and a throttle valve in said carburetor means, comprising: a shut-off member for controlling the flow of fluid through said idling fuel passage, said member including a metering pin movable within said idling fuel passage between an open and a closed position, a pres-

sure-responsive element secured to said pin for actuating same and resilient means constantly biasing said pin toward one of said positions; a second shut-off member for controlling the flow of fuel into said float chamber, said second shut-off member including a valve element movable within said member between an opened and a closed position, a pressure-responsive element secured to said valve element for actuating same so as to control flow into said float chamber and resilient means constantly biasing said valve element towards one of said positions; conduit means for connecting both of said shut-off members with the pressure of said intake manifold; and valve means connected with said opening interposed in said conduit means for controlling the flow of fluid therethrough responsive to the position of said throttle valve relative to said opening.

17. Fuel shut-off apparatus for use with an internal combustion engine having carburetor means including a float chamber, an intake manifold connected with said carburetor means, an idling fuel passage in said carburetor means and a throttle valve in said carburetor means, comprising: a pressure-responsive shut-off member for controlling the flow of fluid through said idling fuel passage; a second pressure-responsive shut-off member for controlling the flow of fuel into said float chamber; conduit means for concurrently connecting said shut-off members to said intake manifold; a regulator valve having a passage forming a portion of said conduit means and a blocking element that is movable relative to said passage for controlling flow therethrough, and a pressure-responsive wall operatively connected to said blocking means and having one of its sides exposed to a substantially constant fluid pressure; and means for placing the opposite side of said wall in communication with said intake manifold.

18. Fuel shut-off apparatus for use with an internal combustion engine having carburetor means including a float chamber, an intake manifold connected with said carburetor means, an idling fuel passage in said carburetor means and a throttle valve in said carburetor means, comprising: a pressure-responsive shut-off member for controlling the flow of fluid through said idling fuel passage; a second pressure-responsive shut-off member for controlling the flow of fuel into said float chamber; conduit means for connecting said shut-off members to said intake manifold; a regulator valve formed with a passage that defines a portion of said conduit means and with a cavity intersecting said passage, said regulator valve having a blocking element slidably disposed in said cavity for controlling flow through said passage, said regulator valve also having sensing means responsive to the differential between atmospheric pressure and pressure within said intake manifold for effecting movement of said blocking element; and means for placing said sensing means in communication with said intake manifold.

19. Fuel shut-off apparatus for use with the internal combustion engine of a wheeled vehicle, said engine having carburetor means, an intake manifold connected with said carburetor means, an idling fuel passage in said carburetor means and a throttle valve in said carburetor means, comprising: a pressure-actuated shut-off member for controlling the flow of fluid through said idling fuel passage; means connecting said shut-off member with said intake manifold whereby said shut-off member will be normally urged into a closed position when the intake manifold vacuum exceeds a predetermined value; and limit valve means for moving said shut-off member to an open position regardless of the value of said intake manifold vacuum when said throttle valve is opened beyond its idling position.

20. Fuel shut-off apparatus for use with the internal combustion engine of a wheeled vehicle, said engine having carburetor means, an intake manifold connected with said carburetor means, an idling fuel passage in said carburetor means and a throttle valve in said carburetor means, comprising: a pressure-responsive shut-off member for controlling the flow of fluid through said idling fuel passage; conduit means for connecting a chamber in said shut-off member to said intake manifold whereby said shut-off member will normally be urged into a closed position when the intake manifold vacuum exceeds a predetermined value; and limit valve means for connecting said conduit means to atmosphere and thereby venting said chamber whereby said shut-off member will be moved to an open position regardless of the value of said intake manifold vacuum when said throttle valve is opened beyond its idling position.

21. Fuel shut-off apparatus as set forth in claim 20 where said limit valve means includes a body formed with a chamber defining a portion of said conduit means, said chamber being vented to the atmosphere, a valve element movable within said cavity between an open position wherein said cavity is connected with said intake manifold and a closed position wherein said cavity is connected to atmosphere, resilient means constantly biasing said valve element towards said closed position, and motion transmitting means secured to said valve element for urging it out of said closed position to said open position when said throttle valve is moved towards its idling position, said motion transmitting means being engageable by the actuating linkage of said throttle valve.

References Cited in the file of this patent

UNITED STATES PATENTS

1,650,482	Barden	Nov. 22, 1927
1,886,672	Good	Nov. 8, 1932
1,982,049	Fageol	Nov. 27, 1934
1,990,702	Leibing	Feb. 12, 1935
2,094,555	Von Hilvety	Sept. 28, 1937
2,103,700	Smart	Dec. 28, 1937
2,212,936	Hoof	Aug. 27, 1940
2,353,524	Stone	July 11, 1944
2,362,655	Mallory	Nov. 14, 1944
2,506,511	Mallory	May 2, 1950
2,623,617	Snyder et al.	Dec. 30, 1952