United States Patent [19]

Bravo et al.

[11] **3,809,351**

[45] **May 7, 1974**

[54] **HOLDER**

[76] Inventors: **Ricardo Bravo,** 2920 St. John, Tampa, Fla. 33607; **I. C. Street,** 701 Hill Dr., Zephryhills, Fla. 33599

[22] Filed: **Dec. 26, 1972**

[21] Appl. No.: **318,539**

[52] **U.S. Cl.** **248/210,** 182/129

[51] **Int. Cl.** **E06c 7/14**

[58] **Field of Search** 182/129, 230; 248/211, 248/210

[56] **References Cited**

UNITED STATES PATENTS

3,332,653	7/1967	Hoelzel	248/210
978,550	12/1910	Boyd	248/211
3,104,859	9/1963	Hoelzel	248/210
2,243,799	5/1941	Glosier	248/211

Primary Examiner—Reinaldo P. Machado

Attorney, Agent, or Firm—Stein, Orman & Fisher

[57] **ABSTRACT**

A bracket of the type to be used in combination with a ladder so as to support a paint can or like container thereon so as to be readily excessible to a painter or the like positioned on the ladder. The bracket may be formed from a one piece element and include a container holder portion specifically configured to correspond to the shape of the container being supported. An attaching means is designed to engage a single rung and comprises at least two substantially arcuate shaped fingers arranged in opposed relation to one another and interconnected by an arm at the opposite extremities thereof such that the arm is disposed in an angular or non-parallel relation to the longitudinal axis of the rung. An interconnecting means engages a rail of the ladder and interconnects the attaching means to the holder such that the holder is supported adjacent the exterior surface of the rail at the approximate level of the rung which is engaged by the attaching means.

3 Claims, 6 Drawing Figures

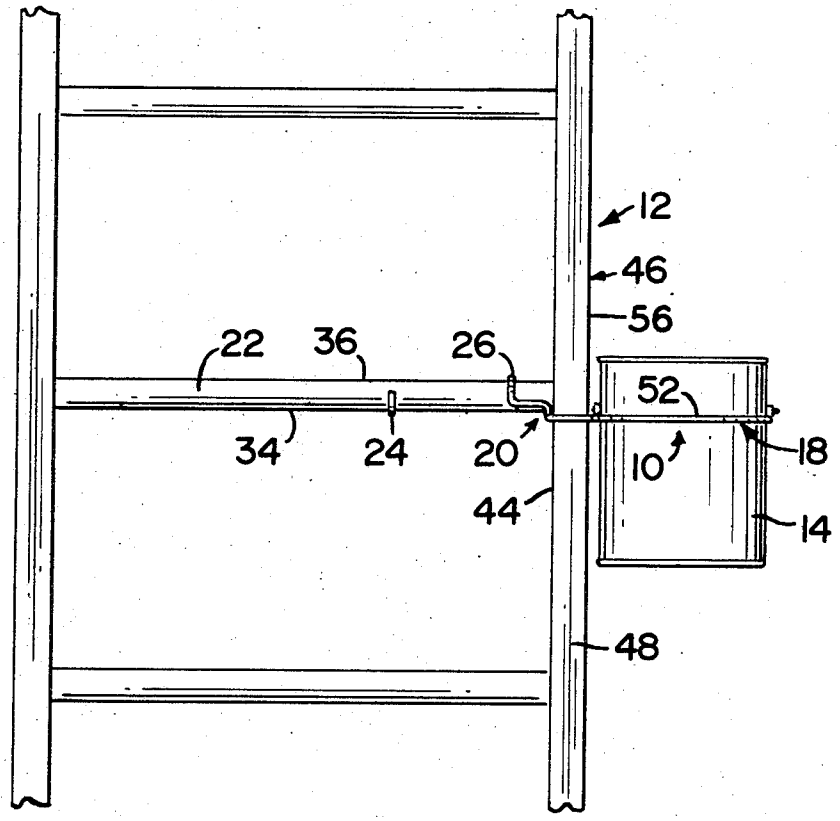

FIG. 1

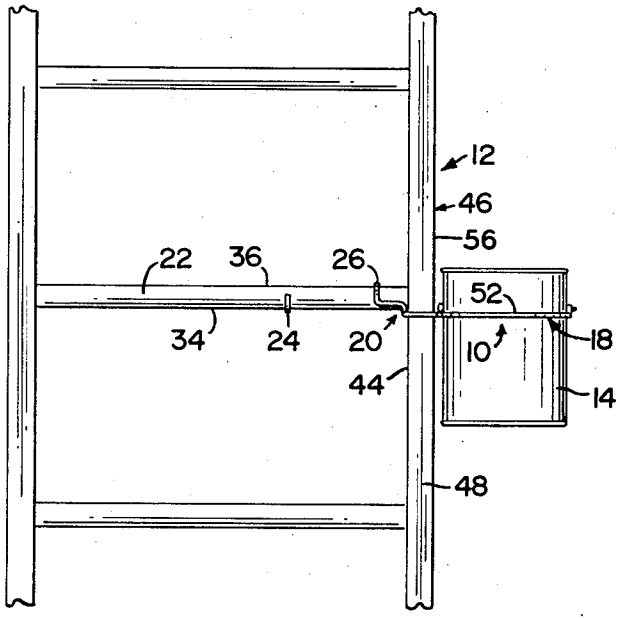

FIG. 5

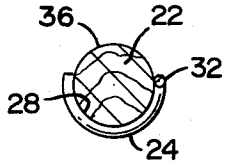

FIG. 6

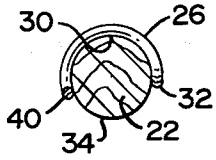

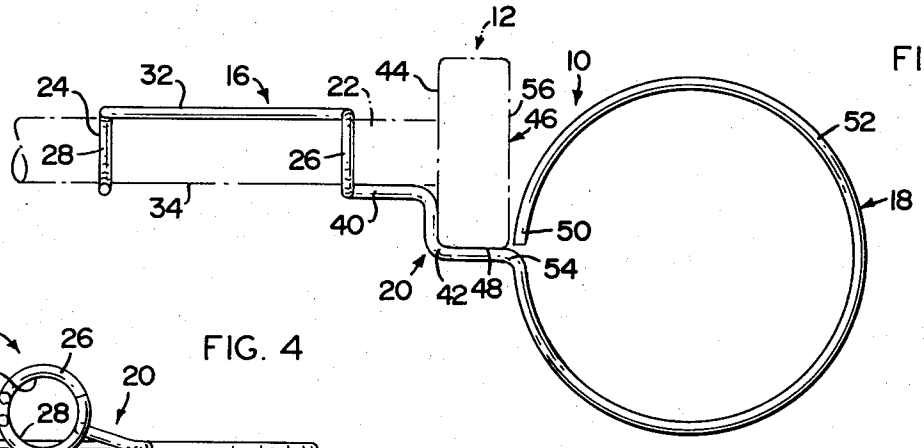

FIG. 2

FIG. 4

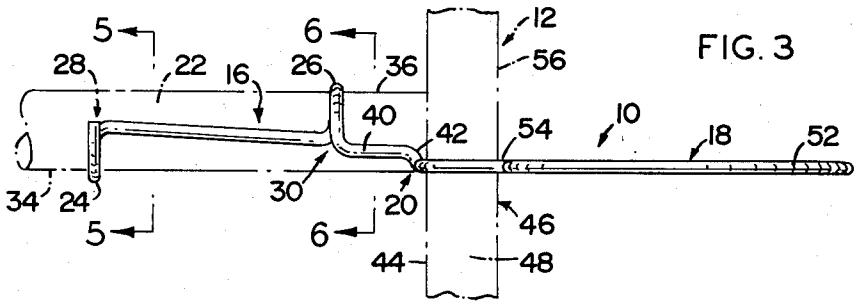

FIG. 3

HOLDER

BACKGROUND OF THE INVENTION

1. Field of the Invention

A one piece container holding bracket designed to be removably attached to a rung of a ladder so as to position a paint can or like container in easy reach of one positioned on the ladder.

2. Description of the Prior Art

For many years it has been well known to use ladders, scaffolds, and like structures in order to paint the outer surfaces of houses and larger buildings. In utilizing a ladder or the like a painter is obviously faced with the problem of locating the paint can or container holding the paint in a position where he can conveniently add paint to his brush when needed. It is obviously desirable that both the painter's hands be free both to secure himself to the ladder and to reach the surface he is painting. It is obviously impractical for the painter to hold the container with one hand, steady himself on the ladder and do an efficient job of painting. The weight of a container full of paint as well as the danger of falling from the ladder make this procedure highly undesirable.

In order to overcome these problems the various ladders have been devised wherein a platform is provided for the specific purpose of providing space on which to position a can of paint or other objects. The conventional step ladder is a well known example of this type of ladder. However, the step ladder with its shelf attached is inefficient in many applications due to its lack of versatility. The shelf or platform on this type of ladder is generally located in a single position and may not be positioned at various heights along the ladder.

In an attempt to overcome this lack of versatility many devices have been developed in the prior art for removably positioning a container at various levels along the length of a ladder. Such devices generally take the form of brackets or the like wherein the bracket itself is removably attached to the rung or other convenient portion of the ladder. The devices of this type are represented in the following U.S. Pats.: Nos. 2,508,258 to Heinrich; 2,912,204 to Raysinger; 3,239,180 to Bachmann and 3,332,653 to Hoelzel.

Devices of the type disclosed in these patents as well as other devices in the prior art, while attempting to overcome problems existing in the paint industry, generally include these advantages which often times makes these prior art structures undesirable. This type of structure often times suffers from being unduly complicated and structurally complex. This of course adds to the initial purchase price of the device and often times effects its operable life. In addition the cost of repair or replacement of these devices also makes them undesirable. The nature of this device in locating a paint container of a desired level along the ladder demand that it be readily removable from a given location and relocated at a different level on the same ladder. This is normally accomplished while the user of the device is positioned on the ladder himself. Prior art structures, again because of their overly complex structure, frequently make removal and attachment of the bracket overly difficult. This results in lost time, danger to the painter attempting to relocate the holding device and general inconvenience.

Accordingly, it can be seen that there is a great need in the paint industry for a holding device or bracket-type structure which can be efficiently and quickly connected and disconnected to a desired point on a ladder and maintain a container or like structure connected to the ladder at a predetermined location.

SUMMARY OF THE INVENTION

This invention relates to a bracket or holding device used to support a paint can or like container on a ladder such that the container is positioned to be readily accessible to one standing on the ladder.

More specifically the bracket comprises an attaching means designed to be removably connected to a single rung of the ladder. A container holder portion is connected in support relation to the attaching means by an interconnecting means integrally connected to both the attaching means and the holder means and arranged therebetween.

The attaching means itself comprises at least a first and second finger member each of which has an arcuate or substantially semi-circular configuration. This particular configuration defines an opened section which facilitates mounting the attaching means onto the rung. The first and second fingers are arranged in spaced relation to one another by virtue of their being connected to opposite extremity of an arm means serving to interconnect the two fingers. The opposite extremities of this arm means are connected to the fingers adjacent the open section of each and are disposed so as to orient the fingers in opposed relation to one another. In addition the position of the arm means relative to the two fingers defines an angular or non-parallel orientation of the arm means relative to the longitudinal axis on which the fingers are mounted. The opposed relation of the fingers and the non-parallel relation of the arm means relative to the rung provides a secure attachment of the bracket to the ladder which prevents it inadvertent removal and spilling of the contents within the supported container. On the other hand the bracket can be readily removed by merely tilting the bracket against the weight of the container and pivoting it outward away from the axis of the rung.

The holder portion of the bracket comprises a substantial circular configuration which defines an open loop. This open loop allows the dimension of the holder portion to be adjusted or varied to a certain extent thereby compensating for various sizes of containers.

As stated above the interconnecting means is integrally attached to both the attaching means and the holder portion and itself includes one leg extending from the extremity of one arcuate finger toward the inside surface of a rail of the ladder. The remainding portion of the interconnecting means is shaped into a substantially L-shaped leg so as to at least partially surround one corner of the rail and extend over the front surface or edge thereof. By virtue of this configuration and its position relative to the attaching means the holder is positioned on the exterior of the ladder immediately adjacent the exterior surface of the rail which is engaged by the interconnecting means.

In operation the user of the bracket merely attaches it to any given rung on the ladder so as to position a container supported by a bracket in a readily excessible position relative to one positioned on the ladder. Connecting of the bracket to the ladder occurs by positioning the outermost finger in partial surrounding position

relative to the lowermost surface of a given rung. The arm means connecting the two fingers is thereby positioned on the back surface of the rung and accordingly the inner most finger partially surrounds the uppermost surface of the rung. The interconnecting means is thereby positioned adjacent to the front surface of the rung and over the inside and front surface of the rail. Proper positioning of the finger relative to the rung on which the bracket is mounted is easily accomplished by a simple pivotal motion of the attaching means relative to the rung. Removal of the bracket is accomplished by a similar but opposite movement.

This invention accordingly comprises the features of construction, combination of elements and arrangement of parts which will be exemplified in the construction hereinafter set forth and the scope of the invention will be indicated in the claims.

BRIEF DESCRIPTION OF THE DRAWINGS

For a fuller understanding of the nature and objects of the invention, reference should be had to the following detailed description taken in connection with the accompanying drawing in which:

FIG. 1 is a front plan view of the bracket of the present invention used in combination with a ladder and supporting a container or the like thereon.

FIG. 2 discloses a top plan view of the bracket and its application to the ladder which is indicated in dotted lines.

FIG. 3 is a side view of FIG. 2.

FIG. 4 is an end view of the bracket shown in FIG. 3.

FIG. 5 is a sectional view taken along lines 5—5 of FIG. 3.

FIG. 6 is a sectional view taken along lines 6—6 of FIG. 3.

Similar reference characters refer to similar parts throughout the several views of the drawings.

DETAILED DESCRIPTION

As shown in FIGS. 1 and 2 this invention relates to a bracket or holding device generally indicated as 10 designed to be used in combination with a ladder 12 to support a paint can or like container 14 thereon in ready access to one positioned on the ladder 12. More particularly, as clearly shown in FIG. 2, the bracket comprises an attachment means generally indicated as 16 and a holder portion 18 interconnected to the attachment means 16 by an interconnecting means 20 which serves to maintain the holder 18 and container 14, mounted therein in predetermined relation to a rung 22.

The attachment means itself comprises a plurality of arcuate or semi-circular shaped fingers which includes at least a first finger 24 and a second finger 26. As shown the configuration and dimensions of these figures are such as to at least partially surround the rung 22 to which they are attached. This semi-circular configuration of each finger defines an opened section generally indicated as 28 and 30 respectively. The attachment means further comprises an arm 32 arranged in interconnected relation between fingers 24 and 26 and thereby disposing them in a spaced apart relation to one another. The opposite extremities of arm 32 is integrally connected to the fingers 24 and 26 immediately adjacent the opened sections 28 and 30 respectively. In addition, it is important to note that the arm 32 is oriented in a non-parallel or angular relation relative to the longitudinal axis of rung 22 or any rung on which the bracket may be mounted. This orientation of arm 32 is due to the fact that the dimensions of the fingers 24 and 26 are such as to at least partially surround more than half of the peripheral surface of the rung. This angular orientation of arm 32 also prohibits the inadvertent removal of the bracket from the rung on which it is mounted. This is further aided by the fact that fingers 24 and 26 are oppositely disposed relative to one another such that the first finger 24 surrounds the lower surface area generally indicated as 34 while the second rung engaging member 26 partially surrounds the upper surface of rung 22. The terms "upper" and "lower" with reference to the surfaces of rung 22 is to be interpreted in light of the position of the ladder as shown in broken lines in FIG. 3. It is obvious that the ladder may be oriented in various positions whereby "upper" and "lower" may be essentially different surface areas than shown in FIG. 3. FIGS. 5 and 6 are directed to cross sectional views showing the relative orientation between arm 32 and first rung engaging element 24 and interconnecting means 20 and the second rung engaging member 26 respectively.

As shown in FIG. 2 and 3, the interconnecting means comprises a first leg 40 dimensioned and configured to extend along rung 22 from one extremity where it connects to the second rung engaging member 26 to its opposite extremity where it integrally connects with an essentially L-shaped leg portion 42 which also comprises part of the interconnecting means. The leg portion 42 is configured to specifically abut against the inner surface 44 of rail 46 and against the leading edge or surface 48 of rail 46. In this manner the L-shaped leg partially surrounds rail 46 and adds to the support of the bracket in addition to the attachment means 16. It should be noted that both the leg portions 40 and 42 may have varying dimensions so as to adapt to the various sized ladders. It is clear that the dimensions of these portions can be altered so as to be mountable on ladders having various sized rails and rungs.

The holder portion 18 of the bracket is formed from a one piece element into a substantially open loop, circular configuration. The extremity 50 of the loop 52 is arranged in spaced apart relation from the extremity 54 of leg portion 42 of the interconnecting means. This allows the size of the loop 52 to be varied slightly in order to adapt to containers 14 of various sizes and configurations. Based on its relative position to the interconnecting means 20 and attachment means 16, the holder portion 18 is located immediately adjacent to the outer surface 56 of rail 46 adjacent to the rung 22 on which the attachment means 16 is mounted. In this position the container and its contents are readily accessible to a painter or the like positioned on the ladder.

It will thus be seen that the objects made apparent from the preceding description, are efficiently attained and since certain changes may be made in the above article without departing from the scope of the invention, it is intended that all matter contained in the above description or shown in the accompanying drawings shall be interpreted as illustrative and not in a limiting sense.

It is also to be understood that the following claims are intended to cover all of the generic and specific features of the invention herein described, and all state-

ments of the scope of the invention, which as a matter of language, might be said to fall therebetween.

Now that the invention has been described,

What is claimed is:

1. A container support bracket used in combination with a ladder, said bracket comprising: a holder portion formed into a substantially open loop, circular configuration; attaching means engaging at least one rung of the ladder so as to secure said bracket thereto, said attaching means comprising a plurality of rung engaging members arranged in spaced apart relation to one another and oppositely disposed so as to engage substantially opposed surface portions of the rung; and interconnecting means configured to at least partially engage a rail of said ladder and arranged in interconnecting relation between said attaching means and said holder so as to maintain said holder portion in supported relation adjacent to the portion of the rail engaged by said interconnecting means, said attaching means further comprising arm means interconnecting at least two of said rung engaging members, said rung engaging members comprising at least a first and second finger, each of said first and second fingers having a substantially semi-circular configuration defining an open section in each of said fingers, each of said first and second fingers integrally connected to opposite extremities of said arm means, and disposed in opposed spaced apart relation to one another, said arm means connected contiguous to said open section of each of said first and second fingers and oriented relative thereto so as to be angularly inclined relative to the longitudinal axis of the rung on which said first and second fingers are mounted.

2. A container support bracket as in claim 1 wherein said interconnecting means comprises a first leg dimensioned and configured to extend from said attaching means along the rung on which said bracket is mounted, and a second, substantially L-shaped leg integrally connected to said first leg, said L-shaped leg being dimensioned and configured to abut the rail engaged thereby and connected to said holder portion so as to maintain it in supported relation adjacent to the portion of the rail engaged by said L-shaped leg.

3. A container support bracket as in claim 2 wherein the dimension of said interconnecting, means defines the distance between said attachment means and said holder portion and is determined by the relative dimensions of the rail of said ladder.

* * * * *