July 16, 1940. J. W. FOSTER 2,207,999

PRINTER'S BLANKET

Filed Dec. 18, 1937

Fig. 1.

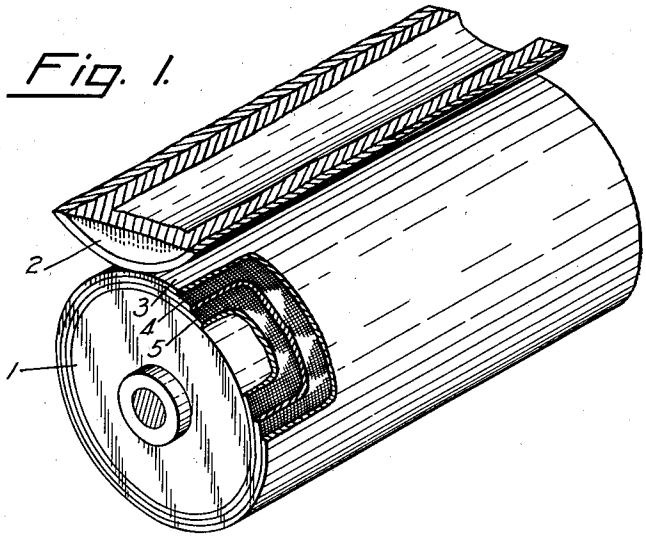

Fig. 2.

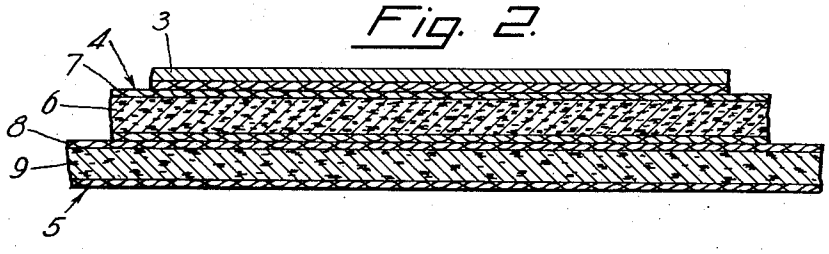

Fig. 3.

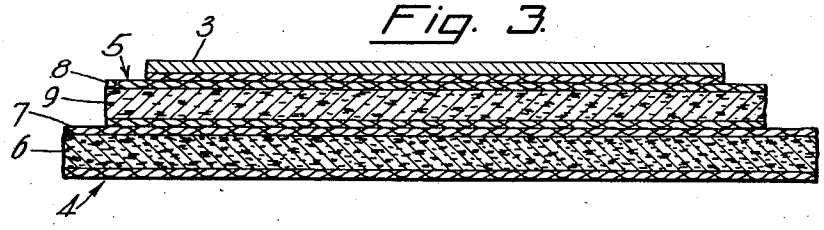

INVENTOR
John W. Foster
By [signature]
ATTORNEY

Patented July 16, 1940

2,207,999

UNITED STATES PATENT OFFICE

2,207,999

PRINTER'S BLANKET

John W. Foster, Ridgewood, N. J., assignor to Tingue Brown & Co., a corporation of New York

Application December 18, 1937, Serial No. 180,583

5 Claims. (Cl. 154—54.5)

My invention relates to printer's blankets.

For many years, it has been the accepted practice, when using a pair of separate blankets, transposable one over the other, as a packing on the impression cylinder of a printing press, to make these blankets identical. In some instances, following the teachings of the Ellis Patent No. 1,855,798, each blanket has been made of wool or felt and provided with a suitable smooth, flexible coating or face layer, such, for example, as nitro-cellulose or the like, adapted to form the impression surface when at the top. In other instances, following the teachings of the Willson Patent No. 1,545,626, each blanket has been made of comminuted cork carried on a fabric base and provided with an opposite, or upper, face adapted for imprinting directly thereon as described in that patent, these blankets being used with a separate top drawsheet overlying the upper blanket and usually having on a fabric base, a coating or face layer similar to the Ellis face layer mentioned and forming the impression surface. In still other instances, such a drawsheet, or a rubber or felt coated blanket, or a paper tympan, has been used as a top member, with a pair of transposable cork blankets underneath, these blankets each also having opposite fabric faces, one of muslin or plain weave, and the other of a twill weave or a drill. However, in all cases, each of the two blankets when used in combination has been identical, not only as to structure, materials, and external faces of each blanket, but also as to gauge and resiliency, it being believed that this identity constituted a necessary factor in the effective use of such transposable blankets.

My invention has among its objects to provide an improved combination of such transposable blankets whereby I am able to obtain improved results. A further object of my invention is to provide such an improved combination of transposable blankets of markedly different resiliency and such as to enable markedly different results to be obtained when the blankets are in their different transposed positions. A still further object of my invention is to provide such an improved combination of blankets wherein, irrespective of which blanket is on top, one of the same, by reason of its markedly greater resiliency, is enabled to function in an improved manner to prevent breaking down of the structure of the blankets and ruin of the latter by permanent impairment of gauge due to great pressure should the paper web break. A still further object of my invention is to provide such an improved combination of blankets wherein, while continuing to provide the above new safety factor, the blankets may be disposed at will in such manner as to be adapted to use effectively with stereotype plates in widely different condition, my improved blankets of widely different resiliency being transposable at will in such manner as to adapt the same for use under substantially all plate conditions, i. e. whether the stereotype plates are uniform or irregular. Still another object of my invention is to provide such an improved combination of blankets wherein, while obtaining the above advantages, it is also made possible to take increased advantage of the favorable characteristics of cork as regards its oil proof character and rapid return to its natural state after compression, while eliminating all need for different surfaces or special face layers or other coatings of nitro-cellulose or the like on the blankets, and while also enabling the use of identical and rugged fabric sheets enclosing the cork and forming effective wear resisting opposite faces of each blanket. These and other objects of my improved construction will, however, hereinafter more fully appear.

In the accompanying drawing, I have shown for purposes of illustration two embodiments which my invention may assume in practice.

In this drawing—

Figure 1 is a perspective view of an impression cylinder equipped with one form of my improvement; the drawsheet and blankets thereon, as well as the printing cylinder, being broken away to facilitate illustration;

Fig. 2 is a flat sectional view of the superimposed blankets and drawsheet in the same arrangement thereof shown in Figure 1, and

Fig. 3 is a view similar to Figure 2, but showing a modified arrangement.

Referring first to the construction shown in Figures 1 and 2, it will be noted that I have there illustrated an impression cylinder 1 cooperating with a plate carrying cylinder 2, the impression cylinder having thereon my improved combination of drawsheet 3 and underlying superimposed blankets 4 and 5; these blankets 4 and 5 being of an improved construction and cooperating with the cylinders 1 and 2 in an improved manner as hereinafter described.

Referring more particularly to Figure 2, it will be observed that the top blanket 4 is provided with a cork filler 6 comprising particles of ground cork treated with oxidized linseed oil and united by a suitable cement, all in the well-known manner, this blanket herein also having, on opposite

faces thereof, identical sheets of suitable fabric 7 such as woven cotton. This blanket 4, the function of which is to give clean, sharp printing, is relatively hard and firm as compared with blanket 5; the degree of hardness being determined by the amount of heat or baking to which the blanket 4 is subjected in manufacture, and also by the fineness to which the particles of cork therein are ground, as well as by the type of oxidized linseed oil or cement used. The blanket 5, on the contrary, while similar in appearance to the blanket 4, is markedly different in construction and effect. This blanket, while also using identical fabric 8, similar to or the same as the fabric 7, on its opposite faces, and also being provided with a cork filler 9, has markedly different characteristics from the blanket 4. More particularly, the cork filler 9, while of generally similar construction to the filler 6 of the blanket 4, is so constructed as to be markedly more resilient than the filler 6; this variation, for example, being obtained by suitable variation in the fineness of the particles of the cork and the amount of heat applied during baking, as well as by differences in the type of oxidized linseed oil used and in the cement used. For example, assuming both blankets to be of .063 gauge, the blanket 4 preferably has a yield of .015 when tested with a yieldometer, while the blanket 5 has a yield of .022, while with both blankets of a .083 gauge, the blanket 4 has a yield of .019 and the blanket 5 a yield of .028.

In practice, the blankets 4 and 5 are also preferably of different gauge. For example, where a hard packing is desirable, and a total packing of .146, a blanket 4 having a gauge of .083 is used with a blanket 5 having a gauge of .063. On the other hand, where the plate condition is poor and a soft striking surface is desired, a blanket 4 having a gauge of .063 is used in combination with a blanket 5 having a gauge of .083. Thus it will be evident that in addition to the difference in resiliency resulting from the different construction of the blankets 4 and 5, a further difference in resiliency is obtained by using blankets of different gauge. Also, it will be evident that the relative hardness desired may be further varied by varying the gauge, while still maintaining the desired difference in resiliency of the blankets and preferably continuing to use blankets of different gauge, as by, where less hard packing is required, increasing the thickness of the blanket 5 and reducing the thickness of the blanket 4, or where a harder packing is required, decreasing the thickness of the blanket 5 and increasing the thickness of the blanket 4.

With the blankets arranged as shown in Figure 2, i. e. with the hard and firm blanket 4 beneath the drawsheet 3 and on top of the markedly more resilient blanket 5 of lesser gauge, it will be evident that clean, sharp printing will be obtained as a result of the use of this combination. During printing, the more resilient blanket 5 will also obviously function effectively with the more hard and firm upper blanket 4, in such manner as properly to support the latter and enable it to perform its desired function. Further, due to the increased resiliency of the blanket 5, it will be evident that this blanket will act to provide a safety factor whenever the paper web breaks. More particularly, this blanket 5, due to its markedly greater resiliency, will yield or compress in thickness without impairment of gauge, as the paper is wrapped around the cylinder under great pressure, in such manner as to form a cushion which takes up this abnormal pressure, thereby preserving the gauge of both blankets and preventing the breaking down of the structure of the blankets, i. e. to a point where they will not return resiliently to their former gauge, which would otherwise result.

In Figure 3, I have shown a modified arrangement wherein the blankets 4 and 5 shown in Figure 2 are transposed; the more resilient blanket 5 of lesser gauge now being on the top, i. e. above the blanket 4 and directly beneath the drawsheet 3. In this arrangement, obviously, the blanket 5, due to its increased resiliency, will accept the maximum of impression and return rapidly to normal gauge, while the relatively hard and firm blanket 4, underlying blanket 5 and acting as the base or bottom of the assembly, will yield very little, while giving the necessary hardness for good printing. It will also be evident that with the blanket 5 in this position, the same will continue to function as above described as a safety blanket should a web break.

As a result of my improved construction, it is possible not only to produce clean, sharp printing when the blanket 4 is on top, as in the combination of Figure 2, which is used where uniform stereotype plates are available, but also to make it possible to use the combination of Figure 3 when irregular stereotype plates are in use, the blanket 5 of markedly greater resiliency then being on top in such manner as to accept the maximum of impression and return rapidly to normal gauge. These are features of marked importance as, while many newspapers are equipped with modern stereotype molds adapted to produce perfect plates, many others throughout the country are not so equipped, and it is accordingly necessary for the blankets to be adapted to function under widely different conditions. Moreover, it will be noted that, as a result of my improved structure, improved results are obtained under either condition, the combination of Figure 2, for example, being especially effective in bringing out half-tone work and finer type, while the combination of Figure 3 very materially improves the printing obtainable under uneven plate conditions. Further, whatever the arrangement, the more resilient blanket 5 cooperates with the blanket 4 in the event of web breakage, to take up the resultant unusual strain and pressure and thereby prevent the ruining of the blankets by the permanent impairment of gauge which would otherwise result.

Thus, with my improved combination, it is made possible to pack presses satisfactorily under substantially all mechanical conditions of the press and, while markedly improving the printing obtainable, under all conditions producing a more safe and lasting construction in the event of web breakage, than heretofore possible. Attention is also directed to the fact that with this construction, it is immaterial, due to the provision of identical fabric surfaces, which surface of either the top or bottom blanket, is uppermost. It will also be evident that, due to the use of such identic opposite fabric faces, the cork fillers of the blankets are adequately protected in such manner as to give long service at minimum cost, while still possessing the well-known characteristics of cork as regards being oil proof and returning rapidly to gauge. Obviously, any desired type of impression sheet may also be used with my improved combination. These and oth-

er advantages of my improved construction will, however, be clearly apparent to those skilled in the art.

While I have herein specifically described two relations in which my invention may be used in practice, it will be understood that these arrangements are shown for purposes of illustration and that the illustrative constructions of the individual blankets may be modified and embodied in other forms without departing from the spirit of the invention or the scope of the appended claims.

What I claim as new and desire to secure by Letters Patent is:

1. A pair of printer's blankets including, in combination, a plurality of separate and directly engaging transposable blankets, each having a cork filler and fabric top and bottom faces thereon, one of said blankets being relatively hard and firm and the other of greater resiliency.

2. A pair of printer's blankets including, in combination, a plurality of separate and directly engaging transposable blankets, each having a cork filler and fabric top and bottom faces thereon, each blanket having a cork filler of different resiliency, and said blankets having like fabric faces on the opposite faces of one blanket, and like fabric faces on the opposite faces of the other blanket.

3. A packing for the impression cylinder of a printing press including, in combination, a plurality of separate transposable blankets of different gauge, each having a cork filler and fabric top and bottom faces thereon, each blanket having a cork filler of different resiliency and top and bottom fabric faces, a fabric face on one blanket non-adhesively engaging a fabric face on another, and an impression sheet non-adhesively engaging the other fabric face of one of said blankets.

4. A pair of printer's blankets including, in combination, a plurality of separate transposable blankets, each having a cork filler and fabric top and bottom faces thereon, said blankets being of different resiliency and separated by directly engaging fabric faces and the blanket of lesser resiliency being relatively hard and firm and disposed over the other.

5. A pair of printer's blankets including, in combination, a plurality of separate transposable blankets, each having a cork filler and fabric top and bottom faces thereon, said blankets being of different resiliency and separated by directly engaging fabric faces and the blanket of greater resiliency being disposed over the other.

JOHN W. FOSTER.