(No Model.)

L. H. BOWMAN.

SASH HOLDER.

No. 599,161. Patented Feb. 15, 1898.

Fig. 2.

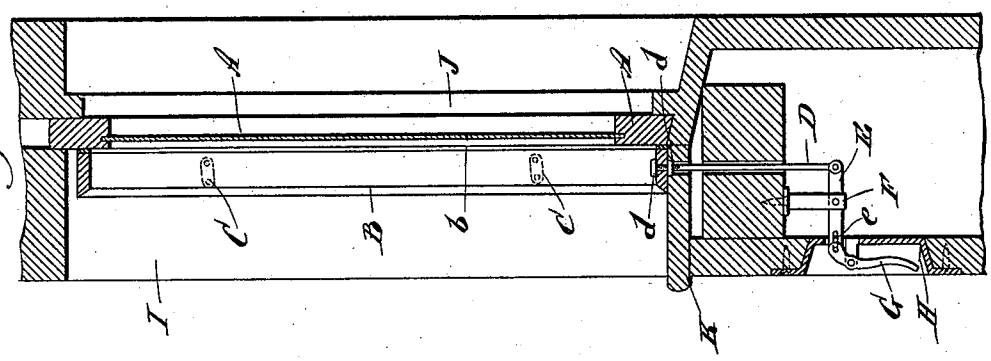

Fig. 1.

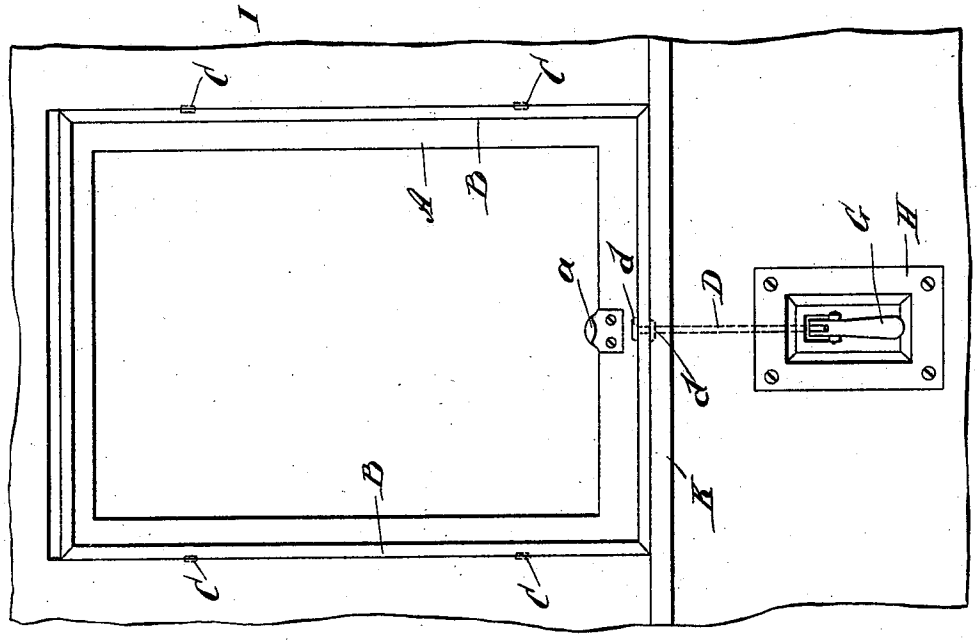

Fig. 3.

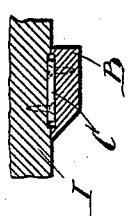

WITNESSES:

Edward Thorpe.

Henry L. Reynolds.

INVENTOR

L. H. Bowman.

BY Munn & Co

ATTORNEYS.

THE NORRIS PETERS CO., PHOTO-LITHO., WASHINGTON, D. C.

UNITED STATES PATENT OFFICE.

LEWIS H. BOWMAN, OF WALLA WALLA, WASHINGTON, ASSIGNOR OF ONE-FOURTH TO RICHARD McGAHEY, OF SAME PLACE.

SASH-HOLDER.

SPECIFICATION forming part of Letters Patent No. 599,161, dated February 15, 1898.

Application filed May 19, 1897. Serial No. 637,205. (No model.)

To all whom it may concern:

Be it known that I, LEWIS H. BOWMAN, of Walla Walla, in the county of Walla Walla and State of Washington, have invented a new and Improved Sash-Holder, of which the following is a full, clear, and exact description.

My invention relates to an improvement in sash-holders, having for its object to hold the window at any elevation desired and also to hold the same in such manner as to prevent rattling, and when closed to prevent the ingress of air or dust. It may also be used as a lock to prevent raising of the window from the outside.

Reference is to be had to the accompanying drawings, forming a part of this specification, in which similar characters of reference indicate corresponding parts in all the figures.

Figure 1 is a front elevation of a window having my device applied thereto. Fig. 2 is a cross-sectional elevation of the same; and Fig. 3 is a detail section through one side of the clamping-frame, showing the link by which it is hinged to the window-casing.

The device is applicable to window-sashes in cars, houses, boats, or wherever windows are used, but is more particularly designed for use in connection with cars.

The window-sash A is not changed in any respect from the sashes in ordinary use, and said sash may be arranged so as to slide either vertically or horizontally, the sash illustrated in the drawings being one which slides vertically. The sash A lies in the usual groove provided therefor and has the backing-strip J upon the outside of the sash. The strip which is usually placed upon the inside of the sash may, if desired, be omitted. This, however, is immaterial, as the device may be used with or without the inner guide-strips.

Within the opening in the casing I, occupied by the window, is placed a frame B, consisting of four bars joined at their ends and fitting closely within the casing, except that the upper cross-bar of the frame is below the upper edge of the opening, thus permitting the frame to be slightly raised. The frame is attached to the sides of the casing by links C, pivoted at one end to the frame B and at the other end to the window-casing. The end of the link next to the window-sash is pivoted to the frame B, and the end farthest from the sash is pivoted to the window-casing.

The edge of the frame B next to the window-sash is preferably provided with a strip *b* of soft yielding material—such as rubber, felt, leather, or similar material. If the frame B be raised, it will be swung away from the window-sash. When the pivot-points of the links C are properly placed, the frame B, when it is swung down, will firmly hold the window-sash against the outer guide-strips J. This will prevent any possible jarring or rattling of the window-sash and if the frame B is held down with sufficient force will lock the window so that it cannot be raised.

To the lower end of the frame B is connected a rod D by means of lock-nuts *d* upon its upper end, one of these nuts being placed above and the other below the lower horizontal bar of the frame B, and by means of these nuts the length of the rod may be adjusted. The lower end of the rod D is pivoted to a lever E, which latter is pivoted upon a bracket F or any other suitable support. The other end of the lever E is provided with a longitudinal slot *e*, which receives a pin in one end of a lever G, pivoted upon a plate H, sunk into the wall of the car just below the window and so that its surface is flush with said wall. When the lower end of the lever G is drawn up, the link or rod D is raised, carrying with it the frame B. This swings the frame upon the links C, so as to free the window A. The sash A may then be raised to any point desired. No special lifting device need be employed for the window-sash, as it will not bind within its groove, and the usual friction between the sash and the window-casing does not occur. An ordinary lifting device *a* is shown in Fig. 1 as applied to the sash A.

When the window-sash has been raised to the desired point, the lever G is forced downward and into the hollow of the plate H. This draws the frame down and forces it firmly against the window-sash, holding it in whatever position it is left. The weight of the window-sash, acting upon the frame B, tends to lock the sash the tighter, and there cannot

be any rattling of the window when so held. The rubber or similar yielding surface *b* upon the edge of the frame B binds firmly against the window and prevents its slipping and also forms a tight joint, preventing the entrance of air or dust.

It is evident that the bars which clamp the window in place need not be formed in the shape of a rectangle, as shown, although this construction is preferred. The use of the side bars only would answer most purposes. The complete frame, as illustrated and described, is, however, preferred.

The device herein described and shown would also answer to hold the window in place, even without the operating-levers and connecting-link, as the weight of the window-sash and of the frame would act upon the frame in such a way as to tightly bind the sash in place.

Having thus fully described my invention, I claim as new and desire to secure by Letters Patent—

A sash-holding device, comprising a frame fitting within the window-casing against the face of the sash and forming an inner stop therefor, links pivoted to the frame and casing by which the frame may be swung upward and away from the sash, a link connected to the end of the frame, a lever connected to said link whereby the frame may be swung up and down and having its opposite end slotted, and a pivoted cam-lever recessed below the surface of the wall for operating the same having a pin fastened through the slot in the other lever, substantially as described.

LEWIS H. BOWMAN.

Witnesses:
S. E. KING,
REINHOLD HARRAS.