April 8, 1941. F. BRILLAS 2,237,472

PAPER FOLDING MACHINE

Filed Oct. 5, 1939

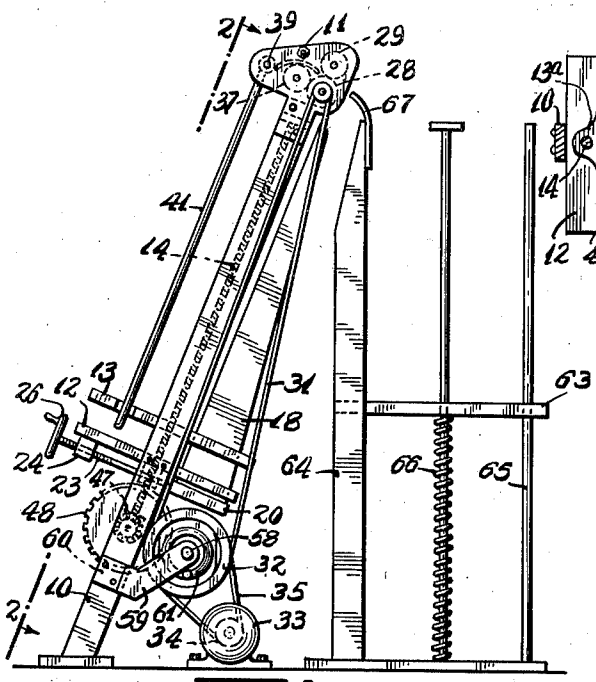

Fig. 1.

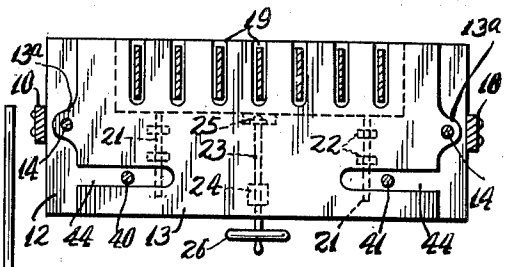

Fig. 3.

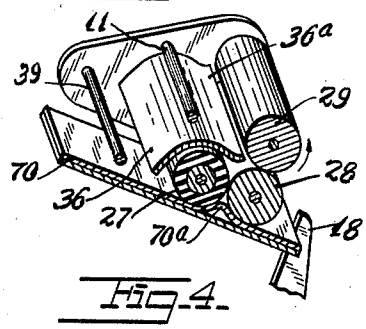

Fig. 4.

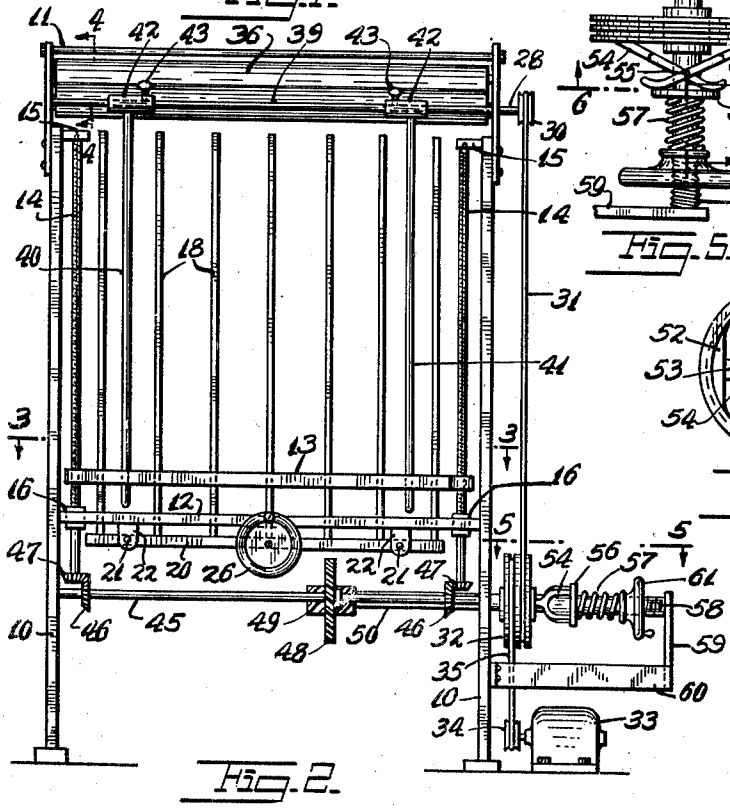

Fig. 2.

Fig. 5.

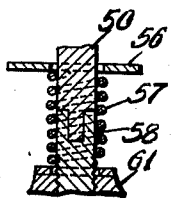

Fig. 7.

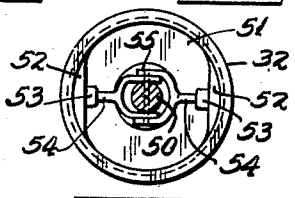

Fig. 6.

INVENTOR
Fredrick Brillas
BY Zoltan A. Blaschke
ATTORNEY

Patented Apr. 8, 1941 2,237,472

UNITED STATES PATENT OFFICE

2,237,472

PAPER FOLDING MACHINE

Fredrick Brillas, New York, N. Y.

Application October 5, 1939, Serial No. 298,022

7 Claims. (Cl. 270—68)

This invention relates to new and useful improvements in a paper folding machine.

The invention has for an object the construction of a paper folding machine which is characterized by a rubber roller and a cooperative steel roller contacting therewith and associated with mechanism for forcing paper against these rollers in a manner so that the rubber roller picks up the paper and moves same between itself and the cooperative steel roller for producing the fold. In place of the rubber roller other rollers having a good friction surface may be used. Similarly, the steel roller may be replaced with other metallic rollers or rollers having smooth surfaces.

Still further the invention contemplates a novel arrangement for supporting the paper in various relative positions to said rollers and moving the paper resiliently against these rollers.

Another object resides in the provision of a novel means for guiding the folded paper to a stacking platform.

For further comprehension of the invention, and of the objects and advantages thereof, reference will be had to the following description and accompanying drawing, and to the appended claims in which the various novel features of the invention are more particularly set forth.

In the accompanying drawing forming a material part of this disclosure:

Fig. 1 is a side elevational view of a paper folding machine constructed according to this invention.

Fig. 2 is a front elevational view of Fig. 1.

Fig. 3 is a horizontal sectional view taken on the line 3—3 of Fig. 2.

Fig. 4 is a fragmentary enlarged sectional view taken on the line 4—4 of Fig. 2.

Fig. 5 is a fragmentary elevational view looking in the direction of the line 5—5 of Fig. 2.

Fig. 6 is a vertical sectional view taken on the line 6—6 of Fig. 5.

Fig. 7 is a fragmentary sectional view taken on the line 7—7 of Fig. 5.

The paper folding machine, according to this invention, includes a frame having a pair of spaced side walls 10 held in fixed positions by several transversely extending members. At the top there is a rod 11 connecting the side walls 10. Intermediate of the height of the frame there is a stationary platform 12 for assisting in fixedly connecting these parts.

A rearwardly inclined platform 13 is vertically movably mounted on the frame. This is accomplished by supporting the platform 13 on a pair of screws 14 rotatively supported at their top ends upon lugs 15 mounted on the side walls 10. Near their bottom ends the screws 14 pass through thrust bearings 16 which are mounted on the stationary platform 12. The platform is formed with side projecting lugs 13a. It is through these lugs that the screws 14 engage. The screws threadedly engage the lugs 13a so that when the screws are turned in one direction the platform 13 will move upwards, while when turned in the other direction the platform will move downwards. The rearward inclination of the platform 13 may be noted from Fig. 1. The stationary platform 12 is arranged parallel to the movable platform 13.

A plurality of normally stationary fingers 18 are arranged at right angles to the movable platform 13 and extend through slots 19 formed inwards from the rear edge of the movable platform. These fingers 18 project from a plate 20 transversely movably mounted beneath the stationary platform 12. The support of the plate 20 is accomplished by several rods 21 mounted upon the plate 20 and slidably engaging through lugs 22 projecting from the bottom face of the stationary platform 12.

A means is provided for adjusting the plate 20 forwards and rearwards to correspondingly change the positions of the fingers 18. This means includes a screw 23 which is threadedly engaged through a lug 24 projecting from the bottom face of the stationary platform 12. The rear end of the screw 23 is rotatively connected by a union 25 with the front edge of the plate 20. The front end of the screw 23 is provided with a wheel 26 by which it may be turned in one direction or the other. The arrangement is such that the fingers 18 may be adjusted forwards or rearwards by turning the wheel 26.

A rubber covered roller 27 and a cooperative steel roller 28 contact with each other and are rotatively mounted across the top of the frame above the platform 13. These rollers 27 and 28 have their bottom elements in a plane parallel to the plane of the platform 13. A second steel roller 29 contacts with the steel roller 28 and is also rotatively mounted across the top of the frame of the machine. A means is provided for driving one of these rollers to rotate all three. This means includes a projecting shaft 28a from the roller 28, which shaft is provided with a pulley 30. A driving belt 31 engages over this pulley and over a wheel 32 which is driven by an electric motor 33. This motor has a pulley 34 on the end of its shaft over which a belt 35 engages. The belt 35 also engages over the wheel 32.

A guide is provided for guiding sheets between the rubber roller 27 and the steel roller 28 to cause these sheets to pass between the steel rollers 28 and 29. This guide comprises a relatively stiff sheet 36 mounted upon the frame of the machine immediately above the rubber roller 27 and having a lip 36a arranged to direct paper between the rollers 28 and 29. A guide is also provided for engaging the edges of sheets stacked on the platform 13 to hold them from edgewise displacement. This guide includes a horizontal rod 39 mounted upon the frame of the machine. A pair of side rods 40 and 41 are supported at their upper ends by bushings 42 which slidably engage on the rod 39. Clamp screws 43 engage the bushings 42 for clamping the rods 40 and 41 in various fixed positions. The platform 13 is formed with slots 44 extended in from the side edges thereof so as to permit lateral adjustment of the rods 40 and 41 to engage the edges of sheets of paper of different widths.

A means is also provided for driving the platform 13 upwards to resiliently force sheets of paper thereon to engage against the rubber roller 27 and the cooperative steel roller 28. This means includes a shaft 45 which is rotatively supported between the side walls 10 and which is provided with bevel gears 46 bevel gears 47 mounted upon the bottom ends of the screws 14. A large worm gear 48 is also mounted on the shaft 45 and is engaged by a worm pinion 49 on a shaft 50 which is rotatively supported on one of the side walls 10 and upon which the wheel 32 is freely rotatively mounted. The wheel 32 has one side hollowed out to form a cavity 51. At diametrically opposite sides of this cavity there are flat elements 52 which are adapted to be gripped by a pair of shoes 53. These shoes are mounted upon the ends of fork members 54 which extend towards each other and which are pivotally mounted on the shaft 50 by a pintle 55. The inner ends of the members 54 rest against a disc 56 which is resiliently urged against the members 54 by a spring 57. This spring is coaxially mounted on a stationary screw 58. The screw 58 is supported by an arm 59 which is mounted on a bracket 60 fixedly mounted on one of the side walls 10.

A wheel 61 is threadedly engaged on the screw 58 and abuts one end of the spring 57. The arrangement is such that the wheel 61 may be manually turned to adjust the tension of the spring 57. This adjustment will control the gripping of the shoes 53 with the elements 52 or the slipping of the parts at these points.

A receiving mechanism is provided for receiving the folded sheets as they leave the folding machine. This receiving mechanism includes a stacking platform 63 which is vertically mounted on vertical members 64 and 65. The platform 63 is resiliently supported by springs 66. A guide sheet 67 is mounted on the top of the member 64 and is adapted to guide the folded sheets on the stacking platform 63. Further details of the receiving and stacking platform will not be given in this specification as it forms no part of the invention and similar platforms are generally used at the present time on printing machines, folding machines, and other types of kindred machinery.

The operation of the device is as follows:

The sheets to be folded are placed upon the platform 13. Since the platform leans rearwardly the sheets will all rest against the support fingers 18. The wheel 26 may be adjusted to move the fingers 18 forwards or rearwards so as to place the sheets in proper positions relative to the folding rollers 27 and 28 so that the folds will come out at the proper place when the machine operates. The guides 40 and 41 are then adjusted to engage against the side edges of the stack of sheets on the platform 13. The electric motor 33 is now set into operation. Rotations from the motor will be transmitted to the wheel 32 and thence by the belt 31 to drive the rollers 27, 28 and 29.

Rotations from the wheel 32 may also be transmitted to the shaft 50 depending upon the tension of the spring 57. Assume that the tension of this spring when the machine is set into operation is such that no rotations are transmitted. The operator then turns the wheel 61 to increase the tension of the spring 57 until such time that the shoes 53 grip the elements 52. Rotations from the wheel 32 will now be transmitted to the shoes 53, the forks 54, and thus to the shaft 50. The shaft 50 is now turning and drives the worms 49, 48 and the shaft 45.

Rotations from the shaft 45 are transmitted to the screws 14 which move the platform 13 upwards. The platform will soon reach a position in which the top sheet of paper presses with a certain pressure against the rollers 27 and 28. This pressure may be controlled by controlling the tension of the spring 57. This pressure cannot be exceeded since the elements 52 will have the tendency of idling past the shoes 53, and hence the shaft 50 stops turning. This indirectly causes the platform 13 to cease moving upwards. The top sheet of paper will now be folded.

In Fig. 4 this is schematically illustrated. The sheet is indicated by reference numeral 70. It should be noted that the rubber roller 27 starts the fold at the area 70a. Soon this area engages in between the rollers 27 and 28 and so the fold is completed. The folded sheet will discharge from between the rollers 28 and 29 to the loading platform 63. In Fig. 4 one of the guiding fingers 18 is shown properly engaged against the rear edge of the sheet 70. After a certain number of the sheets have been folded the platform 13 will automatically move up a short distance. In this manner the operation continues until all of the sheets on the platform 13 have been folded.

While I have illustrated and described the preferred embodiment of my invention, it is to be understood that I do not limit myself to the precise construction herein disclosed and the right is reserved to all changes and modifications coming within the scope of the invention as defined in the appended claims.

Having thus described my invention, what I claim as new, and desire to secure by United States Letters Patent is:

1. In a paper folding machine, a frame, a platform upon which sheets of paper to be folded are rested in a stacked position, rollers for folding said sheets of paper mounted on said frame above said platform, vertical screws rotatively mounted on said frame along the sides of said platform, lugs formed on the sides of said platform and through which said screws threadedly extend, and means for rotating said screws to progressively raise said platform bringing the sheets of said stack into contact with said rollers to be successively folded thereby, comprising a shaft rotatively supported on said frame beneath said vertical screws and at right angles thereto, bevel gears mounted on the lower ends of said screws, complementary bevel gears mounted on

said shaft and meshing with said bevel gears, a gear mounted on an intermediate portion of said shaft, a second shaft rotatively supported on said frame and extending parallel to said shaft, a pinion mounted on said second shaft and meshing with said gear, a pulley freely mounted on said second shaft, means for rotating said pulley, and resilient means for locking said pulley to said second shaft for rotating said second shaft to raise said platform when there is a space between the topmost sheet of said stack and said rollers.

2. In a paper folding machine, a frame, a platform upon which sheets of paper to be folded are rested in a stacked position, rollers for folding said sheets of paper mounted on said frame above said platform, vertical screws rotatively mounted on said frame along the sides of said platform, lugs formed on the sides of said platform and through which said screws threadedly extend, and means for rotating said screws to progressively raise said platform bringing the sheets of said stack into contact with said rollers to be successively folded thereby, comprising a shaft rotatively supported on said frame beneath said vertical screws and at right angles thereto, bevel gears mounted on the lower ends of said screws, complementary bevel gears mounted on said shaft and meshing with said bevel gears, a gear mounted on an intermediate portion of said shaft, a second shaft rotatively supported on said frame and extending parallel to said shaft, a pinion mounted on said second shaft and meshing with said gear, a pulley freely mounted on said second shaft, means for rotating said pulley, and resilient means for locking said pulley to said second shaft for rotating said second shaft to raise said platform when there is a space between the topmost sheet of said stack and said rollers, said means being adapted to slip when the topmost sheet of said stack is engaging against said rollers to permit said pulley to turn independently of said second shaft to prevent said platform from being raised until the topmost sheet is completely folded.

3. In a paper folding machine, a frame, a platform upon which sheets of paper to be folded are rested in a stacked position, rollers for folding said sheets of paper mounted on said frame above said platform, vertical screws rotatively mounted on said frame along the sides of said platform, lugs formed on the sides of said platform and through which said screws threadedly extend, and means for rotating said screws to progressively raise said platform bringing the sheets of said stack into contact with said rollers to be successively folded thereby, comprising a shaft rotatively supported on said frame beneath said vertical screws and at right angles thereto, bevel gears mounted on the lower ends of said screws, complementary bevel gears mounted on said shaft and meshing with said bevel gears, a gear mounted on an intermediate portion of said shaft, a second shaft rotatively supported on said frame and extending parallel to said shaft, a pinion mounted on said second shaft and meshing with said gear, a pulley freely mounted on said second shaft, means for rotating said pulley, and resilient means for locking said pulley to said second shaft for rotating said second shaft to raise said platform when there is a space between the topmost sheet of said stack and said rollers, said means being adapted to slip when the topmost sheet of said stack is engaging against said rollers to permit said pulley to turn independently of said second shaft to prevent said platform from being raised until the topmost sheet is completely folded, said pulley being formed in one of its faces with a cavity having flat elements formed on diametrically opposite sides thereof, said resilient means, comprising fork members pivotally mounted on said second shaft, shoes mounted on one of the ends of said fork members and engageable with the peripheral wall of said cavity, and means for urging said forks to spread said shoes to cause the same to frictionally engage said flat elements and lock said pulley to said second shaft.

4. In a paper folding machine, a frame, a platform upon which sheets of paper to be folded are rested in a stacked position, rollers for folding said sheets of paper mounted on said frame above said platform, vertical screws rotatively mounted on said frame along the sides of said platform, lugs formed on the sides of said platform and through which said screws threadedly extend, and means for rotating said screws to progressively raise said platform bringing the sheets of said stack into contact with said rollers to be successively folded thereby, comprising a shaft rotatively supported on said frame beneath said vertical screws and at right angles thereto, bevel gears mounted on the lower ends of said screws, complementary bevel gears mounted on said shaft and meshing with said bevel gears, a gear mounted on an intermediate portion of said shaft, a second shaft rotatively supported on said frame and extending parallel to said shaft, a pinion mounted on said second shaft and meshing with said gear, a pulley freely mounted on said second shaft, means for rotating said pulley, and resilient means for locking said pulley to said second shaft for rotating said second shaft to raise said platform when there is a space between the topmost sheet of said stack and said rollers, said means being adapted to slip when the topmost sheet of said stack is engaging against said rollers to permit said pulley to turn independently of said second shaft to prevent said platform from being raised until the topmost sheet is completely folded, said pulley being formed in one of its faces with a cavity having flat elements formed on diametrically opposite sides thereof, said resilient means, comprising fork members pivotally mounted on said second shaft, shoes mounted on one of the ends of said fork members and engageable with the peripheral wall of said cavity, and means for urging said forks to spread said shoes to cause the same to frictionally engage said flat elements and lock said pulley to said second shaft, said latter means, comprising a disc freely mounted on said second shaft and bearing against the free ends of said fork members, a spring coaxially mounted on said second shaft and engaging the free face of said disc, and a wheel threadedly mounted on said second shaft and bearing against the other end of said spring, whereby when said wheel is adjusted it increases the tension of said spring spreading said fork members and causing the shoes to engage said flat members.

5. In a paper folding machine, a frame, a platform movably mounted on said frame and upon which sheets of paper to be folded are rested in a stacked position, rollers for folding said sheets of paper mounted on said frame above said platform, means for raising said platform bringing the sheets of paper forming said stack successively into contact with said rollers to be successively

folded thereby, and means for shifting the position of said stack of sheets on said platform relative to said rollers causing said fold to be formed at various positions across said sheets, comprising a stationary platform mounted on said frame beneath said movable platform, a plate beneath said stationary platform, a plurality of fingers extending upwards from said plate and passing through aligned slots extending inwards from the rear edges of said platforms and against which the rear edges of said sheets are adapted to rest, means for slidably supporting said plate on said stationary platform, and means for holding said plate in various adjusted positions.

6. In a paper folding machine, a frame, a platform movably mounted on said frame and upon which sheets of paper to be folded are rested in a stacked position, rollers for folding said sheets of paper mounted on said frame above said platform, means for raising said platform bringing the sheets of paper forming said stack successively into contact with said rollers to be successively folded thereby, and means for shifting the position of said stack of sheets on said platform relative to said rollers causing said fold to be formed at various positions across said sheets, comprising a stationary platform mounted on said frame beneath said movable platform, a plate beneath said stationary platform, a plurality of fingers extending upwards from said plate and passing through aligned slots extending inwards from the rear edges of said platforms and against which the rear edges of said sheets are adapted to rest, means for slidably supporting said plate on said stationary platform, and means for holding said plate in various adjusted positions, said first-mentioned means, comprising lugs mounted on the bottom face of said stationary platform and at the sides thereof, and rods mounted on and extending at right angles to said plate and slidably extended through openings formed in said lugs.

7. In a paper folding machine, a frame, a platform movably mounted on said frame and upon which sheets of paper to be folded are rested in a stacked position, rollers for folding said sheets of paper mounted on said frame above said platform, means for raising said platform bringing the sheets of paper forming said stack successively into contact with said rollers to be successively folded thereby, and means for shifting the position of said stack of sheets on said platform relative to said rollers causing said fold to be formed at various positions across said sheets, comprising a stationary platform mounted on said frame beneath said movable platform, a plate beneath said stationary platform, a plurality of fingers extending upwards from said plate and passing through aligned slots extending inwards from the rear edges of said platforms and against which the rear edges of said sheets are adapted to rest, means for slidably supporting said plate on said stationary platform, and means for holding said plate in various adjusted positions, said latter-mentioned means, comprising a lug mounted on the bottom face of said stationary platform, and a screw having its intermediate portion threadedly engaged through said lug and its rear end rotatively attached to the front edge of said plate.

FREDRICK BRILLAS.