Nov. 24, 1931. A. E. STACEY, JR 1,833,383

REGULATOR AND THE LIKE

Filed April 14, 1928

Fig. 1.

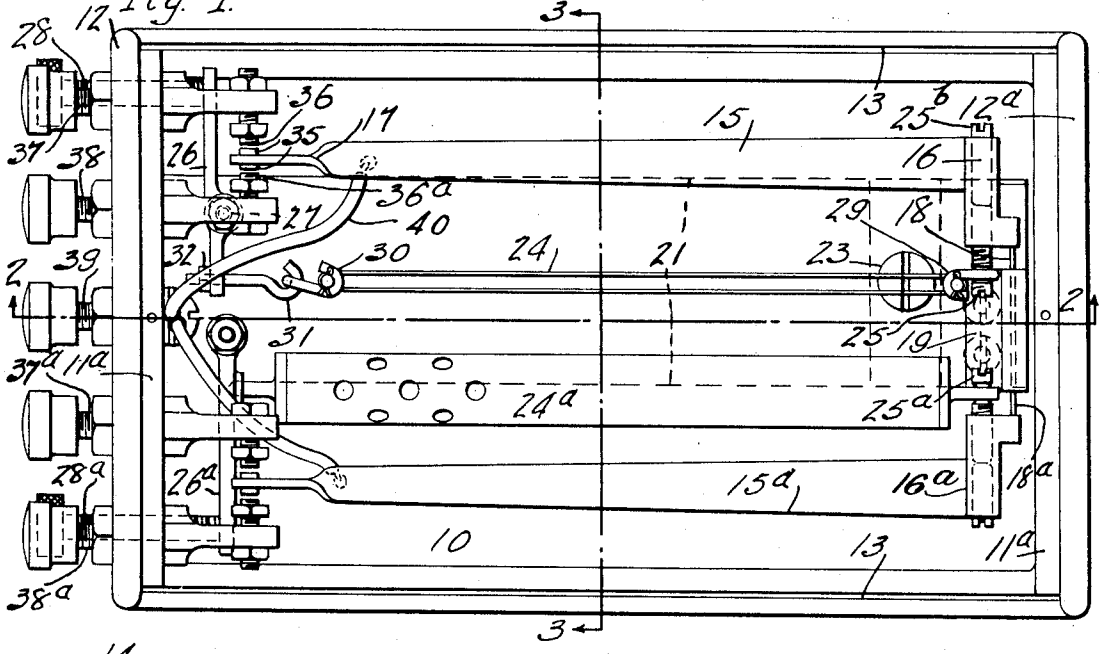

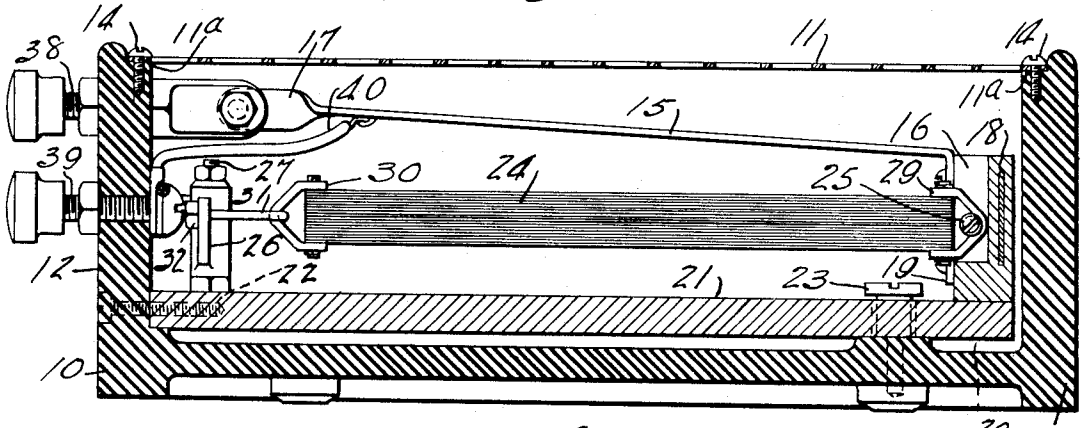

Fig. 2.

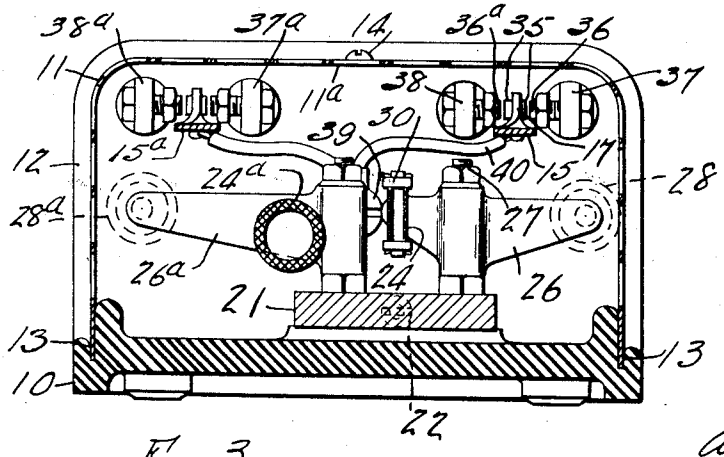

Fig. 3.

INVENTOR.
Alfred E. Stacey, Jr.
by Parker & Prochnow
ATTORNEYS.

Patented Nov. 24, 1931 1,833,383

UNITED STATES PATENT OFFICE

ALFRED E. STACEY, JR., OF ESSEX FELLS, NEW JERSEY, ASSIGNOR TO CARRIER ENGINEERING CORPORATION, OF NEWARK, NEW JERSEY

REGULATOR AND THE LIKE

Application filed April 14, 1928. Serial No. 270,142.

This invention relates to improvements in regulators or the like instruments such as hygrostats and thermostats which comprise a sensitive element that responds to changes in humidity, temperature or other force that produces a change of dimension or form of the sensitive element which is utilized through electrical or other suitable instrumentalities for control or other purposes. The instrument forming the subject matter of this invention may be either a thermostat, hygrostat or other regulator, depending upon whether the sensitive element employed therein responds to changes in temperature or other phenomenon. The instrument herein described and illustrated in the drawings is equipped with a hygroscopic element for controlling humidity and also with a thermoresponsive element for controlling temperature and shows the application of the invention to both these types of regulators, but either regulator could be employed alone.

Slight changes in humidity or temperature produce only relatively small changes in dimension or form in most materials, and for an instrument to be commercially practical to effect regulation accurately in accordance with small changes in humidity or temperature, it should be constructed so that a relatively minute change in the sensitive element will produce a relatively much greater movement of the control member which it actuates, and without lost motion, and the instrument must have great precision of operation so that like changes in the sensitive element will always produce precisely corresponding movements in the control member. At the same time, the instrument should be of simple and sturdy construction capable of easy adjustment so that it will be reliable in operation and durable.

One object of my invention is to produce a regulator or control instrument having these qualifications.

Other objects are to produce a practical and reliable instrument, of simple, compact, inexpensive and durable construction, which is adapted to respond with precision to slight changes of humidity or temperature affecting the sensitive element of the instrument; also to construct the instrument so that it will be extremely sensitive and so that irrespective of possible inaccuracies of manufacture in different instruments, they will all have like precision and sensitiveness of operation; also to produce an instrument which can be readily adjusted to effect different desired controlling actions or operate to maintain different desired humidities or temperatures with great accuracy; and also to improve regulating devices in the other respects hereinafter described and set forth in the claims.

In the accompanying drawings:

Fig. 1 is a plan view of a combined electrical hygrostat and thermostat embodying my invention.

Fig. 2 is a longitudinal, sectional elevation thereof on line 2—2, Fig. 1.

Fig. 3 is a transverse, sectional elevation thereof looking in the direction of the arrows on line 3—3, Fig. 1.

10 represents a base or support on which the operative parts of the regulator are mounted. This base may be made of suitable material having a low coefficient of expansion and conductivity and is provided with a removable cover 11 to form a protecting housing for the movable parts of the instrument. The cover 11 shown is of U-shape with a curved top and rests at its ends on shoulders 11*a* on the inner sides of upright end portions 12 and 12*a* of the base 10, the longitudinal side edges of the cover being seated and confined in longitudinal grooves 13 in the base near the opposite side edges thereof.

The cover can be removably secured on the base by screws 14 or other suitable means. A base or housing of any other suitable construction could be employed.

Both a hygrostat and a thermostat are shown mounted on the base 10.

Describing first the hygrostat:

15 represents the movable control arm or member thereof. This arm preferably consists of a flat metal bar having one end bent and rigidly secured by screws or otherwise to a block 16, while the other end 17 of the arm 15 is twisted at right angles to the plane of the main portion of the arm. The control arm is hinged or pivotally mounted by means

of a flat spring piece 18 which is rigidly attached at one end to the block 16 and at the opposite end to a stationary block 19, which in the construction shown, is secured by means not shown on one end of a supplemental base plate 21 which rests on reduced top projections on the base 10 and is secured at one end by a screw 22 to the upright end 12 of the base 10. A screw 23 passing loosely through a hole of larger diameter in the plate 21 and screwed into the base 10 holds the plate 21 in position. The plate 21 is made of some suitable material having a very low temperature coefficient, so as to get the full effect of the expansion of the thermostatic element, hereinafter described, which is shown as being mounted on the plate 21. This construction prevents expansion of the base which might otherwise reduce the effectiveness of the expansion of the thermostatic element. The spring fulcrum or hinge piece 18 is adapted to flex and thus permit the control arm to swing in opposite directions, as if the control arm were fulcrumed to turn on a pivot, but the rigidly anchored spring prevents lost motion between the arm and its support, such as might occur with wear or looseness in an ordinary pivotal connection.

24 represents the sensitive element, which as here shown, consists of an endless band of strands of silk or other suitable hygroscopic material arranged substantially parallel with the control arm 15. This band is adjustably connected at one end to the hinge block 16 of the control arm near the hinge spring 18, preferably by an adjusting screw 25, and its opposite end is connected to one arm of an adjusting lever 26 which is suitably fulcrumed at 27 between its ends on the base plate 21, with the opposite arm on the lever bearing against the inner end of an adjusting screw 28, which turns in a threaded hole in the upright end 12 of the base. As shown, the hydroscopic element 24 is provided at its opposite ends with wire loops 29 and 30, the former being hooked on the adjusting screw 25 at the hinge end of the control arm and the other loop 30 engaging a hook 31 having a screw threaded shank which passes through a hole in the short arm of the adjusting lever 26 and is furnished with an adjusting nut 32 for tightening the hydroscopic band.

It will be noted that the adjusting screw 25 extends substantially in the direction of the hinge spring 18 to the opposite side of the fulcrum point of the control arm from the hinge block 16, so that by adjusting the screw 25 in or out, the point of attachment of the hygroscopic element to the control arm can be adjusted nearer to or farther from the fulcrum point, thereby changing the movement of the arm produced by a given change of dimension of the hygroscopic element. This adjustment changes the sensitiveness of the instrument, since the ratio between the movements of the hygroscopic element and the control arm is thereby varied. In order to make the instrument sensitive enough to respond with precision to minute changes in the sensitive element, the point of attachment of the sensitive element to the control arm must be definitely located with respect to and very close to the fulcrum point. The screw 25 can be locked when adjusted by any suitable means, such as a lock screw 25*b*.

On account of possible differences in the hinge springs and unavoidable inaccuracies in manufacture, the fulcrum point or point of flexure of the spring in different instruments may vary slightly. The adjustment provided by the screw 25 enables the ratio of movements to be readily set so as to insure the required sensitiveness of the instrument and also insure like precise action in different instruments.

By adjusting the lever 26 by means of the screw 28, the instrument can be readily set to act in accordance with different desired humidities. By screwing the adjusting screw 28 inwardly, the short arm of the adjusting lever 26 will be moved to increase the tension on the hygroscopic element 24, while by screwing the adjusting screw outwardly, the tension on the element 24 will be decreased, thus setting the instrument for different humidities.

The free end of the control arm 15 may be provided with contact points 35 arranged between opposite contact points 36, 36*a* on two binding posts 37 and 38 secured to the end 12 of the base 10.

The movement of the control arm 15 by the expansion and contraction of the sensitive element is thus adapted to place the contact points on the arm into or out of contact with one or the other of the contacts 36, 36*a* for making and breaking electrical control circuits including the binding posts 37, 38 and a third binding post 39 which is in electrical connection as by a flexible conductor 40 with the control arm, in a well known manner. Different instrumentalities could, however, be utilized for effecting control by the movements of the control arm.

By the described construction and relative arrangement of the control arm, and sensitive element, the instrument as a whole is small and compact. Nevertheless the several parts are all of substantial size and strong construction, so that while the instrument is extremely sensitive in operation, it is yet of sturdy and durable construction.

The thermostat is substantially similar in construction to the hygrostat above described. The control arm 15*a* thereof is constructed and pivotally mounted by a spring hinge piece 18*a* in the same manner as the control arm 15 and cooperates with contacts on binding posts 37*a* 38*a* in the same manner.

The thermoresponsive element 24*a* which may be made of any suitable material, is arranged parallel with the control arm 15*a* and is connected at one end to the hinge block 16*a* of the arm by an adjusting screw 25*a* which is arranged and effects adjustment for sensitiveness in the same manner as the screw 25 of the hygrostat. Likewise, the opposite end of the thermoresponsive element is in operative connection with an adjusting lever 26*a* which, like the lever 26 of the hygrostat, is adapted to be adjusted by a screw 28*a* to set the thermostat to act in accordance with different desired temperatures.

The advantages incident to the construction explained before in connection with the hygrostat apply equally to the thermostat.

I claim as my invention:

1. In a regulator or the like, the combination of a sensitive element responsive to changes in the medium affecting the same, a movable controlling arm mounted to swing about a fulcrum point, means cooperating with said controlling arm for effecting regulation, a connection between said sensitive element and said controlling arm near said fulcrum point whereby the controlling arm is moved by said sensitive element, said connection being adjustable, an adjusting screw by which the point of connection between the sensitive element and the movable arm is shifted and secured in adjusted positions for changing the ratio between the movements of the sensitive element and the controlling arm, a lever to which said sensitive element is operatively connected, and means for adjusting said lever.

2. In a regulator or the like, the combination of a sensitive element adapted to expand and contract, a movable controlling arm mounted to swing about a fulcrum point, means cooperating with said controlling arm for effecting regulation, said sensitive element being connected to said controlling arm near said fulcrum point for moving said arm, an adjusting device by which the point of connection between said sensitive element and the controlling arm is shifted for changing the ratio between the movements of the sensitive element and the controlling arm, a lever to which said sensitive element is operatively connected, and means for adjusting said lever.

3. In a regulator or the like, the combination of a sensitive element adapted to expand and contact, a movable controlling lever having a short arm and a long arm rigid with the short arm and arranged substantially parallel with said sensitive element and mounted to swing about a fulcrum point, said sensitive element being connected at one end to said short arm near said fulcrum point for moving said controlling lever, means cooperating with the long arm of said lever for effecting regulation, an adjusting device by which the point of connection between the sensitive element and said short arm is shifted for changing the ratio between the movements of the sensitive element and the controlling lever, a lever operatively connected to the opposite end of said sensitive element, and means for adjusting said lever.

4. In a regulator or the like, the combination of a sensitive element adapted to expand and contract, a movable controlling lever having a short arm and a long arm rigid with the short arm and arranged substantially parallel with said sensitive element and mounted to swing about a fulcrum point, means cooperating with the long arm of said lever for effecting regulation, a screw connecting one end of said sensitive element to said short arm adjacent said fulcrum point, said screw being adjustable to shift the point of connection between the sensitive element and said short arm and secure the same in adjusted positions for changing the ratio between the movements of the sensitive element and the controlling lever, a lever operatively connected with the opposite end of the sensitive element, and a screw for adjusting said lever.

5. In a regulator or the like, the combination of a sensitive element adapted to expand and contract responsive to changes in the medium affecting the same, a movable controlling arm extending substantially parallel with said sensitive element and mounted to swing about a fulcrum point, means cooperating with said controlling arm for effecting regulation, a connection between said sensitive element and said controlling arm near said fulcrum point whereby the controlling arm is moved by said sensitive element, said connection being adjustable to shift the connecting point between said element and arm towards and from said fulcrum point for changing the ratio between the movements of the sensitive element and the controlling arm, and an adjusting screw by the turning of which said connection is adjusted toward and from said fulcrum point and which secures said connection in its adjusted positions.

ALFRED E. STACEY, JR.