Aug. 26, 1941. B. McINNERNEY 2,253,717

MEANS FOR THE PREVENTION OF VAPOR LOCK IN THE FUEL FEED OF INTERNAL COMBUSTION ENGINES

Filed June 4, 1940

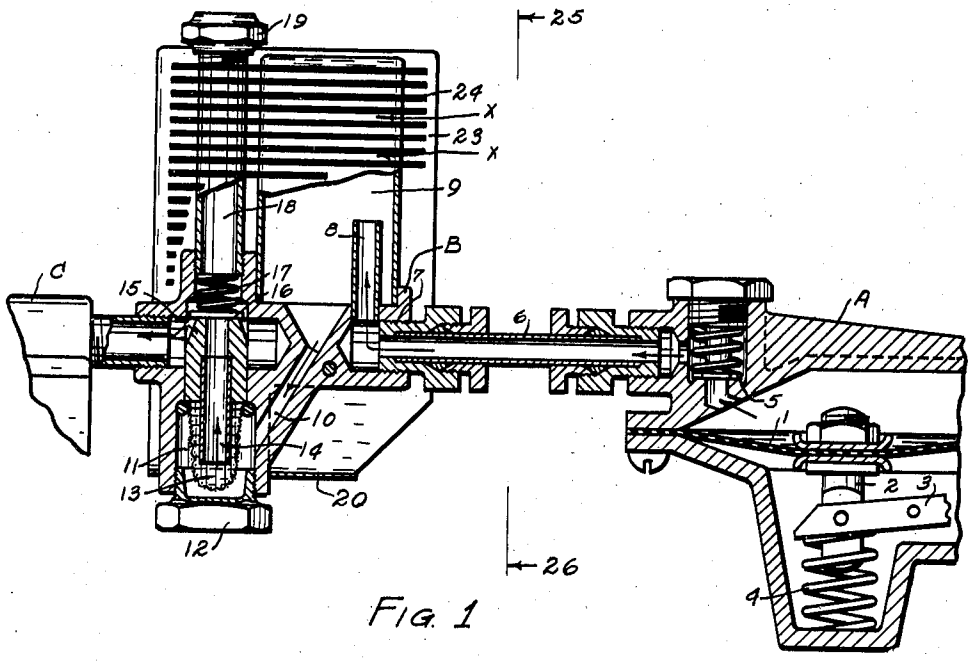

FIG. 1

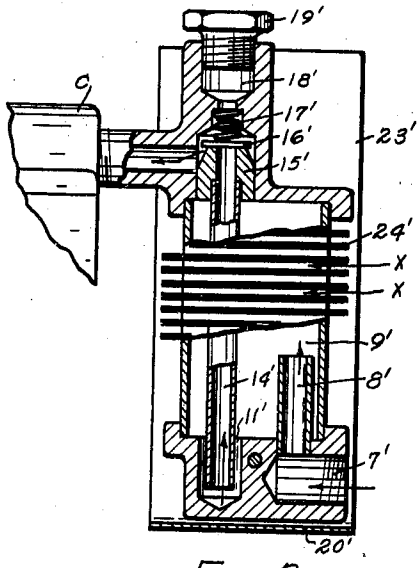

FIG. 3.

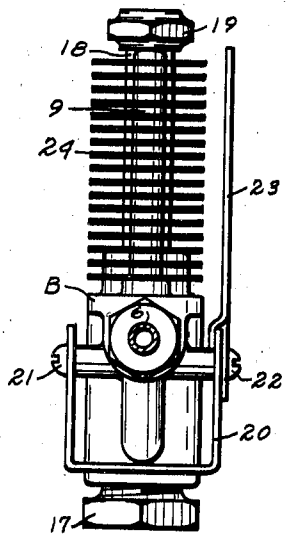

FIG. 2

Inventor:

Benjamin McInnerney

Patented Aug. 26, 1941

2,253,717

UNITED STATES PATENT OFFICE

2,253,717

MEANS FOR THE PREVENTION OF VAPOR LOCK IN THE FUEL FEED OF INTERNAL COMBUSTION ENGINES

Benjamin McInnerney, Omaha, Nebr.

Application June 4, 1940, Serial No. 338,706

8 Claims. (Cl. 123—139)

My invention relates to improved means for preventing the accumulation of vapor in the pump and tubes which supply and conduct fuel from the fuel tank to the carbureter of an internal combustion engine. Details relating to other objects which may be included in the construction of the apparatus will also be disclosed in this application.

It is common practice to use an engine driven pump for the purpose of forcing fuel to the carbureter of an automobile engine. The pump usually has a diaphragm which is flexed in one direction by a moving part of the engine to draw fuel from the supply tank to fill the suction pipe and pump chamber, and in the opposite direction by a spring which exerts a resilient pressure on the fuel, tending to force it into the carbureter as it is consumed.

When the fuel spaces are full of fuel, and while the temperature of the fuel remains below its vaporizing point the pump may operate satisfactorily but during hot weather, and especially in high altitudes and while the car is climbing heavy grades, vapor is sometimes generated in excess of the displacement capacity of the pump; this results in the fuel spaces becoming partially filled with vapor which displaces the liquid fuel and if not arrested it finally forms the commonly known vapor lock; causing the engine to lose power and sometimes stop because of insufficient fuel.

The principal object of my invention is to remedy this condition and I attain this object by the use of the apparatus illustrated in the accompanying drawing, in which:

Figure 1 includes a vertical section of the fuel outlet portion of a typical pump, which is designated by the letter A, a vertical section showing one form of my invention in its preferred position, designated B, and a partial elevation of the fuel inlet portion of a typical carburetor, designated C. Figure 2 is an end elevation of my apparatus B viewed from line 25—26. Figure 3 is a vertical section of a simpler form of the apparatus which is adapted to installation in places where there may not be room for the form shown in Figures 1 and 2. Similar numerals refer to similar parts throughout the drawing.

Pump A, Figure 1, is provided with diaphragm 1 and stud link 2; this assembly is moved downward by lever 3 which is actuated by a moving part of the engine; usually an eccentric on the cam shaft. The downward movement of the diaphragm serves to draw fuel into the pump chamber, while compression spring 4 urges the diaphragm upward between strokes, thus providing a resilient pressure on the fuel, forcing it through outlet check 5 and tube 6, which is connected to apparatus B at 7. The parts thus far described are typical of those now in common use.

My apparatus B, Figure 1, is provided with inlet opening 7, upwardly extending tube 8, condensing chamber 9, downward extending passage 10, and fuel bowl 11 which has for its principal purpose to provide means for submerging the lower end of tube 14 so long as any fuel remains in the condensing chamber.

Fuel bowl 11 is also adapted to act as a sediment trap and screen chamber by being provided with plug 12, which may be removed to flush out any accumulated sediment, and screen 13 through which the fuel passes to the lower end of tube 14, which leads upward to valve seat 15.

Valve seat 15 may be a forced fit in casing B or it may be threaded into place. Disk valve 16 is seated on the upper face of seat 15 and is held seated by spring 17, thereby preventing fuel flow-back from the carbureter.

Tube 18, the upper end of which is closed by cap 19 serves to store a small amount of fuel, which may be drawn into the carbureter by the suction therefrom during the time required to condense an unusual surge of vapor. It may also serve to prime the carbureter in case the fuel spaces are empty, as in case the car has been unused for some time or after repairs which required draining the carbureter; thus avoiding the drain on the battery which would result from rotating the engine long enough to enable the pump to fill the fuel spaces.

Heat deflector 20 is attached to the base of apparatus B by screws 21—22. An extension 23 is adapted to be placed at either side in position to deflect the direct heat of the engine from condensing chamber 9. In many installations a shield on one side serves but the V type engine usually has the carbureter directly above and between the heated cylinders, making it desirable to install two extensions 23.

Condensing chamber 9 is preferably made of thin copper tubing, closed at the top and flattened as shown in order to spread the contents thinly against a relatively large radiating area. I prefer to further increase the radiating area by means of the thin metal fins 24.

I shall now refer to Figure 3 which is adapted to installations in which the room above the carbureter inlet is limited, and which is shown somewhat simpler than the form shown in Figure

1, in that it does not include the sediment trap and screen, although it is obvious that these elements may be added if desired. The form shown in Figure 3 includes the main operating features heretofore described. The fuel enters at 7' and is forced upward through tube 8' into condensing chamber 9', then downward into fuel bowl 11', upward through submerged lower end of tube 14' valve seat 15' and under check valve 16' into carbureter C, while chamber 18' is adapted to store reserve fuel as heretofore described while referring to the form shown in Figure 1.

I shall now describe the operation of my invention. While the engine is running a stream of air is being forced into the engine space by the radiator fan, this air stream passes between fins 24—24' and in contact with the outside surfaces of chamber 9—9' as shown by the arrowed lines *x*—*x*, tending to lower the temperature of chamber 9—9'.

In case vapor forms in the fuel the vapor bubbles follow the natural law of vapor in liquid and collect in the upper portion of the fuel passage. As they pass into chamber 9—9' they are directed upward toward the top of the chamber by tube 8—8' and are there condensed into liquid fuel which occupies much less space, thus a vacuum is created, which, in case the carbureter fuel valve is closed, assists in drawing fuel through the tubes and pump, and thus by filling the fuel spaces with liquid assists in restoring the pump to normal operation.

In case the fuel has lowered in the carbureter, allowing the float to drop and open the carbureter fuel valve, and if no means are provided to prevent fuel flow-back from the carbureter and storage chamber 18—18' the vacuum resulting from condensation of vapor would tend to draw fuel from the carbureter supply as the hydrostatic head is less than from the pump, I therefore provide check 16—16' to prevent flow-back, thus in case the carbureter fuel valve is open check valve 16—16' permits the suction resulting from vapor condensation to be exerted only to draw vapor and fuel through the pump and supply tubes, thus displacing the accumulated vapor and providing space for liquid fuel.

A condition may result from extreme heat, high altitude, or while climbing an excessive grade which lowers the fuel tank, thereby imposing added work on the pump and lowering the vaporizing point of the fuel because of the increased vacuum required, during which period an excessive surge of vapor may be formed. Tube 18—18' is adapted to store a small quantity of fuel in order to provide against loss of power during the interval required to condense this excessive vapor surge.

It will be noted that the apparatus is adapted to function in accordance with the natural laws governing the action of vapors in liquids. The fuel is forced upwards into chamber 9—9' in the upper portion of which any vapor bubbles collect and are condensed. The liquid fuel then flows downward to chamber 11—11' where outlet tube 14—14' is adapted to be submerged in liquid fuel, thus preventing the delivery to the carbureter of fuel which contains entrapped vapor. Check 16—16' prevents the flow-back of fuel from the carbureter or storage chamber 18—18' while said storage chamber is adapted to provide fuel during the time required to restore the pump to normal operation; and if desired the design is adapted to include, inexpensively, an efficient sediment trap and screen.

I claim:

1. In combination with an internal combustion engine having a fuel pump and a carbureter, a condensing chamber in series with the fuel conduit between the pump and the carbureter, means for conducting the fuel into said chamber, then downward from the lower portion of the chamber to a fuel receptacle, from the lower portion of which an upwardly extending passage leads to the carbureter.

2. In combination with an internal combustion engine having a fuel pump and a carbureter, a condensing chamber in series with the fuel conduit between the pump and the carbureter, means for conducting the fuel into said chamber, then downward from the lower portion of the chamber to a fuel receptacle, from the lower portion of which an upwardly extending passage leads to the carbureter, and a shield attached to, or forming an integral part of the assembly and adapted to deflect the direct heat of the engine from the condensing chamber.

3. In combination with an internal combustion engine having a fuel pump and a carbureter, a condensing chamber in series with the fuel conduit between the pump and the carbureter, means for conducting the fuel into said chamber, then downward from the lower portion of the chamber to a fuel receptacle, from the lower portion of which an upwardly extending passage leads to a check valve which is adapted to allow fuel to flow to the carbureter.

4. In combination with an internal combustion engine having a fuel pump and a carbureter, a condensing chamber in series with the fuel conduit between the pump and the carbureter, means for conducting the fuel into said chamber, then downward from the lower portion of said chamber to a fuel receptacle, from the lower portion of which an upwardly extending passage leads to a check valve which is adapted to allow fuel to flow to the carbureter, and a fuel storage chamber having connection with the conduit between said check valve and the carbureter.

5. In combination with an internal combustion engine having a fuel pump and a carbureter, a condensing chamber in series with the conduit between the fuel pump and the carbureter, means for conducting the fuel into said chamber, then downward from the lower portion of the chamber to a fuel receptacle, from the lower portion of which an upwardly extending passage leads to a check valve which is adapted to allow fuel to flow to the carbureter, a fuel storage chamber having connection with the conduit between said check valve and the carbureter and a normally closed opening in the upper portion of said storage chamber adapted to be opened for the purpose of priming the carbureter.

6. In combination with an internal combustion engine having a fuel pump and a carbureter, a condensing chamber in series with the fuel conduit between the pump and the carbureter, means for directing the fuel upwardly into the condensing chamber, then downwardly into a fuel receptacle which is provided with means for draining out sediment, then upwardly through an outlet leading from the lower portion of said receptacle to the carbureter.

7. In combination with an internal combustion engine having a fuel pump and a carbureter, a condensing chamber in series with the fuel conduit between the pump and the carbureter.

means for conducting the fuel into the condensing chamber, then downwardly into a fuel receptacle which is provided with means for draining, then upwardly through a screen into an outlet leading from the lower portion of said receptacle to the carbureter.

8. In combination with an internal combustion engine having a fuel pump and a carbureter, a condensing chamber in series with the fuel conduit between the pump and the carbureter, means for conducting the fuel into the condensing chamber, then downwardly into a fuel receptacle which is provided with means for draining, then upwardly through a screen and into an outlet leading from the lower portion of said receptacle to a check valve which is adapted to allow fuel to flow to the carbureter, a fuel storage chamber having connection with the conduit between the check valve and the carbureter, and a shield adapted to deflect the direct heat of the engine from the condensing chamber.

BENJAMIN McINNERNEY.