Feb. 24, 1931. F. MALLGRAF 1,793,861

DISPLAY DEVICE

Filed Nov. 27, 1928

Fig. 1.

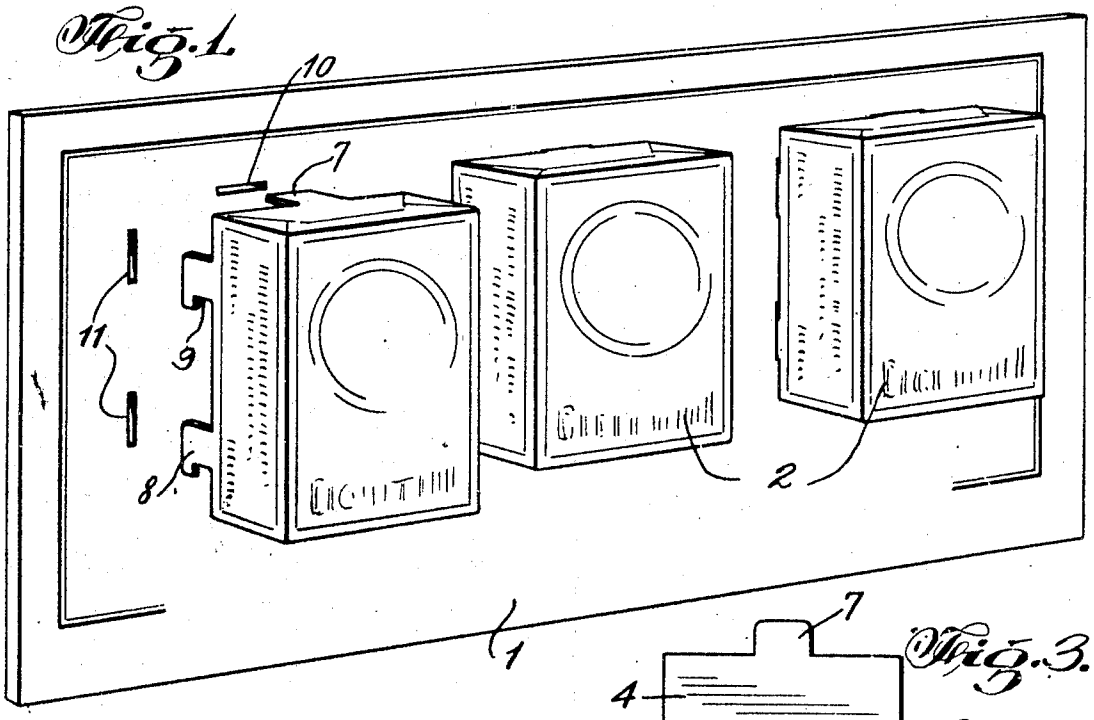

Fig. 2.

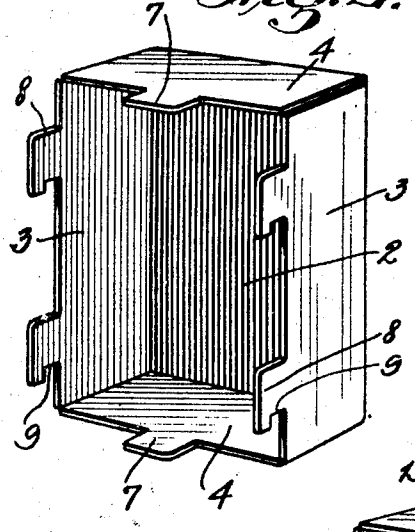

Fig. 3.

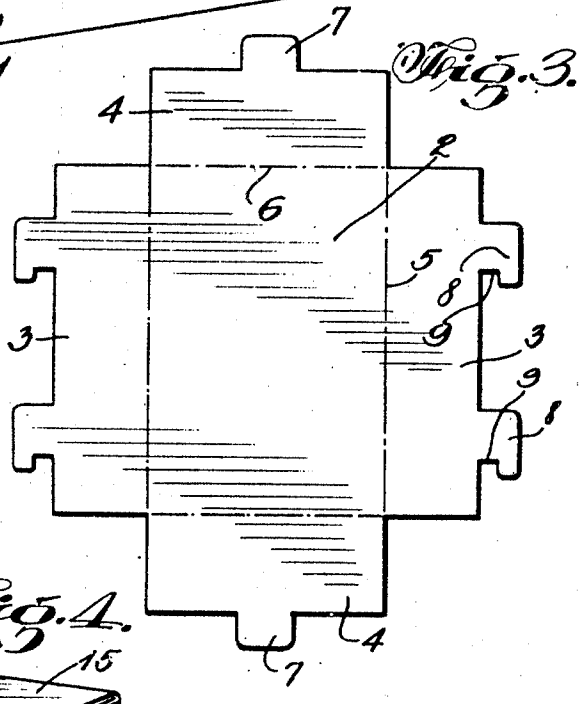

Fig. 4.

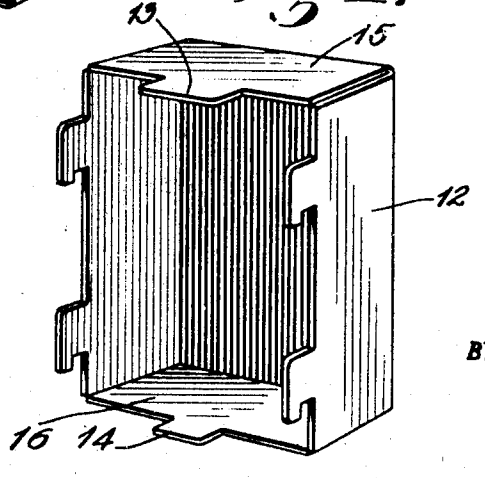

INVENTOR.
FERDINAND MALLGRAF
BY Meyer & Jones
ATTORNEYS.

Patented Feb. 24, 1931

1,793,861

UNITED STATES PATENT OFFICE

FERDINAND MALLGRAF, OF LITTLE NECK, NEW YORK, ASSIGNOR TO THE AMERICAN TOBACCO COMPANY, OF NEW YORK, N. Y., A CORPORATION OF NEW JERSEY

DISPLAY DEVICE

Application filed November 27, 1928. Serial No. 322,188.

This invention is an improvement in display devices, and more particularly in a device designed for the display of small packaged goods, such for instance, as cigarettes, and the like.

In the usual display device of this character, containers in which the particular merchandise is packed, are secured to the support, which provides a background, usually in a regular figure, such for instance, as an arch or circle.

The display is expensive, not only because of the cost of the containers, but by reason of the labor required to attach the containers to the background.

Furthermore, the containers are very liable to become displaced, and in addition they soon become soiled, so that the display is no longer attractive.

In shipping display devices of this character, care must be taken to properly box the same, in order that the containers will not become crushed, and the packing increases the cost of the device.

One of the primary objects of the present invention is the provision of a device of the character in question, wherein dummy containers of low cost are provided for connection with a suitable background.

Another object is the provision of a type of dummy having means interengaging with cooperating means on the background to firmly connect the dummy to the background, without the necessity for extraneous fastening means.

Another object is the provision of a type of dummy and background, wherein the dummy or dummies are easily and quickly attached or detached, to enable the replacement of the exhibit when it becomes soiled.

Another object is the provision of a dummy which will present the appearance of a package of the goods, which may be constructed of a minimum of material, and which is capable of being stamped or otherwise formed from sheet material in any required number.

Another object is the provision of a connection between the dummy and the background of a nature such that the dummy must be placed in a selected position with respect to the background before it can be connected therewith.

With these and other objects in view the invention consists in the construction and novel combination of parts fully described hereinafter, illustrated in the accompanying drawings, and pointed out in the claims appended hereto, it being understood that various changes in the form, proportion, size and minor details of construction within the scope of the claims, may be resorted to without departing from the spirit of the invention.

In the drawings forming a part hereof:—

Fig. 1 is a perspective view of the improved device, with one of the dummies detached.

Fig. 2 is a perspective view of a dummy looking from the rear.

Fig. 3 is a plan view of a dummy in the flat.

Fig. 4 is a view similar to Fig. 2, showing an alternate construction.

In the present embodiment of the invention, a suitable support 1 is provided, forming a background for the display, and it is apparent that the support may be of any size, shape and character that may be desired or found suitable for the purpose.

Dummies are connected with the support, each dummy being of the shape when folded of the package which it is intended to represent, and carrying the same character of display matter, printed or otherwise impressed thereon. As for instance, in a cigarette display, each dummy will be of the size of a package of cigarettes, and upon the outer face of the dummy there will be printed or otherwise impressed the same matter that would appear on the exposed faces of a package, were it secured in the place of the dummy.

Each dummy, as shown in Fig. 3, comprises a body 2, side folds 3 to form the side walls, and end folds 4 to form end walls. The dummies are stamped, cut or otherwise formed from suitable sheet material, and in the flat are of the outline shown in Fig. 3.

Crease lines 5 and 6 are formed between the side and end folds 3 and 4, respectively, and the body, and when these end folds are bent at right angles to the body in the manner shown in Fig. 2, an open box like struc-

ture is provided. Each end fold 4 has a tongue 7, in the present instance, midway of the ends of the fold, and each side fold 3 has a pair of tongues 8 provided near the ends of the fold. The lower edges of the tongues 8 are notched or undercut, as shown at 9, adjacent to the flap, for a purpose to be presently described.

The dummies are arranged on the background in any suitable manner and to form any figure desired. In the present instance, they are shown as arranged side by side, three in number, but they are so shown merely for convenience. The background is provided at the location to be occupied by each dummy with a pair of vertically spaced parallel slots 10 extending horizontally, and with a plurality of pairs of slots 11, the said slots extending vertically. The members of each pair are in alinement, and the pairs are spaced apart laterally. The locations of the slots 10 and 11 correspond with the locations of the tongues 7 and 8 of the dummies, and they are spaced in accordance with the spacing of the said tongues, so that the tongues of each dummy may be entered into the slots of the background at the location which the dummy is to occupy in the display.

After the tongues 7 and 8 have been entered into the slots 10 and 11, the dummy is moved downwardly slightly, so that the lower ends of the slots 11 move into the notches 9, and the dummy is thus locked to the background. It will be understood that the slots 10 are so placed, that when the tongues are interlocked in the slots 11, as above described, the end walls of the dummy are substantially horizontal, and register with the upper ends of the side walls.

In order to insure that the dummies will be correctly placed on the background, that is, each right side up, the arrangement shown in Fig. 4 may be used. In this arrangement the dummy 12 has the tongues 13 and 14 at the upper and lower folds 15 and 16 respectively of different width. That is, the tongue 13 is wider than the tongue 14, and the slots 10 on the background for receiving the tongues are likewise of different lengths to correspond with the respective widths of the tongues. With this arrangement, the dummy must be placed right side up, or the tongues 13 and 14 will not fit the slots.

It will be apparent that many other methods might be used to insure the proper placing of the dummies. As for instance, the notches 9 serve as a guide, so that the dummies cannot be properly locked unless rightly placed. The tongues 7 of the ends 4 might be offset slightly, and the slots 10 similarly placed. In both constructions, however, without regard to the arrangement of the printed matter on the dummy, the construction of the dummy itself, serves as a guide to insure the proper connection of the same with the background.

It will be apparent from a consideration of the construction, that the dummies may be shipped in the flat, that is, unfolded as shown in Fig. 3. In this form, they may be placed flat upon the support and wrapped together, and a minimum of packing is required. The display device may be assembled by the retailer, no particular skill being required. There is considerable saving in material in the construction of the dummies, since but one large wall is required.

What is claimed as new is:—

1. A display device of the class described, including a support providing a background, a dummy package independent of the support, and means in connection with the dummy and the support for detachably connecting the dummy to the support, said connecting means being operated to connect and detach by relative movement of the dummy and support in the plane of the support.

2. A display device of the class described, including a support providing a background, a dummy package independent of the support, and means in connection with the dummy and the support for detachably connecting the dummy to the support, the dummy having tongues and the support slots for receiving the tongues, certain of the tongues having undercut lower edges to provide a locking connection operable by sliding movement of the dummy as a whole in the plane of the support.

3. A display device of the class described, including a support providing a background, dummy packages each independent of the support, and means in connection with each dummy and the support for detachably connecting the dummy to the support, each dummy being formed from a blank including a front having side and end folds to provide side and end walls when bent at substantially right angles to the body, the side and end walls having tongues, and the support having slots for receiving the tongues, certain of the tongues having undercut lower edges to provide a locking connection operated by the sliding movement of the dummy in the plane of the support.

4. The combination with a flat upright support of one or more dummies of rectangular box form with open back having on rear edges of their side walls projecting lugs with undercuts in their lower edges, and lugs on rear edges of their top and bottom walls, the support having slots to receive the various lugs of each dummy, which is secured in position by downward sliding movement against the face of the support.

5. The combination with a flat upright support of one or more dummies of rectangular box form with open back having on rear edges of their side walls projecting lugs with

undercuts in their lower edges, and lugs on rear edges of their top and bottom walls, the support having slots to receive the various lugs of each dummy, which is secured in position by downward sliding movement against the face of the support, the lug on the top wall and the lug on the bottom wall of a dummy being of different widths, and corresponding slots in the support being of correspondingly different widths whereby to compel the location of the dummy in right-side up position on the support.

Signed at New York city, in the county of New York and State of New York this 26th day of November, A. D. 1928.

FERDINAND MALLGRAF.