No. 746,884. PATENTED DEC. 15, 1903.

A. SHARP.

VALVE.

APPLICATION FILED APR. 12, 1902.

NO MODEL.

FIG. 1.

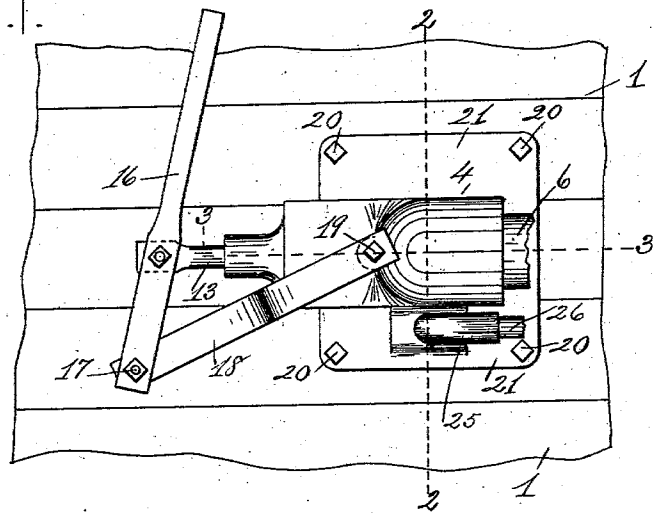

FIG. 2.

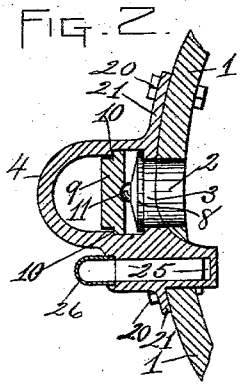

FIG. 6.

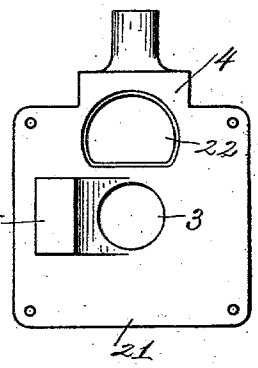

FIG. 3.

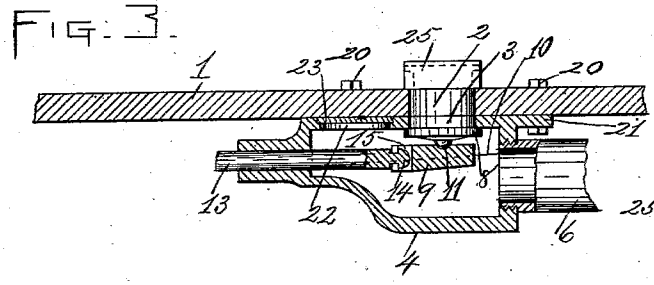

FIG. 4

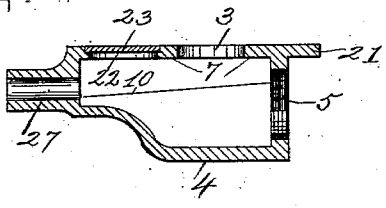

FIG. 5.

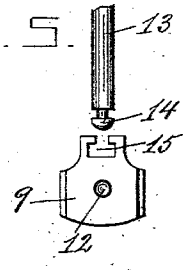

WITNESSES

Wm. S. Greer.

E. M. O'Reilly.

INVENTOR

Alonzo Sharp.

By Mosher & Curtis

Attys.

THE NORRIS PETERS CO., PHOTO-LITHO., WASHINGTON, D. C.

No. 746,884. Patented December 15, 1903.

UNITED STATES PATENT OFFICE.

ALONZO SHARP, OF TROY, NEW YORK, ASSIGNOR TO ADAMS LAUNDRY MACHINE COMPANY, OF TROY, NEW YORK, A CORPORATION.

VALVE.

SPECIFICATION forming part of Letters Patent No. 746,884, dated December 15, 1903.

Application filed April 12, 1902. Serial No. 102,511. (No model.)

To all whom it may concern:

Be it known that I, ALONZO SHARP, a citizen of the United States, residing at Troy, county of Rensselaer, and State of New York, have invented certain new and useful Improvements in Valves, of which the following is a specification.

The invention relates to such improvements; and it consists of the novel construction and combination of parts hereinafter described and subsequently claimed.

Reference may be had to the accompanying drawings, and the reference characters marked thereon, which form a part of this specification.

Similar characters refer to similar parts in the several figures.

Figure 1 of the drawings is a bottom plan view of a portion of the outer cylinder of a cylinder washing-machine, showing the improved valve applied thereto. Fig. 2 is a cross-section of the same, taken on the broken line 2 2 in Fig. 1. Fig. 3 is a central vertical longitudinal section of the same, taken on the broken line 3 3 in Fig. 1. Fig. 4 is a central vertical longitudinal section of the valve-case detached. Fig. 5 is a view in front elevation of the inner end of the valve-stem and the gate-operating wedge-block in juxtaposition to each other. Fig. 6 is a plan view of the wall-engaging side of the valve-case.

The object of the invention is to provide a simple, cheap, and efficient valve adapted for use with cylinder washing-machines as well as for other uses.

The valve is shown in connection with a wall 1, which may be a portion of the outer cylinder of a cylinder washing-machine or the wall of any other reservoir in connection with which it is desired to use the valve. This reservoir-wall is provided with an aperture 2, adapted to register with a similar aperture 3 in the side of the valve-case 4, forming one of the valve-ports, the other valve-port 5 being formed in one end of the valve-case and connected with the pipe 6, which may serve as an inlet or outlet pipe. The port 3 is surrounded by a valve-seat 7, formed on the inner side of the valve-case and adapted to be engaged by the valve-disk 8 when seated to close the port 3.

The valve-disk 8 is moved into and out of line with its seat, as well as toward and from its seat, by the wedge-block 9, movable along the inclined ways 10, formed on the interior of the valve-case.

A rounded boss 11 on the back of the disk or gate fits into a similarly-shaped recess 12 in the face of the wedge-block, whereby the wedge-block and gate are connected to move in unison with each other, while permitting a rocking movement of the gate upon the block such as not to interfere with the proper seating of the gate.

The wedge-block 9 is moved along the inclined ways 10 to operate the gate by means of the valve-stem 13, adapted to reciprocate through a bearing-aperture in the end of the case and provided on its inner end with a T-shaped head 14, located in a transverse T-shaped slot 15, formed in the end of the wedge-block, whereby said stem and block are detachably interlocked and operatively connected.

The valve-stem may be operated in any known manner, as by a lever 16, fulcrumed at 17 upon the link 18, pivoted at 19 upon the valve-case.

The valve-case is adapted to be secured to the reservoir-wall, with its side containing the port 3 in engagement therewith, as by means of the bolts 20, inserted through the flange 21 on the case. The valve-case is also provided in its side so applied to the supporting-wall with an aperture 22, closed by a cover 23, adapted to be securely clamped in position between the valve-case and the wall 1 when the case is bolted to the wall.

The aperture 22 is laterally elongated to dimensions sufficient to permit the insertion therethrough of the wedge-block 9 and gate 8.

In setting up the valve the stem 13 is withdrawn until its T-head 14 is opposite the aperture 22, and the wedge-block 9 is then inserted through the aperture 22 and interlocked with said stem. By withdrawing the stem and wedge-block to the extreme end of the case the gate 8 can be inserted through

the aperture 22 and detachably connected with the wedge-block by inserting its boss 11 in the recess 12 in the block. The parts can then be operated in the manner above described, the aperture 22 being securely closed by the cover-plate 23, as above described. The cover-plate 23 may be further secured by cementing the same to the valve-case, if desired.

The valve above described is particularly adapted for controlling the admission and discharge of water or washing liquid to a cylinder washing-machine, being particularly adapted for such use by reason of its simplicity of construction and operation and by the location of its gate-controlled port in close proximity to the communicating aperture in the reservoir-wall.

The valve-case is shown provided with a by-passage-way 25, adapted to be connected with a steam-supply pipe 26, for the admission of steam to the cylinder of the washing-machine.

The cover-plate 23 may be omitted, if desired, the wall 1 serving to cover and close the aperture 22 when the case is bolted thereto.

The construction above described permits the valve-case, provided with its ports and stem-aperture 27, to be made of a single integral casting.

What I claim as new, and desire to secure by Letters Patent, is—

1. The combination with an apertured reservoir-wall; of a valve-case secured to said wall and provided with a port communicating with the wall-aperture, and having a wall-engaging face provided with an aperture adapted to be covered by said wall; valve-closing mechanism insertible through said wall-closed aperture, and means for operating said valve-closing mechanism, substantially as described.

2. The combination with an apertured reservoir-wall; of a valve-case secured to said wall and provided with a port communicating with said wall-aperture, and in its wall-engaging face with an aperture adapted to be covered by said wall; inclined ways on the inner side of the valve-case; a valve-gate and gate-operating wedge-block adapted to travel along said inclined ways and insertible and removable through the wall-closed aperture in the valve-case, substantially as described.

3. The combination with a supporting-wall; of a valve-case secured thereto and provided with ports and in its wall-engaging face with an aperture adapted to receive internal parts of the valve mechanism; a cover-plate secured between said case and wall in position to close said aperture; and valve-closing mechanism, substantially as described.

4. The combination with a valve-case comprising an integral casting provided with ports, a stem-aperture, and an opening for the admission of internal parts of the valve mechanism; of means for closing said opening; valve-closing mechanism insertible through said opening; and a valve-stem inserted through said stem-aperture and detachably interlocked with said valve-closing mechanism, substantially as described.

5. The combination with a valve-case comprising an integral casting provided with ports, a stem-aperture, and an opening for the admission of internal parts of the valve mechanism; of a gate insertible through said opening; a gate-operating wedge-block insertible through said opening and having a transverse T-shaped slot; a valve-stem inserted through said stem-aperture and having a T-shaped end detachably interlocked with the slotted portion of said wedge-block; and a guide for said wedge-block within the case, substantially as described.

6. The combination with an apertured reservoir-wall; of a valve-case secured to said wall provided with a valved passage-way communicating with a wall-aperture and also with a passage-way through the case separate from said valved passage-way communicating with a wall-aperture, and means for connecting supply-pipes with the case in communication with said passage-ways respectively, substantially as described.

In testimony whereof I have hereunto set my hand this 10th day of April, 1902.

ALONZO SHARP.

Witnesses:
FRANK C. CURTIS,
E. M. O'REILLY.