S. G. HERRMANN.

BINDING AND SUSPENDING DEVICE.

APPLICATION FILED APR. 29, 1914.

1,157,107.

Patented Oct. 19, 1915

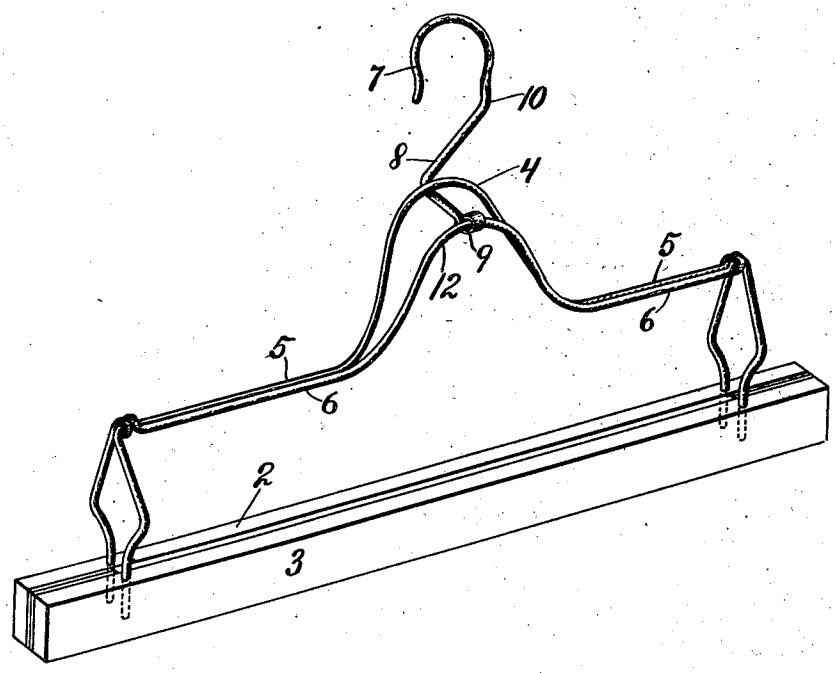

WITNESSES:

Louise Enderle.

Aug. P. Jurgensen

INVENTOR

Samuel G. Herrmann

BY

Thompson & Hill.

ATTORNEY

UNITED STATES PATENT OFFICE.

SAMUEL G. HERRMANN, OF NEW YORK, N. Y.

BINDING AND SUSPENDING DEVICE.

1,157,107. Specification of Letters Patent. Patented Oct. 19, 1915.

Application filed April 29, 1914. Serial No. 835,255.

To all whom it may concern:

Be it known that I, SAMUEL G. HERRMANN, a citizen of the United States, residing at the city of New York, in the county of Bronx and State of New York, have invented certain new and useful Improvements in Binding and Suspending Devices, of which the following is a specification, reference being had therein to the accompanying drawing.

My invention relates to improvements in combination suspending and binding devices and is illustrated in perspective in the accompanying drawing in its application to a trouser hanger.

In said drawing, 2—3 indicates the usual pieces of wood or other suitable material.

5—6 are the usual wire members preferably fastened in the wooden bars 2—3 in any suitable manner as shown, and suitably hinged together by being twisted upon each other as shown, so that when the tops 4—12 are drawn together the pieces of wood are also drawn tightly together; thus binding the trousers in the usual manner.

For the purpose of drawing the wire members together, I prefer to employ a suspending and binding device comprising a hook portion 7 and angular portion 8 as shown, one end of the angular portion preferably being adapted to encircle the top of one of the wire members as indicated at 9 and the other portion projecting upwardly forming the neck of the hook as indicated at 10. When the device is to be used, the binding hook device is dropped down clear of the wire top 4 until the ends of the trousers are inserted in the usual manner. It is then drawn upwardly in the position shown in the drawing; thus binding the two wire members at the top and binding the trousers at the bottom. Thus it will be seen that the hook serves the dual function of binder and hanger and is held seated in the proper position by the weight of the trousers.

Of course it will be understood that this combination binder and hanger is capable of use other than in its application to a trouser hanger although illustrated for that purpose, and in fact various modifications may be made without departing from the spirit of the invention as claimed.

I claim:

A hanger comprising a pair of jaws separated at the top, one of said jaws twisted upon the other between the top and bottom forming a bearing, substantially rigid binding means adapted to draw said separated tops of said jaws in the direction of each other and bring the bottoms of said jaws upon the article to be suspended thereby, and said binding means pivotally secured upon one of said jaws.

In testimony whereof I hereunto affix my signature in the presence of two witnesses.

SAMUEL G. HERRMANN.

Witnesses:

LOUISE ENDERLE,

THOMAS A. HILL.