April 15, 1958 H. WARNER 2,831,181

RESPIRATION MONITORING DEVICE

Filed Jan. 27, 1956

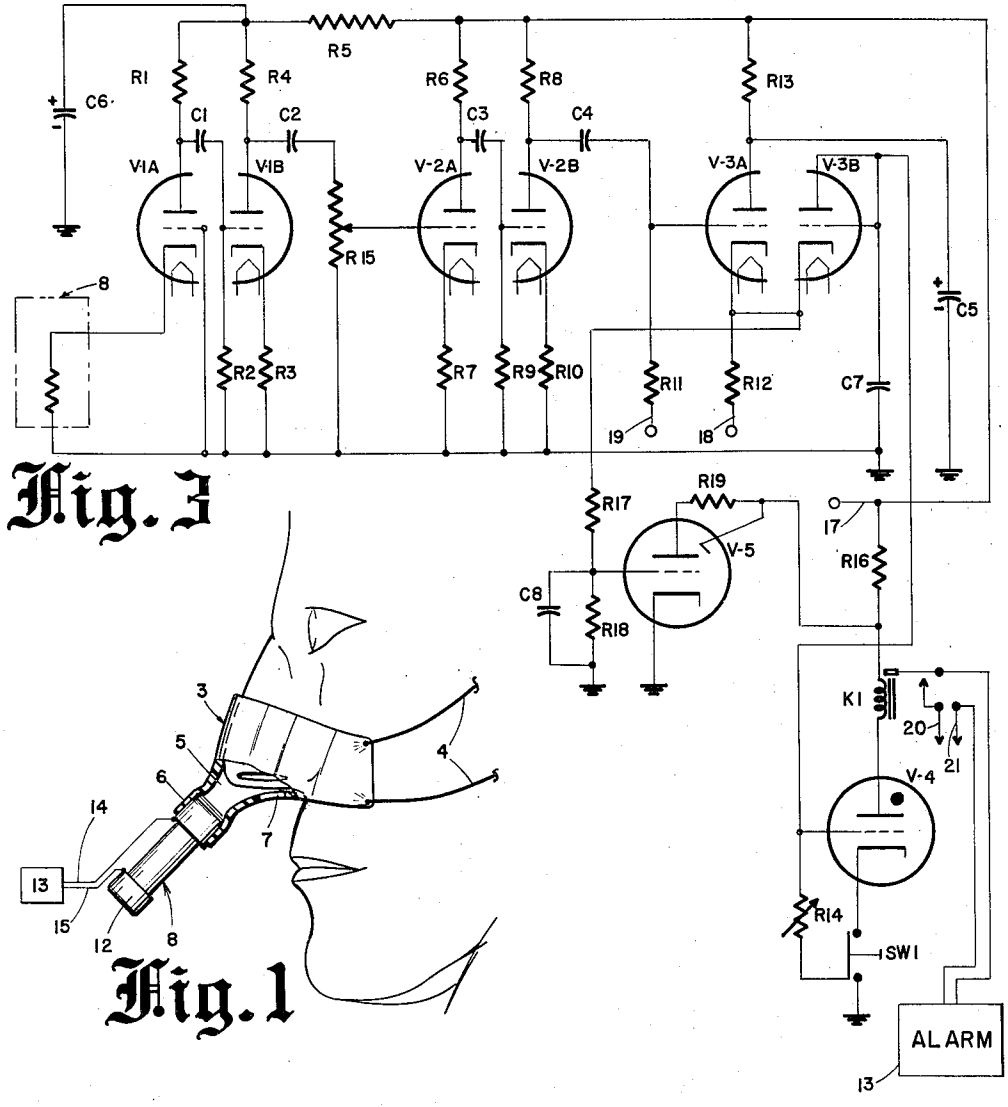

Fig. 3

Fig. 1

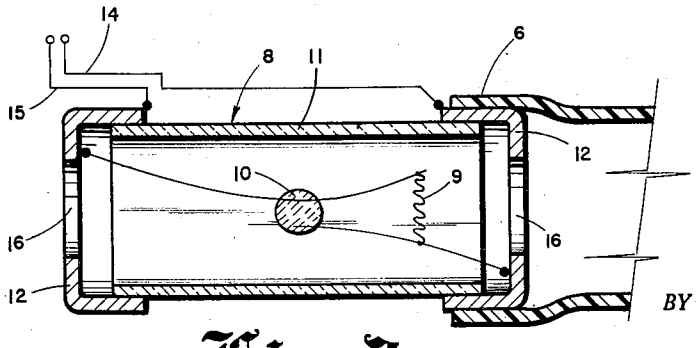

Fig. 2

INVENTOR.
Harold Warner

BY

Attorney

United States Patent Office 2,831,181
Patented Apr. 15, 1958

2,831,181

RESPIRATION MONITORING DEVICE

Harold Warner, Holmes, Pa.

Application January 27, 1956, Serial No. 561,808
8 Claims. (Cl. 340—213)

The present invention relates to novel and improved electronic detection apparatus and more particularly to novel and improved electronic detection apparatus for use in providing ample warning of an appreciable change of rate, or cessation, of the respiratory process of a human being or other living pulmonary organism.

In the care and treatment of incubator or normal infants and other patients likely to suffer respiratory anomalies, it often becomes necessary and desirable to monitor with care the respiratory action of the patient and to provide a prompt and reliable warning or alarm when the respiration cycle falters. In the past, this vigilance has ordinarily been maintained by the nursing staffs of the hospitals or other available attendants, who periodically observe and inspect the condition of the patient in accordance with a predetermined schedule. It has been found, however, that on occasion respiratory difficulties, such as aspiration of the contents of the stomach, a mucous bronchial occlusion, or some other complication, develop immediately or shortly after such a check or inspection. Remedial measures taken after discovery of the same during the next period of inspection are often too late to effect resuscitation of the patient.

Accordingly, it is a principal object of the present invention to provide a novel and improved respiration monitoring device which provides an automatic and prompt warning or alarm when an appreciable change of rate, or the cessation of respiration of the patient occurs.

It is a further object of the present invention to provide novel and improved respiration detection apparatus which is reliable and effective in operation and yet relatively simple and economical in construction.

Other objects and advantages of the subject invention will become more readily apparent from the following description:

In the drawing which is illustrative of the invention:

Figure I is a side elevational view of a preferred embodiment of the present invention, showing a preferred manner in which the same is positioned adjacent to the nasal passages of the patient's face.

Figure II is a detailed view of the sensing element shown in Figure I.

Figure III is a preferred schematic diagram of the electrical circuits of the invention shown in Figure I.

A preferred embodiment of the invention is illustrated in Figures I–III of the drawings. As shown in Figure I, the mask assembly or the like 3 is preferably secured to the infant's or patient's face by suitable conventional straps or the like 4 and includes the plastic nosepiece element 5, which preferably encloses the lower extremity of the nose, and the tubular cylindrical portion 6, which extends downward from the nasal passages of the patient's nose. The opening 7 in the mask assembly adjacent to the bottom of the nosepiece provides a bypass air passage and insures free and unrestricted breathing of the patient.

The sensing element or the like 8, which forms an important part of the present invention, is securely positioned within the tubular extremity 6 of the mask assembly in any suitable manner and electrically connected to amplifier integrator alarm chassis 13 through conductors 14 and 15.

Referring now to Figure II, the sensing element preferably includes the thermally sensitive filament 9, which is mounted on a suitable insulated support 10 within the glass tube 11 and the metallic end caps 12 at opposite extremities of the tube 11. The terminals of the filament 9 are electrically coupled to their respective end caps 12 and thence to the amplifier integrator and alarm chassis. The apertures 16 in the end caps 12 provide a continuous air passage past the filament between the interior of the mask assembly 3 and the atmosphere.

The details of a preferred embodiment of the amplifier integrator and alarm circuits of the present invention are illustrated in Figure III of the drawing. As shown therein, the sensing element 8 is preferably connected in the cathode circuit of tube V–1A. The plate circuit of tube V–1A extends from the positive 120 volt supply line 17 through the decoupling resistor R5, the load resistor R1, the tube V–1A, and the sensing element 8 to ground. The control grid of tube V–1A is preferably tied to ground. The plate of tube V–1A is coupled to the control grid of tube V–1B through condenser C1 and resistor R2. The plate circuit of tube V–1B extends from the positive 120 volt supply line 17 through resistors R5 and R4, the tube V–1B, and resistor R3 to ground. Decoupling condenser C6 is preferably connected as shown between the junction of resistors R4 and R5 and ground. The plate of tube V–1B is coupled to the control grid of tube V–2A through condenser C2 and potentiometer R15. The plate circuit of tube V–2A extends from the positive 120 volt supply line 17 through resistor R6, the tube V–2A, and resistor R7 to ground. The plate of tube V–2A is coupled to the control grid of tube V–2B through condenser C3 and resistor R9. The plate circuit of tube V–2B extends from the positive 120 volt supply line 17 through resistor R8, the tube V–2B, and resistor R10 to ground. The plate of tube V–2B is coupled to the control grid of tube V–3A through condenser C4 and resistor R11. Tube V–3A is a cathode follower whose plate circuit extends from the 120 volt supply line 17 through resistor R13, the tube V–3A, and resistor R12 to the negative 70 volt supply line 18. Resistor R11 is preferably returned to the negative 4 volt supply line 19. Decoupling condenser C5 is connected from the plate of tube V–3A to ground. The cathode of tube V–3A is directly connected to the cathode of tube V–3B. The plate and control grid, electrically joined, of the tube V–3B feed condenser C7, which is shunted by potentiometer R14. Condenser C7 and variable resistor R14 comprise a time constant in the control grid circuit of thyratron tube V–4. The plate circuit of tube V–4 extends from the 120 volt supply line 17 through resistor R16, relay coil K1, and switch SW1 to ground. The plate and control grid of tube V–3B are directly connected to the control grid of tube V–4. The normally open contacts of relay K1 are coupled to the 6.3 volt A. C. supply lines 20 and 21 in series with the audible alarm device. The cathode of tube V–3A is coupled through resistor R17, resistor R18, and condenser C8 to the control grid of electron ray eye tube V–5. The plate and target circuit of tube V–5 extends from the 120 volt supply line 17 through resistor R16, resistor R19 and the tube V–5 to ground.

In operation, the sensing element 8 is heated by the quiescent current of tube V–1A to a value somewhat above ambient temperature. Respiratory or tidal air moving past this heated filament 9 displaces the heated layers of still air, thereby lowering the thermal impedance. This

causes a rapid cooling of the filament 9, thereby sharply lowering its resistance. Since the value of resistance in the cathode circuit of tube V–1A determines the amount of plate current flow, this varying resistance as a function of transient respiratory air movement manifests itself in a varying or A. C. plate voltage impressed across resistor R1. This voltage is applied to the control grid of tube V–1B through condenser C1. The signal is then amplified by the circuits of tubes V–1B, V–2A, and V–2B until the small value of signal existing in the cathode circuit of tube V–1A is increased to a value sufficient to drive cathode follower tube V–3A. The signal voltage developed across plate load resistor R8 is impressed through condenser C4 and across resistor R11 on to the grid of tube V–3A. The cathode circuit of tube V–3A returns to a negative 70 volt D. C. supply line 18 to permit signal voltage at the cathode of tube V–3A to drop below ground. Similarly, the control grid circuit of tube V–3A is returned to a negative 4-volt D. C. supply line 19 to fix the quiescent voltage at the cathode to zero. Tracing through this circuit then, a negative going signal at the control grid of tube V–3A causes a negative going signal at low impedance at the cathode of tube V–3A. This signal charges capacitor C7 negatively through diode tube V–3B. This negative voltage existing across condenser C7 maintains a cut-off bias on the control grid of thyratron tube V–4. Variable resistor R14 acts to control the rate of discharge of condenser C7, and therefore determines the length of time thyratron tube V–4 is held cut-off following the last respiratory effort. It can be seen, then, that if respiration fails, the bias voltage maintained across condenser C7 is discharged within a predetermined time as set by variable resistor R14, and the thyratron tube V–4 fires, actuating relay K1 and energizing the alarm circuit. Electron ray eye tube V–5 is included in conventional circuitry, driven also from the cathode of tube V–3A. The purpose of this tube V–5 is to enable hospital personnel to visually monitor respiration rate. Condenser C6 and resistor R5, and condenser C5 and resistor R13, are decoupling networks to prevent regenerative feedback.

While preferred embodiments of the invention have been disclosed, the description is intended to be illustrative only and it is to be understood that changes and variations may be made without departing from the spirit and scope of the invention as defined by the appended claims.

I claim:

1. Apparatus for sensing and detecting variations in the respiratory function of a patient, comprising an electrical resistive element sensitive to respiratory tidal air; means for positioning the said element in the path of the respiratory tidal air of the patient; an electrical circuit which includes an electrical energy source for the element, and the sensitive element itself; means for amplifying changes of the AC component in the flow of current through the sensitive element to a value sufficient to charge a capacitor from a low impedance source to a value negative enough to act as a cutoff bias on an alarm circuit, which is energized when the AC component of the flow of current through the aforesaid sensitive element changes or reduces to zero.

2. In electronic apparatus for sensing and detecting changes in the respiratory function of a patient; a thermally sensitive resistive device comprising a tubular glass envelope; a thermally sensitive wire mounted within the envelope; electrically conductive end caps mounted upon opposite extremities of the envelope, each of the said end caps having an aperture disposed therein which together with the interior of the envelope provide a continuous axial air passage through the device; and means for electrically connecting the end caps to opposite extremities of the thermally sensitive wire.

3. Apparatus for detecting a change in the respiratory action of a pulmonary organism, said apparatus comprising an element sensitive to thermal variations of its surrounding atmosphere; means for positioning the element in the path of the respiratory tidal air of the organism; and means for detecting the effect of thermal changes on the said element.

4. Apparatus for detecting a change in the respiratory action of a pulmonary organism, said apparatus comprising an element sensitive to thermal variations of its surrounding atmosphere; means for positioning the element in the path of the respiratory tidal air of the organism; and means for detecting the effect of thermal changes on the said element; and an alarm device which is coupled to the detecting means and which becomes energized when a predetermined thermal change in the element's surrounding atmosphere occurs, said thermal change caused by displacement of atmosphere proximal to the element by the respiratory tidal air.

5. Apparatus for detecting a change in the respiratory action of a pulmonary organism, said apparatus comprising a thermally sensitive element; means causing the temperature of the element to differ from the ambient temperature; means for positioning the element in the path of the respiratory tidal air of the organism; and means to detect the effect of variations of the temperature of the element.

6. Apparatus for detecting a change in the respiratory action of a pulmonary organism, said apparatus comprising a thermally sensitive element; means to elevate the temperature of the element above the ambient temperature; means for positioning the element in the path of the respiratory tidal air of the organism; means for detecting the effect of temperature variations of the element; and an alarm device which is coupled to the detecting means and which becomes energized when the said temperature variations of the element vary from a predetermined magnitude.

7. Apparatus for detecting a change in the respiratory action of a pulmonary organism, said apparatus comprising a thermally sensitive electrical impedance element; a source of electrical energy; an electrical circuit which includes in series the energy source and the impedance element; means for positioning the impedance element in the path of the respiratory tidal air of the organism; means for detecting variations in the impedance of the impedance element; and an alarm device which is coupled to the detecting means and which becomes energized when the impedance variations of the impedance element vary from a predetermined value.

8. Apparatus for detecting a change in the respiratory action of a pulmonary organism, said apparatus comprising a thermally sensitive electrical resistor; a source of electrical energy; an electron tube having an anode, a cathode, and a control grid; means connecting the source, the tube and the resistor in electrical series; means for positioning the resistor in the path of the respiratory tidal air of the organism; means for detecting variations in the flow of current through the tube; and an alarm device which is coupled to the detecting means and which becomes energized when the variations in the tube current vary from a predetermined amount.

References Cited in the file of this patent

UNITED STATES PATENTS

2,193,945	Strauss et al.	Mar. 19, 1940
2,435,181	Lindsay	Jan. 27, 1948
2,473,922	Tobias	June 21, 1949