Aug. 17, 1926. 1,596,461

H. N. SCHOFIELD

RADIATOR CAP

Filed Jan. 20, 1926

Fig. 1.

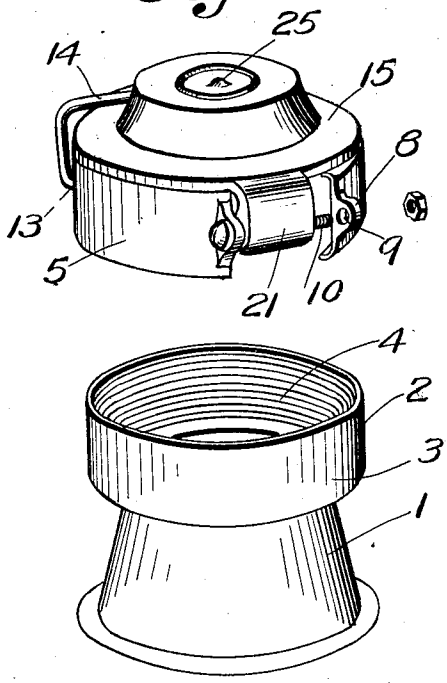

Fig. 2.

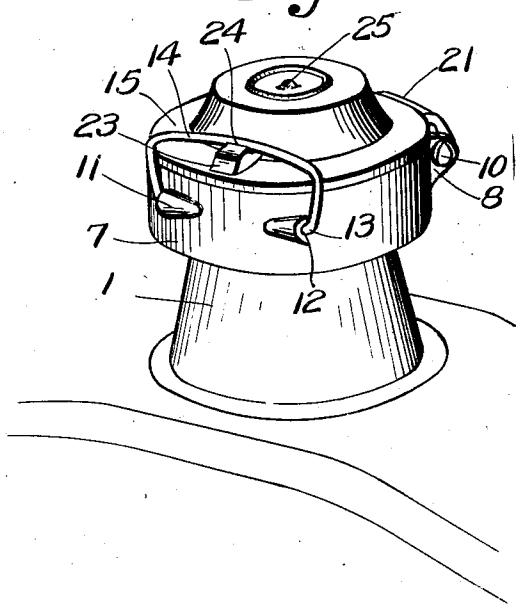

Fig. 3.

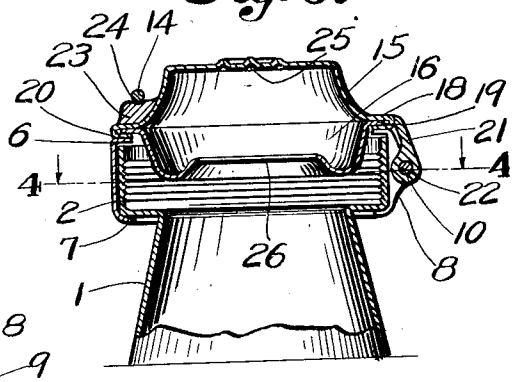

Fig. 4

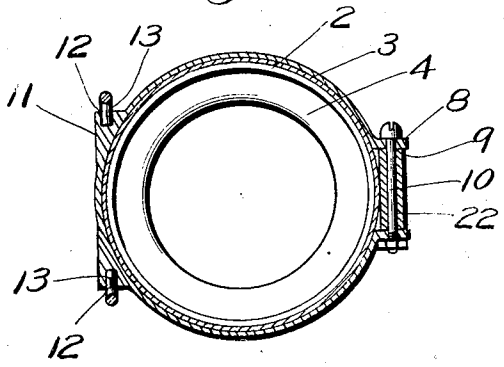

INVENTOR

Henry N. Schofield

BY

Arthur C. Brown

ATTORNEY

Patented Aug. 17, 1926. 1,596,461

UNITED STATES PATENT OFFICE.

HENRY N. SCHOFIELD, OF KANSAS CITY, MISSOURI.

RADIATOR CAP.

Application filed January 20, 1926. Serial No. 82,450.

My invention relates to radiator caps and more particularly to one of the hinge type whereby easy, quick access may be afforded to the radiator of the motor vehicle upon which the cap is used, the principal object of the present invention being to provide an inexpensive but sightly cap of this kind for use on moderately priced cars.

In accomplishing the object of my invention I have provided improved details of structure, the preferred forms of which are illustrated in the accompanying drawings wherein:—

Fig. 1 is a perspective view of a radiator cap embodying my improvements, illustrated in spaced relation to the neck of the radiator to which the cap may be applied.

Fig. 2 is a detail perspective view of the cap applied to the neck.

Fig. 3 is a central, vertical section of the cap and neck.

Fig. 4 is a horizontal section on the line 4—4, Fig. 3.

Referring more in detail to the drawings, 1 designates a radiator neck of a type used on a well known make of automobile and which tapers inwardly toward the top and is there expanded to form a collar 2 having a downwardly facing exterior shoulder 3 forming an interior seat 4, the collar being interiorly threaded to receive a standard cap (not shown).

My improved cap is adapted to be substituted for the standard cap furnished with the car, and comprises a ring 5 stamped from sheet metal, having edge flanges 6 and 7 adapted to lie over the edges of the collar 2 of the radiator neck and having ears 8 on its outer face, adjacent its ends, provided with apertures 9 for receiving a bolt 10 whereby the ends of the collar may be drawn together to attach it to the collar of the radiator neck, the ears 8 being preferably of thicker metal than the collar and soldered or otherwise permanently secured thereto.

Also soldered or otherwise permanently secured to the ring 5 diametrically opposite the ears 8 are bosses 11 having outwardly opening sockets 12 for receiving the end shanks 13 of a bail 14 which is adapted to extend upwardly over the ring to engage with a cover member of the cap.

The cover member is formed from two pieces of sheet metal stamped to form an upstanding lid 15 and a downstanding cup 16, each having an annular edge flange 18 or 19, one overlying the other and one, here shown as the flange 18, having a lip 20 turned over the flange 19 of the cup 16 to lock the members together.

Soldered or otherwise permanently secured to the cover member is a hinge arm 21 adapted to lie between the ears 8 of the ring 5 and having an aperture 22 through which the hinge bolt 10 is projected, and soldered or otherwise permanently secured to the cover member 15. Diametrically opposite the hinge arm 21 is a lug 23 having a notch 24 in its upper face for receiving the bail 14, the bail being dimensioned to spring into the notch and hold the cover member firmly on the ring to prevent rattling. The cover member is preferably solid, but is stamped on its top to enhance the appearance of the cap and also to provide a centering socket 25 for a drill when an opening is to be made in the cap for attachment of a motor meter.

The cup 16 is provided with a central opening 26 concentric with the socket 25 to accommodate the stem of the motor meter when one is used on the cap.

It is apparent that a cap constructed as described may be easily and quickly applied to a radiator neck of the type illustrated, and that when so applied, may afford the same ready access to the radiator for filling purposes as similar caps of more expensive construction in quite general use on cars of other makes.

What I claim and desire to secure by Letters-Patent is:—

In a radiator cap, a ring member adapted for application to a radiator neck, a cover member pivotally mounted on the ring member and comprising separate pieces of sheet metal stamped to form an outstanding lid and a downset cup, each having an outstanding edge flange, the edge of the cover flange turned over the edge of the cup flange to hold the parts together, a hinge arm connected with the cover and pivotally mounted on the ring, a bail lug attached to the cover opposite the hinge arm, bosses on the ring and a bail pivotally mounted in the bosses and engageable with the cover lug to anchor the parts together.

In testimony whereof I affix my signature.

HENRY N. SCHOFIELD.