United States Patent

[11] 3,576,214

[72] Inventor **John M. Ratcliffe**
51 Moiyas Road, Wayne, N.J.

[21] Appl. No. **841,934**
[22] Filed **July 15, 1969**
[45] Patented **Apr. 27, 1971**

[54] **COLLAPSIBLE TRAIL LEVELER**
9 Claims, 9 Drawing Figs.

[52] **U.S. Cl.** **172/393,** 172/787, 280/20, 37/41
[51] **Int. Cl.** **E02f 3/12,** B62b 13/16, E01h 5/00
[50] **Field of Search** 172/393, 787, 781; 280/20; 37/50, 51, 41

[56] **References Cited**

UNITED STATES PATENTS

1,300,095	4/1919	Aldrich	280/20
1,784,691	12/1930	Ingalls	172/393
3,276,153	10/1966	Sorensen	172/393X

Primary Examiner—Robert E. Pulfrey
Assistant Examiner—Stephen C. Pellegrino
Attorney—James J. Cannon

ABSTRACT: A trailer-type snowmobile trail-smoothening device is described, including a pair of coextensive, elongated runners held in spaced, parallel relation by a plurality of pivotally journaled scraper mechanisms having vertically adjustable scraper blades. The scraper mechanisms, together with the runners, constitute a parallel guide mechanism permitting longitudinal collapsing of the runners into substantially abutting relation. The runners are of channel shape with opposed recesses defining a chamber for the reception of portions of the scraper mechanisms when the runners are in collapsed condition; and the runners are so hingedly jointed along their lengths, and so provided with appropriate separable joints, as to permit folding of the collapsed runners into stacked runner sections for easy transport and storage when the device is not in use.

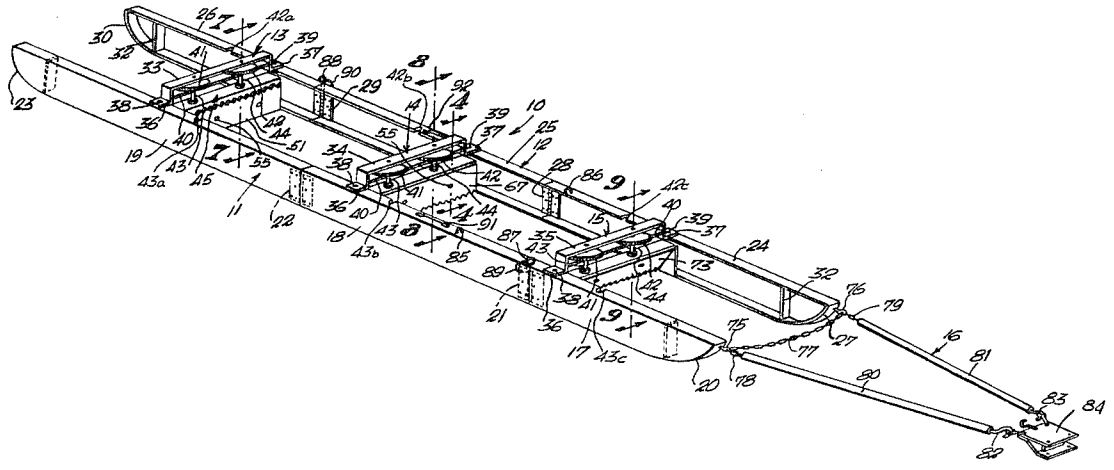

PATENTED APR 27 1971

3,576,214

SHEET 1 OF 2

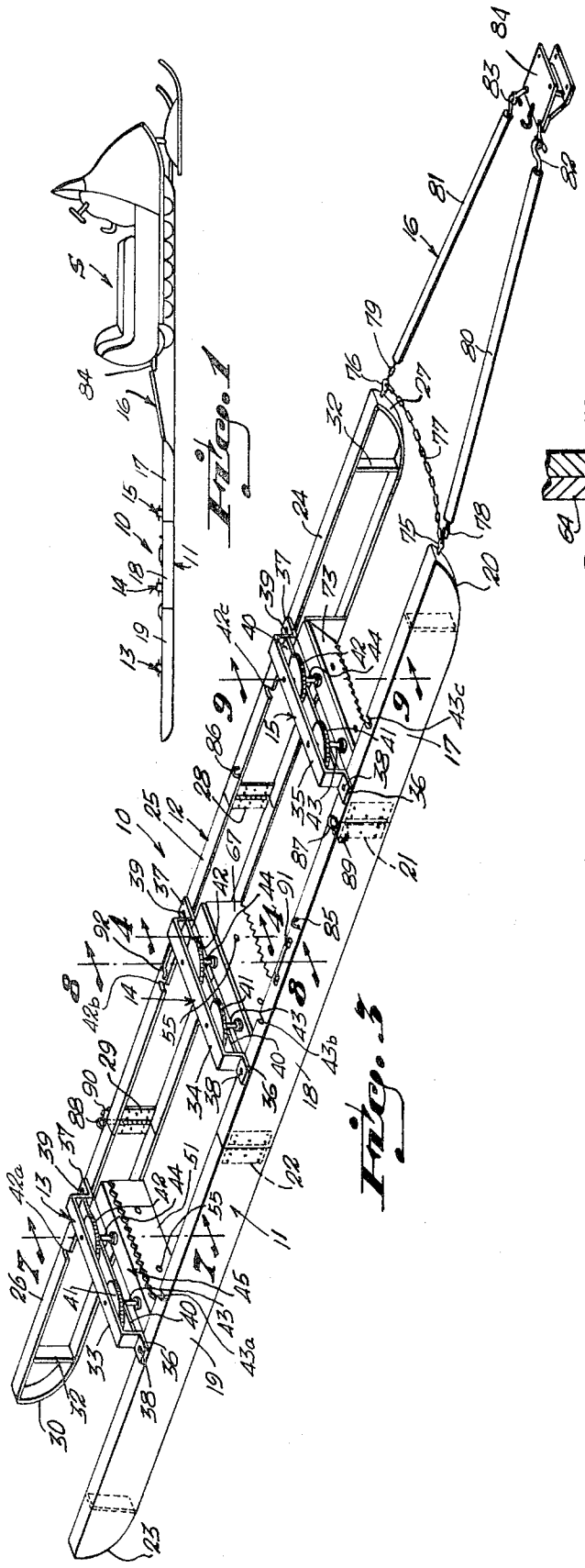

Fig. 1

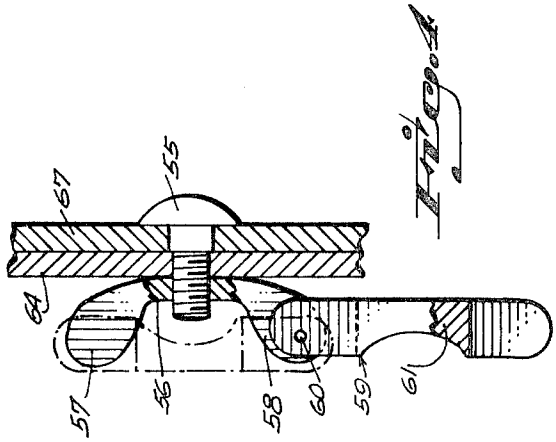

Fig. 4

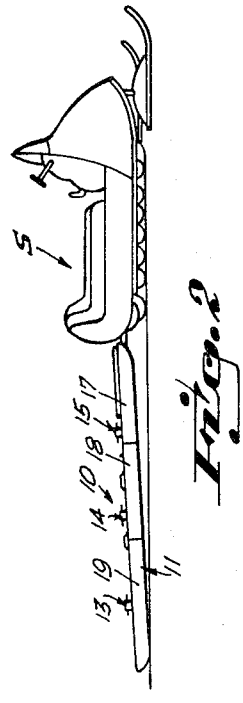

Fig. 2

INVENTOR.
JOHN M. RATCLIFFE
BY James J. Cannon
ATTORNEY.

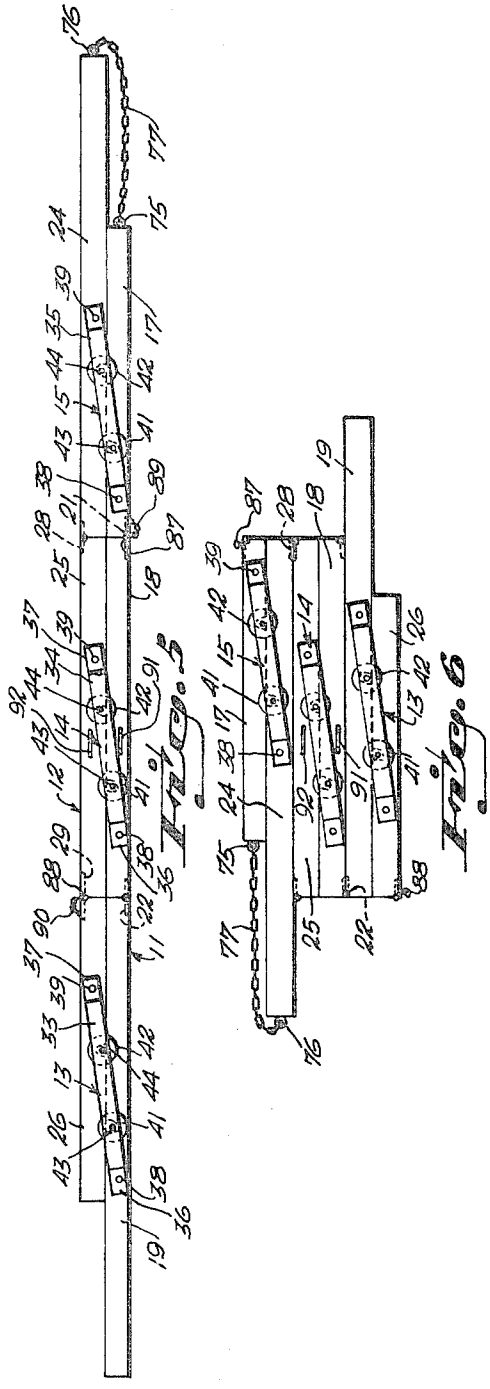

Fig. 5

Fig. 6

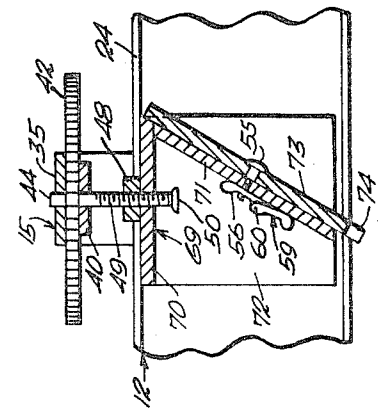

Fig. 9

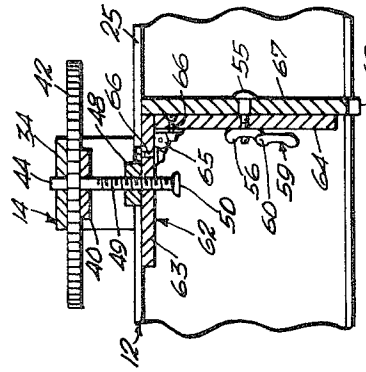

Fig. 8

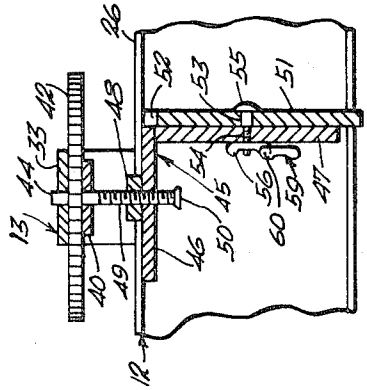

Fig. 7

INVENTOR.
JOHN M. RATCLIFFE
BY James J. Cannon.
ATTORNEY.

COLLAPSIBLE TRAIL LEVELER

This invention relates to equipment for leveling and smoothening trails used by snowmobiles and is directed particularly to an improved trail leveler adapted, in use, to be towed behind a snowmobile or the like towing vehicle for initially grading and smoothening the trail, and which, at the same time can be foldingly collapsed into a compact package for easy portability and storage when not in use.

The principal object of my invention is to provide a trail leveler of the above nature comprising a pair of coextensive elongated runners maintained in spaced parallel relation by a plurality of blade mount mechanisms bridging said runners and arranged in spaced relation along their lengths, each blade mount mechanism comprising a vertically adjustable scraper blade.

Another object of my invention is to provide a trail leveler of the character described wherein the blade-mounting mechanisms have their interconnecting ends pivotally journaled to the runners to permit parallel, swinging movement of the runners into collapsed, substantially face-to-face position, and wherein the runners are so jointed along their lengths as to permit folding into a plurality of stacked sections after collapse of the runners.

Yet another object of my invention is to provide a trail leveler of the above nature wherein the jointed runners are fabricated of channel-shaped members, the channel openings of each runner being opposed to the channel openings of the other runner, and wherein portions of the blade mount mechanism between the runner channel openings are of such size and shape as to be fully received within and contained by the chamber defined by the runners when in collapsed condition.

Yet another object of my invention is to provide a collapsible trail leveler of the character described wherein the blade mount mechanisms each comprise a removable and reversible scraper blade having opposed, selectively usable straight and serrated edges including wingnut attachment means having a weighted extension portion operative to prevent self-loosening due to vibration and the like upon use of the trail leveler.

Still another object of the invention is to provide a trail leveler of the character described which will be simple in construction, inexpensive to manufacture, light in weight, readily adjustable as to scraper blade mounting and positioning, which can readily be collapsed and folded for transport and storage, and which will be dependable, durable and effective in operation.

Other objects, features and advantages of the invention will be apparent from the following description when read with reference to the accompanying drawings. In the drawings, wherein like reference numerals denote corresponding parts throughout the several views:

FIG. 1 is a side elevational view of a collapsible trail leveler for snowmobiles embodying the invention, shown attached to a snowmobile for use in smoothening a snow trail;

FIG. 2 is a side elevational view as in FIG. 1 but showing the trail leveler in raised position in the front where it attaches to the snowmobile to reduce drag when climbing steep grades;

FIG. 3 is a perspective view of the trail leveler, as seen from above and on an enlarged scale;

FIG. 4 is a vertical cross-sectional view taken along the line 4–4 of FIG. 3 in the direction of the arrows and illustrating mechanical details of one of the weighted wingnut devices used for attaching the scraper blades in place;

FIG. 5 is a top view of the trail leveler shown, in partially collapsed condition;

FIG. 6 is a top view of the trail leveler, shown in fully collapsed condition;

FIG. 7 is a vertical cross-sectional view, taken along the line 7–7 of FIG. 3 in the direction of the arrows and illustrating mechanical details of one of the blade-mounting mechanisms;

FIG. 8 is a vertical cross-sectional view, taken along the line 8–8 of FIG. 3 in the direction of the arrows and illustrating mechanical details of another of the blade-mounting mechanisms; and

FIG. 9 is a vertical cross-sectional view, taken along the line 9–9 of FIG. 3 in the direction of the arrows and illustrating mechanical details of yet another of the blade-mounting mechanisms.

Referring now in detail to the drawings, reference numeral 10 designates, generally, a collapsible trail leveler embodying the invention, the same being shown hitched to a snowmobile S in FIGS. 1 and 2, for use as hereinbelow more particularly described. As illustrated in FIG. 3, the trail leveler 10, when in use condition, comprises a pair of elongated runners 11, 12, held in spaced, parallel relation by rear, central and front scraper mechanisms 13, 14 and is, respectively. A semirigid hitch mechanism 16 extends from the front of the trail leveler for connection with the snowmobile S or other towing vehicle as is hereinafter described.

The elongated runner 11 comprises a front runner section 17, a central runner section 18 and a rear runner section 19, all of which are preferably fabricated of channel iron members of U-shaped cross section. The front runner section 17 is formed with an upwardly curved runner surface portion 20 at its forward end, and is removably connected at its rearward end with the forward end of the central runner section 18 by a separable hinge 21. The rearward end of the central runner section 18 is hingingly connected with the forward end of the rear runner section 19 by hinge 22; and the rearward end of said rear runner section has its runner edge portion upwardly curved, as indicated in 23.

The elongated runner 12 comprises a front runner section 24, somewhat longer than the front runner section 17 of the runner 11, a central runner section 25 of substantially the same length as the central runner section 18 of runner 11, and a rear runner section 26 of somewhat shorter length than that of the rear runner section 19 of runner 11. The forward end of the front runner section 24 is upwardly curved, as indicated in 27, and is hingingly joined at its rearward end with the forward end of the central runner section 25 by hinge 28. A separable hinge 29 joins the rearward end of the central runner section 25 with the forward end of the rear runner section 26. The rearward end of the rear runner section 26 has its runner edge curved upwardly, as indicated at 30. As illustrated in FIG. 3, the front and rear sections of the elongated runners of 11 and 12, are provided with interior vertical reinforcing bars 32 for strengthening purposes.

The rear, central and front scraper mechanisms 13, 14 and 15 comprise rear, central and front upper support brackets 33, 34 and 35 respectively, each of which is of shallow U-shape disposed in invented relation above and between the elongated runners 11 and 12, and each of which is provided with opposed, outwardly extending ears 36 and 37, pivotally attached to opposed portions of the upper rails of their respective rear, central and front runner sections 19, 26; 18, 25, and 17, 24 as by pivot pin pairs 38 and 39.

Each of the support brackets 33, 34 and 35 has welded or otherwise secured in spaced parallel relation within and between the outer ends thereof an intermediate support bar 40, journaling therebetween a pair of spaced blade adjustment wheels 41, 42, fixed on respective axial shafts 43, 44. The peripheral edges of the blade adjustment wheels 41, 42, are preferably knurled to facilitate turning in blade adjustment, as is hereinbelow more particularly described.

The rear scraper mechanism 13 further comprises a blade mount 45 (see FIGS. 3 and 7) comprising a horizontal plate 46 and a vertical depending plate 47, said depending plate being either welded to or integrally cast with said horizontal plate. The upper surface of the vertical plate 46 has welded or otherwise fixed thereupon a pair of spaced bosses 48 which are centrally bored and threaded, along with said plate, to threadingly receive the threaded lower end portions 49 of axial shafts 43, 44 of the associated blade adjustment wheels 41 and 42. As is illustrated in FIG. 7, the lower or outer ends of the threaded shafts 43 and 44 are headed, as indicated at 50, to limit downward adjustment of the associated blade mount.

A flat scraper blade 51, having a serrated edge 52, is removably attached against the forward surface of the vertical plate 47 of the blade mount 45, to which end a pair of bolt openings 53 is provided along said scraper blade for alignment with bolt openings 54 in the vertical plate 47 for the reception therethrough of a pair of bolts 55 secured in place by wingnuts 56. The wingnuts 56 (only one illustrated in FIG. 7) comprise opposed wings 57 and 58, wing 58 of which has swingably attached thereto one end of an elongated wingnut extension portion 59 as by pivot pin 60. The wingnut extension portion 59 is centrally weighted, as indicated at 61, and is adapted to be swung into bridging relation with respect to the opposed wings 57 and 58, as indicated by the broken line representation thereof in FIG. 4, to facilitate tightening of the wingnut. In use, the weighted wingnut extension portion 59 will be allowed to fall to the down position, as illustrated by the full line representation thereof in FIG. 4, to minimize the possibility of self-loosening due to vibration, that is, to maintain the scraper blades securely attached to their respective blade mounts during use of the trail leveler.

The central scraper mechanism 14 has associated therewith a central blade mount 62, (see FIG. 8), comprising a horizontal plate 63 and a vertical plate 64. The vertical plate 64 is yieldingly retained in depending relation with respect to the forward edge of the horizontal plate 63 by means of a plurality (only one illustrated in FIG. 8), of spring-tensioned hinges 65 secured as by bolt 66. The hinges 65 may be of the type commonly used on self-closing screen doors, being equipped with torque springs adjustable as to tension for adjustment, as may be required, with respect to the reactive force supplied by the hinges upon use of the device. The forward surface or face of the vertical plate 64 has removably secured thereto by bolts 55 and wingnuts 66 a flat scraper blade 67 having a downwardly directed, serrated cutting edge 68. It will be understood that, in use, if the surface being scraped by the scraper blade 67 is too hard for scraping, the resiliency afforded by the spring-tensioned hinges 65 permits sufficient backward bending of said scraper blade to allow passage over such areas.

The front scraper mechanism 15 has associated therewith a front blade mount 69 comprising a horizontal plate 70 and an angularly rearwardly extendingly front plate 71, attached to and extending downwardly to the rear from the forward end of said horizontal plate. End support plate 72 welded or otherwise affixed against the opposed ends of the front blade mount 69 enhance the rigidity of the structure. The flat scraper blade 73, having a serrated lower edge 74, is similarly affixed against the front surface of the angular front plate 71 by bolts 55 and wingnuts 56.

The semirigid hitch mechanism 16, as is best illustrated in FIG. 3, comprises a pair of hook eyes 75, 76, secured, respectively, to upper front end portions of the front runner sections 17 and 24, respectively. A central chain extends loosely between the hook eyes 75 and 76. Side chain 78 and 79, extend one each from the hook eyes 75, 76, respectively, and pass through identical lengths of rigid conduit 80 and 81 to terminate at their outer ends in hitch hooks 82 and 83, respectively. The hitch hooks 82 and 83 are adapted to be releasably attached to a pair of hook eyes forming part of the hitch plate or bracket 84 secured to the snowmobile S or other towing vehicle, as illustrated in FIG. 1. As illustrated in FIG. 2, the leveler 10 can be close coupled to a towing vehicle hitch plate or bracket 84 with the forward end elevated by hooking portions of the central chain 77 with respect to the towing vehicles hitch plate. Close-coupled elevated front end towing of the trail leveler is often desirable or necessary to reduce drag when climbing steep grades. When so utilized, the hitch members 80 and 81 will be folded backwardly over the top rails of their respective elongated runners 11 and 12, and secured by hooking into anchor loops 85 and 86 provided for this purpose.

In use of the trail leveler as illustrated in FIG. 1, by way of example being shown towed by a snowmobile S, the successive scraper blades 73, 67 and 51, on their respective front blade mount 69, (being a rigid angled mount of about 30° with respect to the vertical), central blade mount 62, (being a sprung vertical mount) and rear blade mount 45, (being a rigid vertical mount), serve to remove the high points from bumps in the path of travel and use the removed snow to fill in the low spots. As hereinabove described, all of the scraper blades comprise a straight edge along one side and a serrated edge along the other side; and the mounting holes are so symmetrically arranged that either edge may be used merely by turning the blade over and securing it in place. As illustrated in FIGS. 7, 8 and 9, it will be seen that the attachment wingnuts 56, by virtue of their depending weighted extension portions 59, prevent loosening of the blade-mounting bolts 55 during use of the trail leveler. The height of the blade mounts 69, 62 and 45, and the consequent vertical positions of their associated scraper blades will be controlled by their associated pairs of blade adjustment wheels 41 and 42. The degree of adjustment of vertical adjustment afforded by the pairs of blade adjustment wheels 41 and 42, is preferably such as to move the scraping edge of the scraper blades between a position about one-half inch above the level of the runner surfaces and a distance of about three-fourths inch below the runners.

While the trail leveler is illustrated herein with the three different types of blade mounts 45, 62 and 69, as described above, it will be understood that they could alternatively be of uniform construction or utilized in a different sequence from that illustrated, depending upon the condition of the trail being leveled. It is also to be understood that while the trail leveler is illustrated and described herein for use in leveling a snow trail, it is well adapted to be used for scraping and leveling dirt and sand trails.

The semirigid hitch mechanism 16 permits flexibility while towing but at the same time prevents the trail leveler from overrunning the towing vehicle and damaging the vehicles track when going down steep grades.

Referring now to FIGS. 5 and 6, it will be seen how the trail leveler 10 folds into a compact package for storage when not in use. FIG. 5 illustrates the first step in the folding sequence, wherein the elongated runner assembly 11 is pushed backwardly with respect to elongated runner assembly 12 to be folded flat thereagainst. Upon such folding it will be understood that the rear, intermediate and front scraper mechanisms 13, 14 and 15, respectively, will have turned about their respective pivot pins 38 and 39, and that the blade mounts 45, 62 and 69 and their associated scraper blades will be of such width and length as to permit their being turned and fully received within the interior recess defined by said elongated runner assemblies. As illustrated in FIG. 1, recesses 42*a*, 42*b* and 42*c* are provided in the upper flange portions of elongated runner 12, and recesses 43*a*, 43*b* and 43*c* are provided in the upper flange portions of elongated runner 11 to accommodate for the passage of respective axial shafts 43, 44 in their extension therethrough when the device is in collapsed or folded condition. It will be noted that upon the first fold having been completed, as illustrated in FIG. 5, the respective lengths of the front runner sections 17 and 24 and the central runner sections 18 and 25 are such that their hinged junctures will be in register or alignment. The separable hinge 21 between the front runner section 17 and the central runner section 18 of the elongated runner assembly 11 is provided with a removable pintle 87, and the seperable hinge 29 joining the rear runner section 26 with the central runner section 25 of the elongated runner assembly 12 is provided with that removable pintle 88, said pintles being held captive to prevent loss by respective chains 89 and 90 secured at their remote ends to nearby portions of their associated runners. To complete the folding into fully collapsed condition as illustrated in FIG. 6, the pintle 87 will be with drawn, permitting folding back of the front runner section 24 against the central runner section 25 about the hinge 28. Next, the pintle 88 will be removed to permit folding

back of the rear runner section 19 against the central runner section 18 about the hinge 22. Handles 91 and 92 fixed along the top rails of the central runner sections 18 and 25 facilitate carrying the fully collapsed trail leveler.

I claim:

1. A collapsible trail leveler for snowmobiles and the like comprising, in combination, a pair of coextensive, elongated runner members, parallel guide mechanism for maintaining said runner members in spaced, parallel relation, said parallel guide mechanism comprising a plurality of mutually spaced scraper blade mechanisms bridging said runners, said scraper blade mechanisms each comprising an upper support bracket pivotally journaled between said runners, a scraper blade, and vertically adjustable blade mounting means securing said blade to said support bracket, said runners being swingable into substantially side-by-side collapsed condition for storage of the trail leveler when not is use, said elongated runners being of channel shape along their lengths with the channel recesses facing one another, said scraper blade being of such size and shape as to be receivable within the chamber defined by said recesses when said runner members are in collapsed condition.

2. A collapsible trail leveler as defined in claim 1 wherein each of said elongated runners comprises a plurality of runner sections, the abutting ends of which are jointed at positions between mutually successive pairs of said scraper blade mechanisms, opposed pairs of said joints being in transverse alignment when said runners are in collapsed condition, each pair of such aligned joints constituting a separable hinge and a nonseparable hinge permitting sectional folding of the collapsed runners into a compact stacked assemblage for storage.

3. A collapsible trail leveler as defined in claim 2 including a semirigid hitch mechanism secured at one end to the forward ends of said runner members and having means at the other end for hitching to a towing vehicle.

4. A collapsible trail leveler as defined in claim 1 wherein said blade attaching means comprises a pair of bolts and cooperative wingnuts, each wingnut having an elongated wingnut extension portion swingably attached at one end to one of the wingnut wings and operative to be swung between bridging and outwardly-extending relation with respect to the wingnut wings.

5. A collapsible trail leveler as defined in claim 1 wherein each of said scraper blades comprises a straight edge at one side and a serrated edge at the opposite side.

6. A collapsible trail leveler as defined in claim 5 wherein one of said vertically adjustable blade mounting means comprises a rigid vertical plate for supporting its scraper blade in face-to-face relation, wherein another of said blade mounting means comprises an angularly directed plate for supporting its scraper blade in face-to-face relation, and wherein yet another of said blade mounting means comprises a resiliently yieldingly mounted vertical plate for supporting its scraper blade in face-to-face relation.

7. A collapsible trail leveler as defined in claim 6 wherein said separable hinges each comprise a removable pintle permitting separation of the hinge leaves.

8. A collapsible trail leveler as defined in claim 7 wherein said vertically adjustable blade mounting means comprising a pair of spaced blade adjustment wheels having axial shafts journaled with respect to said upper support bracket and threaded downwardly extending portions threadingly received in its associated blade mounting means.

9. A collapsible trail leveler as defined in claim 8 including a semirigid hitch mechanism secured at one end of the forward ends of said runner members and having means at the other end for hitching to a towing vehicle.