Innovation, Sciences et Développement économique Canada
Office de la Propriété Intellectuelle du Canada

Innovation, Science and Economic Development Canada
Canadian Intellectual Property Office

CA 3031299 A1 2018/02/01

(21) 3 031 299

(12) DEMANDE DE BREVET CANADIEN
CANADIAN PATENT APPLICATION

(13) A1

(86) Date de dépôt PCT/PCT Filing Date: 2017/07/24
(87) Date publication PCT/PCT Publication Date: 2018/02/01
(85) Entrée phase nationale/National Entry: 2019/01/18
(86) N° demande PCT/PCT Application No.: EP 2017/068577
(87) N° publication PCT/PCT Publication No.: 2018/019749
(30) Priorités/Priorities: 2016/07/26 (IN201641025453); 2016/09/08 (EP16187727.9)

(51) Cl.Int./Int.Cl. *F25J 1/00* (2006.01), *F25J 1/02* (2006.01)

(71) Demandeur/Applicant:
SHELL INTERNATIONALE RESEARCH MAATSCHAPPIJ B.V., NL

(72) Inventeurs/Inventors:
PARAMASIVAM, SENTHILKUMAR PARAMASIVAM, IN; ABOKI, UMAR, IN...

(74) Agent: NORTON ROSE FULBRIGHT CANADA LLP/S.E.N.C.R.L., S.R.L.

(54) Titre : PROCEDE ET APPAREIL POUR LE REFROIDISSEMENT D'UN ECHANGEUR DE CHALEUR CRYOGENIQUE

(54) Title: METHOD AND APPARATUS FOR COOLING DOWN A CRYOGENIC HEAT EXCHANGER

Fig.1

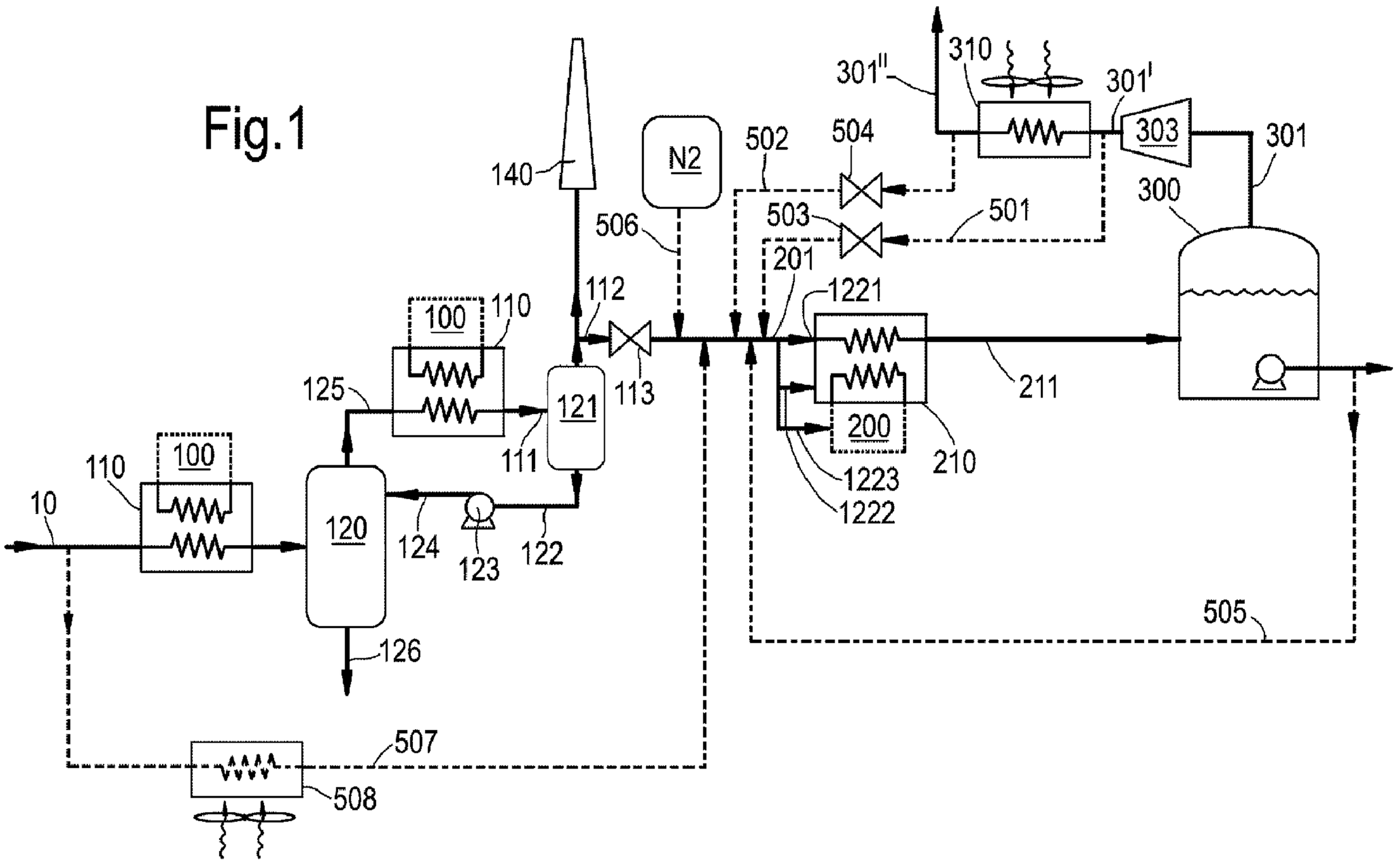

(57) Abrégé/Abstract:
The present invention relates to a method for cooling down a liquefaction system for liquefying a hydrocarbon- containing gas stream. The method for cooling down the liquefaction system comprises: a) performing a pre-cool-down procedure to cool down

(21) 3 031 299

(13) A1

(57) Abrégé(suite)/Abstract(continued):
the pre-cooling stage, b) performing a cryogenic cool-down procedure to cool down the main cooling stage. B) comprises forming a main cool-down stream (201) that meets a predetermined C_n^+specification. The main cool-down stream (201) is formed out of at least one auxiliary stream not being the pre-cooled hydrocarbon containing gas stream, and the cryogenic cool down procedure and the pre-cool down procedure are at least partially performed simultaneously.

(12) INTERNATIONAL APPLICATION PUBLISHED UNDER THE PATENT COOPERATION TREATY (PCT)

(19) World Intellectual Property Organization
International Bureau

(43) International Publication Date
01 February 2018 (01.02.2018)

WIPO | PCT

(10) International Publication Number
WO 2018/019749 A1

(51) International Patent Classification:
F25J 1/00 (2006.01) *F25J 1/02* (2006.01)

(21) International Application Number:
PCT/EP2017/068577

(22) International Filing Date:
24 July 2017 (24.07.2017)

(25) Filing Language: English

(26) Publication Language: English

(30) Priority Data:

201641025453	26 July 2016 (26.07.2016)	IN
16187727.9	08 September 2016 (08.09.2016)	EP

(71) Applicant *(for all designated States except US)*: **SHELL INTERNATIONALE RESEARCH MAATSCHAPPIJ B.V.** [NL/NL]; Carel van Bylandtlaan 30, 2596 HR THE HAGUE (NL).

(71) Applicant *(for US only)*: **SHELL OIL COMPANY** [US/US]; SHELL PLAZA 1, HOUSTON, Texas 77252-2463 (US).

(72) Inventors: **PARAMASIVAM, Senthilkumar, Paramasivam**; RMZ Centennial Campus B, # 8B Kundalahalli Main Road, Bangalore 560048 (IN). **ABOKI, Umar**; RMZ Centennial Campus B, # 8B Kundalahalli Main Road, Bangalore 560048 (IN).

(74) Agent: **MATTHEZING, Robert, Maarten**; PO Box 384, 2501 CJ THE HAGUE (NL).

(81) Designated States *(unless otherwise indicated, for every kind of national protection available)*: AE, AG, AL, AM, AO, AT, AU, AZ, BA, BB, BG, BH, BN, BR, BW, BY, BZ, CA, CH, CL, CN, CO, CR, CU, CZ, DE, DJ, DK, DM, DO, DZ, EC, EE, EG, ES, FI, GB, GD, GE, GH, GM, GT, HN, HR, HU, ID, IL, IN, IR, IS, JO, JP, KE, KG, KH, KN, KP, KR, KW, KZ, LA, LC, LK, LR, LS, LU, LY, MA, MD, ME, MG, MK, MN, MW, MX, MY, MZ, NA, NG, NI, NO, NZ,

(54) Title: METHOD AND APPARATUS FOR COOLING DOWN A CRYOGENIC HEAT EXCHANGER

Fig.1

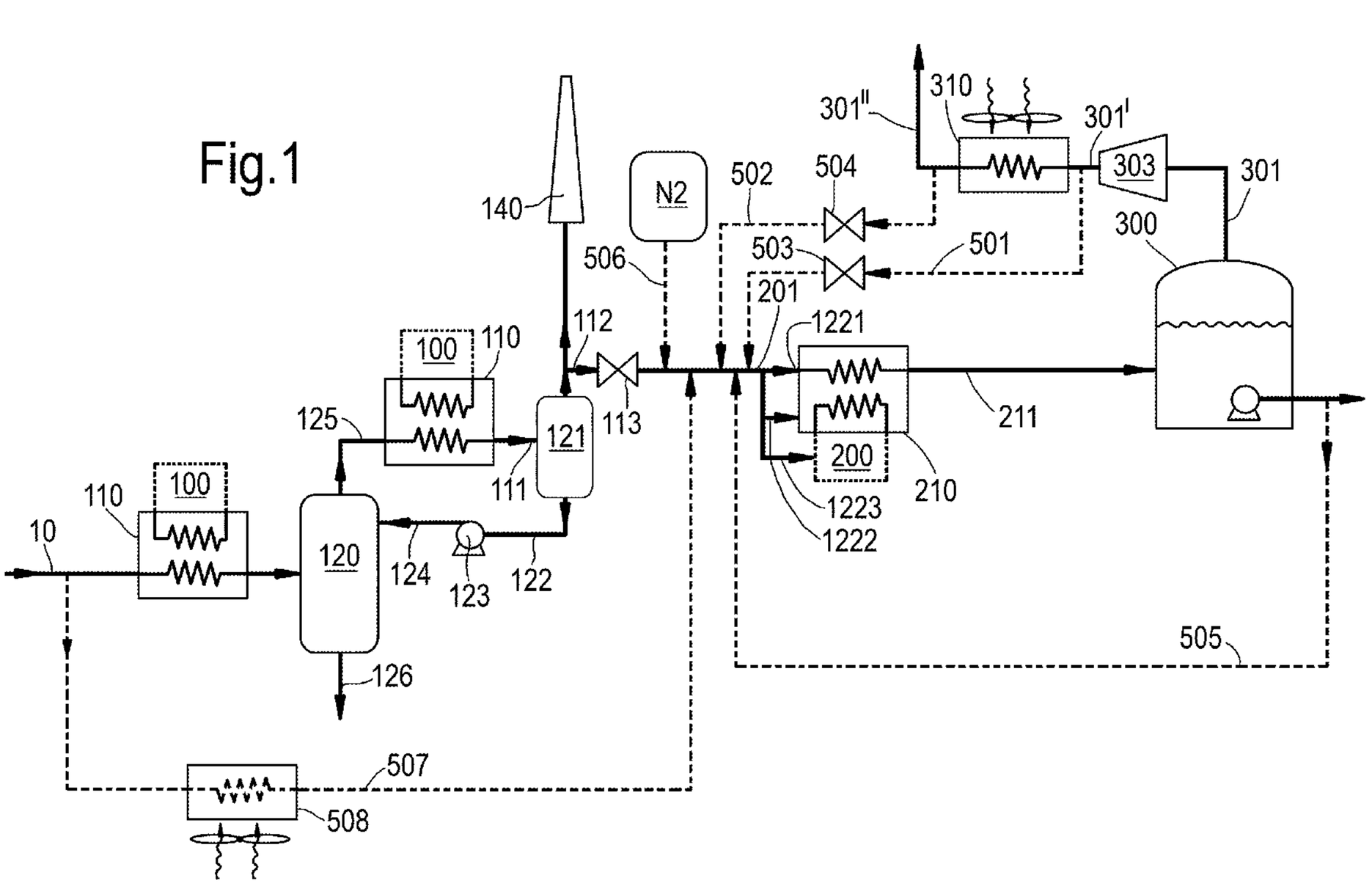

(57) Abstract: The present invention relates to a method for cooling down a liquefaction system for liquefying a hydrocarbon- containing gas stream. The method for cooling down the liquefaction system comprises: a) performing a pre-cool-down procedure to cool down the pre-cooling stage, b) performing a cryogenic cool-down procedure to cool down the main cooling stage. B) comprises forming a main cool-down stream (201) that meets a predetermined C_n^+specification. The main cool-down stream (201) is formed out of at least one auxiliary stream not being the pre-cooled hydrocarbon containing gas stream, and the cryogenic cool down procedure and the pre-cool down procedure are at least partially performed simultaneously.

[Continued on next page]

WO 2018/019749 A1

WO 2018/019749 A1

OM, PA, PE, PG, PH, PL, PT, QA, RO, RS, RU, RW, SA, SC, SD, SE, SG, SK, SL, SM, ST, SV, SY, TH, TJ, TM, TN, TR, TT, TZ, UA, UG, US, UZ, VC, VN, ZA, ZM, ZW.

(84) Designated States *(unless otherwise indicated, for every kind of regional protection available)*: ARIPO (BW, GH, GM, KE, LR, LS, MW, MZ, NA, RW, SD, SL, ST, SZ, TZ, UG, ZM, ZW), Eurasian (AM, AZ, BY, KG, KZ, RU, TJ, TM), European (AL, AT, BE, BG, CH, CY, CZ, DE, DK, EE, ES, FI, FR, GB, GR, HR, HU, IE, IS, IT, LT, LU, LV, MC, MK, MT, NL, NO, PL, PT, RO, RS, SE, SI, SK, SM, TR), OAPI (BF, BJ, CF, CG, CI, CM, GA, GN, GQ, GW, KM, ML, MR, NE, SN, TD, TG).

Declarations under Rule 4.17:

— *as to applicant's entitlement to apply for and be granted a patent (Rule 4.17(ii))*

Published:

— *with international search report (Art. 21(3))*

METHOD AND APPARATUS FOR COOLING DOWN A CRYOGENIC HEAT EXCHANGER

FIELD OF THE INVENTION

The present invention relates to a method for cooling down a liquefaction system for liquefying hydrocarbon-containing gas.

Such liquefaction systems typically comprise a (main) cryogenic heat exchanger arranged to cool a hydrocarbon-containing gas stream, such as a natural gas stream, which is typically treated and pre-cooled before being received by the cryogenic heat exchanger.

In another aspect, the present invention relates to a system and liquefaction system arranged to perform such a method.

BACKGROUND

Methods and systems for liquefying hydrocarbon-containing gas streams are well known in the art. It is desirable to liquefy a hydrocarbon-containing gas stream such as a natural gas stream. For instance, natural gas can be stored and transported over long distances more readily as a liquid than in gaseous form, because it occupies a smaller volume and does not need to be stored at high pressures.

Typically, before being liquefied, the hydrocarbon-containing gas stream is treated to remove one or more contaminants (such as H_2O, CO_2, H_2S and the like) which may freeze out during the liquefaction process.

Processes of liquefaction are known from the prior art in which one or more refrigerant cycles are used to cool and liquefy the hydrocarbon-containing gas stream.

Typically, the liquefaction system comprises

- a pre-cooling stage comprising one or more pre-cooling heat exchangers and a separator, such as a scrub column, and
- a main cooling stage comprising one or more (main) cryogenic heat exchangers and
- at least one LNG storage tank.

During normal operation a hydrocarbon-containing gas stream is subsequently passed through the pre-cooling stage, the main cooling stage and into the LNG storage tank.

For reliability reasons, the pre-cooled hydrocarbon-containing gas stream passed from the pre-cooling stage to main cooling stage, in particular to the cryogenic heat exchanger, is a relatively clean hydrocarbon-containing gas stream with low amounts of heavy ends. Typically the pre-cooled hydrocarbon-containing gas stream should comply with a predetermined C_n^+-specification, the C_n^+-specification specifying a maximum amount of molecules having n or more carbon molecules. The C_n^+-specification may for instance be a C_5^+-specification specifying that the maximum amount of molecules having 5 or more carbon molecules is less than a predetermined value, such as less than 0.15 mol%. The separator, such as a separator or a scrub column, is provided to remove the heavy molecules from the hydrocarbon-containing stream to meet this specification.

Typically, the separator is positioned in between two pre-cooling heat exchangers positioned in series.

The C_5^+-specification is associated with the one or more cryogenic heat exchangers to prevent solids being formed in the cryogenic heat exchangers.

Examples of liquefaction processes are a C3-MR process and a DMR process.

In a C3-MR process the pre-cooling stage uses mainly propane (i.e. >99 mol% propane) as refrigerant and the main

cooling stage uses a mixed refrigerant, i.e. a mixture of two or more refrigerants, such as a mixture of propane, ethane, methane and nitrogen.

In a DMR process, both the pre-cooling stage and the main cooling-stage use (different) mixed refrigerants.

Other liquefaction processes are known to the skilled person.

Before a liquefaction system is ready for normal operation, the liquefaction system including the cryogenic heat exchanger of the main cooling stage needs to be cooled down to or close to operating temperatures. This process is referred to as a cool-down procedure. Cool-down procedures are needed at first start up and after maintenance.

The cool-down procedure comprises two sub-procedures: the pre-cool-down procedure in which the pre-cooling stage including the separator are cooled down and prepared for operation and the cryogenic cool-down procedure in which the cryogenic heat exchanger is cooled down and prepared for operation.

Only when the separator of the pre-cooling stage is fully functioning, a pre-cooled hydrocarbon-containing gas stream can be obtained from the pre-cooling stage that meets the predetermined C_n^+-specification. Only then the cryogenic cool-down procedure can commence. It typically takes several hours after starting the pre-cool-down procedure before the pre-cooling stage is able to produce a pre-cooled hydrocarbon-containing gas stream that meets the predetermined C_n^+-specification.

So, in a typical cool-down procedure, the pre-cooling stage is started up and is used to generate clean/dew pointed natural gas that meets the C_n^+-specification of the cryogenic heat exchanger, which can then be used to cool down the

cryogenic heat exchanger and start up the cryogenic cool-down procedure.

Cool-down procedures take a substantial amount of time, for instance more than 48 hours. Stabilizing the separator, e.g. the scrub column, such that a stream becomes available in the pre-cooling stage that meets the predetermined C_n^+-specification may take many hours.

Once the cool-down procedure is finished, normal operation can start.

Automated manners to perform a cool-down procedure are known in the art, such as from US4809154 and WO09098278.

SHORT DESCRIPTION

It is an object of the invention to provide a method and system for cooling down a cryogenic heat exchanger in a liquid natural gas generating liquefaction system in a time efficient manner.

There is provided a method for cooling down a liquefaction system for liquefying a hydrocarbon-containing gas stream, the liquefaction system comprising a pre-cooling stage comprising one or more pre-cooling heat exchangers and a separator, a main cooling stage comprising one or more cryogenic heat exchangers and the liquefaction system further comprising at least one LNG storage tank, the pre-cooling stage being arranged to generate a pre-cooled hydrocarbon containing gas stream by pre-cooling the hydrocarbon-containing gas stream and passing the pre-cooled hydrocarbon containing gas stream to the main cooling stage, the method for cooling down the liquefaction system comprising:

a) performing a pre-cool-down procedure to cool down the pre-cooling stage, wherein the pre-cool-down procedure comprises feeding the hydrocarbon-containing gas stream to the pre-cooling stage,

b) performing a cryogenic cool-down procedure to cool down the main cooling stage, wherein the cryogenic cool-down procedure comprises feeding a main cool-down stream (201) to the main cooling stage,

wherein b) comprises forming the main cool-down stream (201) and passing the main cool-down stream (201) to the main cooling stage, the main cool-down stream (201) meeting a predetermined C_n^+-specification, the C_n^+-specification specifying a maximum amount of molecules having n or more carbon molecules,

wherein the main cool-down stream (201) is formed out of at least one auxiliary stream not being the pre-cooled hydrocarbon containing gas stream, and

wherein the cryogenic cool down procedure and the pre-cool down procedure are at least partially performed simultaneously.

The C_n^+-specification is associated with the one or more cryogenic heat exchangers to prevent solids being formed in the cryogenic heat exchangers and specifies a maximum amount of molecules having n or more carbon molecules. Typically, n $\geq$ 2, e.g. n = 3, n = 4 or n = 5. Typically, n = 5, as C_5^+-molecules will solidify in the cryogenic heat exchanger 210.

During most of the pre-cool down procedure (a), the (partially) pre-cooled hydrocarbon containing gas stream doesn't meet the C_n^+-specification. As long as the pre-cooling stage is not sufficiently cold yet, the pre-cooling stage is not able to remove the heavy molecules and the pre-cooled hydrocarbon containing gas stream doesn't meet the C_n^+-specification.

By forming the main cool-down stream from at least one auxiliary stream not being the pre-cooled hydrocarbon containing gas stream, it is possible to provide a main cool-down stream that meets the C_n^+-specification before the pre-

cool down procedure is able to generate such a stream and the cryogenic cool down procedure can start at an earlier time.

For all embodiments, the main cool-down stream 201 is formed out of at least one auxiliary stream not being the pre-cooled hydrocarbon containing gas stream and not being a split-off stream thereof.

Accordingly there is provided a liquefaction system for liquefying a hydrocarbon-containing gas stream, the liquefaction system comprising a pre-cooling stage comprising one or more pre-cooling heat exchangers and a separator, a main cooling stage comprising one or more cryogenic heat exchangers and the liquefaction system further comprising at least one LNG storage tank, the pre-cooling stage being arranged to generate a pre-cooled hydrocarbon containing gas stream by pre-cooling the hydrocarbon-containing gas stream and passing the pre-cooled hydrocarbon containing gas stream to the main cooling stage, the system comprising a control unit being arranged to cool down the liquefaction system by:

a) performing a pre-cool-down procedure to cool down the pre-cooling stage, wherein the pre-cool-down procedure comprises feeding the hydrocarbon-containing gas stream to the pre-cooling stage,

b) performing a cryogenic cool-down procedure to cool down the main cooling stage, wherein the cryogenic cool-down procedure comprises feeding a main cool-down stream via a main cool-down stream feed to the main cooling stage,

wherein the main cool-down stream feed is arranged to receive at least one auxiliary stream not being the pre-cooled hydrocarbon containing gas stream, and

wherein the control unit is arranged to perform the cryogenic cool down procedure and the pre-cool down procedure at least partially performed simultaneously.

According to an embodiment, the main cool-down stream feed is arranged to receive at least one auxiliary stream not being the pre-cooled hydrocarbon containing gas stream and at least part of the pre-cooled hydrocarbon containing gas stream.

SHORT DESCRIPTION OF THE DRAWINGS

The present invention will now be illustrated by way of example only, and with reference to embodiments and the accompanying non-limiting schematic drawings in which:

Fig. 1 schematically shows a liquefaction system encompassing a number of embodiments.

DETAILED DESCRIPTION

For the purpose of this description, a single reference number will be assigned to a line (conduit, pipe) as well as a stream carried by that line (conduit, pipe).

Were the term step is used in this text this term should not be understood as being limited to the embodiments provided here. Also, the steps may be performed in any technically possible order, including (partially) overlapping in time, as will be apparent to the skilled person.

Fig. 1 schematically depicts a liquefaction system 1 arranged to receive a hydrocarbon-containing gas stream 10, such as a natural gas stream. The hydrocarbon-containing gas stream 10 is preferably received from a gas treating plant (not shown). The gas treating plant removes contaminants, such as

- acid components (e.g. carbon dioxide, hydrogen sulphide) using an acid gas removal unit,
- mercury using a mercury removal unit and/or
- water using a dehydration unit.

The hydrocarbon-containing gas stream 10 may therefore also be referred to as a (pre-)treated hydrocarbon-containing gas stream 10.

The hydrocarbon-containing gas stream 10 mainly comprises methane, i.e. comprises >50 mol% methane, typically >80 mol%.

First, a high-level explanation of the normal steady-state operation of the liquefaction system 1 will be provided.

The liquefaction system 1 comprises a pre-cooling stage 100 comprising one or more pre-cooling heat exchangers 110 and a separator 120. The separator 120 is preferably a refluxed separator or a, optionally reboiled, scrub column. Fig. 1 shows two, serial, pre-cooling heat exchangers 110, but in practice more serial and/or parallel pre-cooling heat exchangers 110 may be present. Also, pre-cooling heat exchangers 110 may be present that are arranged to provide cooling to the mixed refrigerant of the main refrigerant cycle described in more detail below.

The separator 120 may be positioned in between pre-cooling heat exchangers 110, arranged to receive the hydrocarbon-containing gas stream 10 from a first pre-cooling heat exchanger and forward a light top stream 125 from the separator 120 to the second pre-cooling heat exchanger. The separator 120 may receive a reflux stream, fed to the stop of the separator, obtained as bottom stream from a reflux vessel 121.

The liquefaction system 1 further comprises a main cooling stage 200 comprising one or more (main) cryogenic heat exchangers 210. Again, Fig. 1 shows a single cryogenic heat exchanger 210, but in practice two or more serial and/or parallel cryogenic heat exchangers 210 may be present.

Finally, the liquefaction system 1 comprises at least one LNG storage tank 300 (one shown). Where reference is made to

a/the LNG storage tank in this text, it will be understood that this is done for convenience only and that in fact more than one LNG storage tank 300 may be present.

A boil-off gas stream 301 is obtained from the LNG storage tank 300, which will be at least partially passed to a BOG-compressor 303 to obtain pressurized boil-off gas stream 301' and a BOG heater or cooler, for instance using air as heating or cooling medium, to receive the pressurized boil-off gas stream 301' and generate a heated or cooled and pressurized boil-off gas stream 301'', which may for instance be used as fuel stream.

The choice between a BOG heater and BOG cooler depends on the temperature of the pressurized boil-off gas stream 301'. For a low pressure (e.g. 4-7 barg) BOG compressor 303, the compressor discharge temperature is cryogenic (-40 to -60 °C) and therefore a discharge BOG heater is provided. For high pressure (e.g. 20-27 barg) BOG compressor 303, the compressor discharge temperature is >100 °C and therefore a discharge BOG cooler is provided.

In this text the unit bar and bara are used to refer to bar absolute. The unit barg is used to refer to bar gauge, wherein bara - $bar_{atmospheric}$ = barg.

The boil-off gas stream 301 typically has a pressure close to ambient pressure and a cryogenic temperature (typically below minus 150°C). The heated or cooled and pressurized boil-off gas stream 301'' typically has a pressure above 5 or 20 bar, e.g. 6 bar or 25 bar, and a temperature above 10°C or 30°C, e.g. 40°C.

It will be understood that Fig. 1 shows a schematic and simplified liquefaction system 1. For instance, the refrigerant cycles associated with the pre-cooling stage 100 and the main cooling stage 200 are only shown partially and schematically and in practice may comprise a compressor, a

condenser and a pressure reduction device. The cooling stages using a mixed refrigerant may be arranged to split the mixed refrigerant in a light and heavy portion which are passed through the heat exchanger(s) separately. The refrigerant of the main cooling stage 200 may receive cooling duty from the refrigerant of the pre-cooling stage 100.

Also, it will be understood that further stages, including further cooling stages and devices may be present, such as a flashing stage in between the main cooling stage 200 and the LNG storage tank 300.

During normal operation, the hydrocarbon-containing gas stream 10 is passed to the separator 120, from which a heavy bottom stream 126 and a light top stream 125 are obtained.

The heavy bottom stream 126 may be further processed by a NGL stage (not shown), typically comprising a de-methanizer, a de-ethanizer etc. as will be known by the skilled person.

The light top stream 125 is passed to the at least one pre-cooling heat exchangers 110 via conduit(s) 125 to obtain a pre-cooled intermediate stream 111 which may be passed to reflux vessel 121 directly.

From the reflux vessel 121 a liquid bottom stream 122 is obtained which is passed to the top of the separator 120 as reflux stream 122, 124 optionally using a reflux pump 123. The reflux stream 124 is passed to (the top of) the separator 120 to increase the separation effect of the separator 120 (e.g. scrubbing effect in case of a scrub column) and thereby lower the amount of C_n^+ molecules in the light top stream 125 obtained from the separator, $n \geq 2$. Typically, $n = 5$, as C_5^+-molecules will solidify in the cryogenic heat exchanger 210.

A pre-cooled hydrocarbon containing gas stream 112 is obtained as top stream from the from the reflux vessel 121 which is passed to the main cryogenic cooling stage 200 to be

cooled further by the one or more cryogenic heat exchanger 210.

According to an alternative embodiment (not shown), the pre-cooled intermediate stream 111 is not passed to reflux vessel 121 directly, but the pre-cooled intermediate stream 111 is first passed to a warm bundle of the main cooling stage 200 to be further cooled by the main cooling stage 200, i.e. in the warm bundle, to generate a further cooled stream at a lower temperature to enable meet the C^{5+}-specification. The further cooled stream is fed to reflux vessel 121. The reflux vessel 121 generates an overhead vapour stream which is rooted back the main cooling stage 200 for further cooling, i.e. in the mid and cold bundle thereof, and a bottom liquid stream which is passed to the separator 120 as reflux stream.

Where in this text reference is made to a or the cryogenic heat exchanger 210, it will be understood that this encompasses one or more (serial and/or parallel) cryogenic heat exchangers.

The cryogenic heat exchanger 210 may be a coil-wound heat exchanger.

The cryogenic heat exchanger 210 may have an associated main refrigerant cycle 200 arranged to separate the mixed refrigerant into a light and heavy mixed refrigerant and may be a heat exchanger arranged to receive the light mixed refrigerant and the heavy mixed refrigerant separately. The cryogenic heat exchanger 210 may be divided in different sections with different bundles to carry the hydrocarbon containing gas stream to be liquefied, which may be referred to as the warm bundle and the cold bundle, with optionally a mid-bundle in between.

The pre-cooled hydrocarbon containing gas stream 112 may be cooled by the cryogenic heat exchanger 210 to obtain a

further cooled stream 211 which may be passed to the LNG storage tank 300. It will be understood that further equipment may be present between the cryogenic cooling stage 200 and the LNG storage tank 300, such as a final cooling stage and/or a flash stage.

During normal operation, pre-cooled hydrocarbon containing gas stream 112 should meet a predetermined C_n^+-specification of the cryogenic heat exchanger 210. The C_n^+-specification specifies a maximum fraction of molecules having n or more carbon molecules allowed to be comprised by the main cool down stream. According to an embodiment, n = 2 or n = 3 or n = 4 or n = 5. Typically, $n \geq 2$ and preferably n = 5.

As explained above, the liquefaction system 1 needs to go through a cool-down procedure after maintenance before it is ready for normal operation. There is provided a method for cooling down the liquefaction system, wherein the method comprises:

a) performing a pre-cool-down procedure to cool down the pre-cooling stage, wherein the pre-cool-down procedure comprises feeding the hydrocarbon-containing gas stream to the pre-cooling stage,

b) performing a cryogenic cool-down procedure to cool down the main cooling stage, wherein the cryogenic cool-down procedure comprises feeding a main cool-down stream to the main cooling stage,

wherein b) comprises forming a main cool-down stream (201) and passing the main cool-down stream to the main cooling stage, the main cool-down stream meeting a predetermined C_n^+-specification, the C_n^+-specification specifying a maximum amount of molecules having n or more carbon molecules,

wherein the main cool-down stream is formed out of at least one auxiliary stream not being the pre-cooled hydrocarbon containing gas stream, and

wherein the cryogenic cool down procedure and the pre-cool down procedure are at least partially performed simultaneously.

The main cool-down stream is formed out of at least one auxiliary stream not being the pre-cooled hydrocarbon containing gas stream from the pre-cooling stage including pre-cooled hydrocarbon containing gas streams from parallel pre-cooling stages. It will be understood and become clear from below described embodiments that part of the main cool-down stream may be formed from the pre-cooled hydrocarbon containing gas stream or part thereof.

The embodiments can advantageously be used in single train liquefaction systems, such as floating LNG facilities.

The pre-cool down procedure may start with step **a1)** which is pressurizing the separator to operating pressure, typically in the range of 55 - 60 bars.

Next, step **a2)**, the hydrocarbon-containing gas stream 10 is started to flow to the separator 120 and the pre-cooling refrigerant cycle 130 is started by starting pre-cooling refrigerant compressor(s) (not shown) to cool down the one or more pre-cooling heat exchangers 110.

A pre-cooled intermediate stream 111 starts to be produced and is sent to the reflux vessel 121 (directly or via the (warm bundle of the) cooling stage 200). As this flow is not sufficiently cold, no liquid bottom stream 122 is obtained from the reflux vessel 121. The pre-cooled gaseous top stream 112 obtained from the reflux vessel 121, which during this phase could be referred to as partially pre-cooled gaseous top stream 112, does not meet the C_n^+-

specification and may (partially) be flared via flare stack 40.

In step **a3)** cooling of the reflux pump 123 is commenced, for instance using a partially pre-cooled gaseous stream or (later) using liquid bottom stream 122.

Next, in step **a4)**, a liquid bottom stream 122 is obtained from the reflux vessel 121 and the C_n^+-content of the pre-cooled gaseous top stream 112 obtained from the reflux vessel 121 starts to decrease towards the C_n^+-specification. At the end of step **a4)** the C_n^+-content of the pre-cooled gaseous top stream 112 obtained from the reflux vessel 121 meets the predetermined C_n^+-specification.

During most of the pre-cool down procedure, no or only a small liquid bottom stream 122 is obtained from the reflux vessel 121 and there is no stream available in the pre-cooling stage 100 that meets the C_n^+-specification, in particular: the (partially) pre-cooled gaseous top stream 112 obtained from the reflux vessel 121 doesn't meet the C_n^+-specification and can't be passed to the main cooling stage 200.

The currently proposed embodiments overcome this by using at least one auxiliary stream not being the pre-cooled hydrocarbon containing gas stream and not being a split-stream of the pre-cooled hydrocarbon containing gas stream, to be part of the main cool-down stream thereby allowing the cryogenic cool down procedure and the pre-cool down procedure to be performed at least partially simultaneously.

The cryogenic cool down procedure and the pre-cool down procedure have an overlap in time. Typically, the cryogenic cool down procedure and the pre-cool down procedure are performed simultaneously for at least one hour, preferably at least three hours, more preferably at least eight hours and most preferably at least 10 hours.

So, in the context of the pre-cool-down procedure and the cryogenic cool-down procedure, the pre-cooled hydrocarbon containing gas stream 112 may also be referred to as a partially pre-cooled hydrocarbon containing gas stream as the pre-cool-down procedure to cool down the pre-cooling stage has not been completed at the time the main cryogenic cool-down procedure starts.

The temperature of the partially pre-cooled hydrocarbon containing gas stream is above a predetermined pre-cool temperature, the predetermined pre-cool temperature being below minus 20°C, e.g. minus 30°C.

The partially pre-cooled hydrocarbon containing gas stream 112 obtained from the pre-cooling stage may also be passed through a pressure reduction device 113 to reduce the pressure to a predetermined main cool down pressure. The partially pre-cooled hydrocarbon containing gas stream 112 may be passed through pressure reduction device 113 to reduce the temperature of the partially pre-cooled hydrocarbon containing gas stream to less than minus 70°C to provide cold to the main cool-down stream.

According to an embodiment, at least one auxiliary stream meets a second C_n^+-specification, the second C_n^+-specification specifying a second maximum amount of molecules having n or more carbon molecules, the second maximum amount being lower than the maximum amount. The second C_n^+-specification mentioned above may be $C_5^+ < 0.01$ mol%.

This is in particular advantageous when the auxiliary stream is mixed with the pre-cooled hydrocarbon containing gas stream to form the main cool-down stream. According to such an embodiment, the mass flow rate of the one or more auxiliary streams with respect to the mass flow rate of the pre-cooled hydrocarbon containing gas stream from the pre-cooling stage are preferably controlled in relation to each

other such that a main cool-down stream 201 is obtained that meets the predetermined C_n^+-specification.

The mass flow rate of the one or more auxiliary streams with respect to the mass flow rate of the pre-cooled hydrocarbon containing gas stream from the pre-cooling stage are preferably controlled in relation to each other such that a main cool-down stream 201 is obtained having a temperature below minus 20°C, preferably below minus 25°C, for instance at a temperature of minus 35°C. This may be achieved by passing the partially pre-cooled hydrocarbon containing gas stream 112 through pressure reduction device 113, thereby reducing the temperature of the partially pre-cooled hydrocarbon containing gas stream. This may be done to ensure the main cool-down stream 201 is sufficiently cold.

Furthermore, the mass flow rate of the one or more auxiliary streams with respect to the mass flow rate of the pre-cooled hydrocarbon containing gas stream from the pre-cooling stage are preferably controlled in relation to each other such that a main cool-down stream 201 is obtained that meets a predetermined mass flow needed for performing the cryogenic cool down procedure.

According to an embodiment, the C_n^+-specification is C_5^+ < 0.15 mol%. According to such a specification, the main cool-down stream 201 comprises less than 0.15 mol% hydrocarbon molecules with five or more carbon atoms. According to a further embodiment, the C_n^+-specification is C_5^+ < 0.25 mol%. The second C_n^+-specification mentioned above may be C_5^+ < 0.01 mol%.

According to a further embodiment, the C_n^+-specification is a function of the temperature of the main cooling stage, wherein the C_n^+-specification decreases with decreasing temperature of the main cooling stage. According to such an

embodiment, forming the main cool-down stream comprises obtaining a temperature indication of the main cooling stage.

The mass flow rate of the one or more auxiliary streams with respect to the mass flow rate of the pre-cooled hydrocarbon containing gas stream from the pre-cooling stage are preferably controlled in relation to each based on the temperature indication of the main cooling stage or a C_n^+-specification derived therefrom.

According to an embodiment, **b)** comprises

- obtaining a pre-cooled stream from the pre-cooling stage (112), the pre-cooled stream being derived from the hydrocarbon-containing gas stream (10),
- obtaining one or more auxiliary streams (501; 502; 505; 506; 507) and
- mixing the pre-cooled stream (112) and the auxiliary stream to obtain the main cool-down stream (201).

The one or more auxiliary streams are not the pre-cooled hydrocarbon containing gas stream. The auxiliary streams meet a second C_n^+-specification, the second C_n^+-specification specifying a second maximum amount of molecules having n or more carbon molecules, the second maximum amount being lower than the maximum amount associated with the predetermined C_n^+-specification.

According to an embodiment, the at least one auxiliary stream comprises one or more of the following:

- boil-off gas (501, 502) obtained from the at least one LNG storage tank,
- liquid natural gas (505) obtained from the at least one LNG storage tank and
- nitrogen (506) obtained from a N_2-source.

The embodiments using a boil-off stream and/or using liquid natural gas as auxiliary stream(s) are in particular relevant to situations wherein the cool down procedure is

applied after maintenance, as in such situations an at least partially filled LNG storage tank 300 is usually available.

Different embodiments will be described in more detail below.

According to an embodiment, the hydrocarbon-containing gas stream 10 is a lean hydrocarbon-containing gas stream.

The embodiments are in particular advantageous for lean hydrocarbon-containing gas streams 10, as lean hydrocarbon-containing gas streams 10 require more cooling and thus more cool-down time in order to generate a liquid bottom stream 122 to be used in the separator 120 to stabilise the hydrocarbon-containing gas stream. The liquid bottom stream 122 comprises mostly heavy ends and these are easier to generate if their composition is higher, as is the case for a rich or non-lean stream.

The term lean is used to indicate a hydrocarbon-containing gas stream 10 comprising relatively low amount of hydrocarbon molecules heavier than methane, i.e. C_2^+-content < 0.10 mol% or < 0.07 mol%. Table 1 below provides a typical composition of a lean hydrocarbon-containing gas stream 10 as may be used in the embodiments:

Molar Component	**Mol-Fraction**
N_2	0.037
C_1	0.899
C_2	0.036
C_3	0.016
C_4^+	0.012

Table 1

It is noted that during the pre-cool-down procedure to cool down the pre-cooling stage the C_5^+-composition of the light top stream 125 from the separator 120 and of the pre-

cooled hydrocarbon containing gas stream 112 obtained as top stream from the from the reflux vessel 121 may be higher than that of the hydrocarbon-containing gas stream 10 due to the not optimally functioning separator 120 lacking a reflux stream 124.

According to an embodiment the one or more cryogenic heat exchangers (210) comprises refrigerant tubes, hydrocarbon tubes and a shell side and **b)** comprises feeding the main cool down stream (201) to the refrigerant tubes, hydrocarbon tubes and the shell side.

The main cool-down stream 112 is typically fed to all parts of the one or more cryogenic heat exchangers 210, including the flow paths/tubes of the natural gas stream (during normal operation), i.e. pre-cooled gaseous top stream as well as the flow paths of the main refrigerant. In case the cryogenic heat exchanger is a coil-wound heat exchanger, during the cryogenic cool-down procedure, the pre-cooled gaseous top stream may be passed through all tubes and the shell side to cool down the cryogenic heat exchanger.

As schematically shown in Fig. 1, the main cool-down stream line 112 is split into a first main cool-down stream line 1221 being in fluid communication with the flow paths/tubes of the natural gas stream, a second main cool-down stream line 1222 being in fluid communication with the flow paths/tubes of the shell side a third main cool-down stream line 1223 being in fluid communication with the flow paths/tubes of the main refrigerant.

According to an embodiment, schematically depicted in Fig. 1, **b)** comprises

- obtaining a pre-cooled stream from the pre-cooling stage (112), the (partially) pre-cooled stream being derived from the hydrocarbon-containing gas stream (10),

- obtaining an auxiliary stream (501; 502) obtained from a boil-off stream (301) obtained from the at least one LNG storage tank (300) and
- mixing the pre-cooled stream (112) and the auxiliary stream to obtain the main cool-down stream (201).

The (partially) pre-cooled stream 112 from the pre-cooling stage 100 doesn't meet the predetermined C_n^+-specification. The boil-off stream 301 from the at least one LNG storage tank 300 has a C_n^+-content that is below the predetermined C_n^+-specification. The C_5^+-content of the boil-off stream 301 is typically zero.

By mixing the at least partially pre-cooled stream 112 and the at least part of the boil-off stream 301, a main cool-down stream 201 is obtained that meets the predetermined C_n^+-specification. In other words, by mixing or blending the at least partially pre-cooled stream 112 which doesn't meet the C_n^+-specification with the at least part of the boil-off stream which more than meets the C_n^+-specification (i.e. meets the second C_n^+-specification), a combined stream 201 is obtained that meets the predetermined C_n^+-specification before the pre-cool down procedure has been finished.

This has the advantage that the cryogenic cool down procedure can start earlier, i.e. before the pre-cool down procedure has finished and before the pre-cool down procedure is able to generate a stream that meets the predetermined C_n^+-specification. As a result, the total time needed for the cool-down procedure can be reduced significantly, for instance with more than 10 hours.

The pre-cooled hydrocarbon containing gas stream 112 is formed from the entire top stream from the reflux vessel 121 or a portion thereof.

It is noted that according to the alternative embodiment, wherein the pre-cooled intermediate stream 111 is not passed

to reflux vessel 121 (the warm bundle of) the main cooling stage 200 to be further cooled by the main cooling stage 200, stream 112 is still referred to as pre-cooled hydrocarbon containing gas stream 112 which is passed to the main cooling stage from the pre-cooling stage. Reflux vessel 121 is considered to form part of the pre-cooling stage.

As described above, the boil-off gas stream 301 is obtained from the LNG storage tank 300, which will be at least partially passed to a BOG-compressor 303 to obtain pressurized boil-off gas stream 301' and a BOG heater or cooler (depending on the temperature of the pressurized boil-off gas stream 301'), for instance using air as heating or cooling medium, to receive the pressurized boil-off gas stream 301' and generate a heated or cooled and pressurized boil-off gas stream 301'', which may for instance be used as fuel stream.

The auxiliary streams may be formed as a side stream 501 from the pressurized boil-off gas stream 301' and/or as a side stream 502 from the cooled or heated pressurized boil-off gas stream 301''.

According to a preferred embodiment, the pre-cooled stream from the pre-cooling stage 112 is mixed with an auxiliary stream 502 obtained as a side stream from the heated or cooled and pressurized boil-off gas stream 301'' to obtain the main cool-down stream 201.

Pressure reduction devices 503, 504 may be present to let down the pressure of the auxiliary streams 501, 502 to obtain an auxiliary stream having a predetermined main cool down pressure.

The pre-cooled stream 112 may also be passed through a pressure reduction device 113 to reduce the pressure to the predetermined main cool down pressure.

The pressure reduction devices 113, 503, 504 may be embodied as a valve, a JT-valve and/or an expander. The pressure reduction may be performed by pressure reduction valves, such as pressure reduction valve 113 present in conduit 112 carrying the at least partially pre-cooled stream 112 and pressure reduction valve 503, 504 present in lines 501, 502 respectively carrying the boil-off stream 302.

So, according to an embodiment, the at least partially pre-cooled stream 112 and the auxiliary stream 501; 502 obtained from the boil-off stream 301 are reduced in pressure to the predetermined main cool down pressure (P_{201}) before being mixed. Alternatively, the pressure reduction step may be applied to the main cool-down stream 201, thus after mixing.

The main cool-down stream 201 provided to the cryogenic heat exchanger 210 has a pressure equal to the predetermined main cool down pressure. The main cool down pressure is typically in the range of 2 - 4 barg, for instance 2.5 barg.

According to an alternative embodiment, also schematically depicted in Fig. 1, **b)** comprises

- obtaining a pre-cooled stream from the pre-cooling stage 112, the (partially) pre-cooled stream being derived from the hydrocarbon-containing gas stream 10,
- obtaining an auxiliary stream 506 from a nitrogen-source (N2), the auxiliary stream 506 mainly consisting of nitrogen and
- mixing the pre-cooled stream 112 and the auxiliary stream 506 from the nitrogen-source (N2) to obtain the main cool-down stream 201.

The auxiliary stream 506 mainly consisting of nitrogen, may have a pressure of 7 barg and a temperature of 30 °C.

The auxiliary stream 506 mainly consisting of nitrogen may be obtained from a dedicated nitrogen-source (N2) or process plant nitrogen supply system. The auxiliary stream mainly consisting of nitrogen, typically comprises more than 90 mol% nitrogen or even more than 99 mol% nitrogen.

Although not shown, conduit 506 carrying the auxiliary stream 506 mainly consisting of nitrogen may comprise a pressure reduction device, i.e. a (JT-)valve or expander to let down the pressure of the auxiliary stream 506 to the appropriate pressure, i.e. the predetermined main cool down pressure (P_{201}).

Embodiments described above have in common that the auxiliary stream is mixed with the pre-cooled stream 112 obtained from the pre-cooling stage.

According to these embodiments the mass flow rate of the partially pre-cooled stream (from the pre-cooling stage 112) is MF_{112} and the mass flow rate of the auxiliary streams combined is MF_{aux} and $MF_{112} > MF_{aux}$ and $MF_{112} > 1.5* MF_{aux}$. The mass flow rate of the auxiliary streams combined is the sum of the mass flow rates of the one or more auxiliary streams (which may also be referred to as the mass flow rate of the combined auxiliary streams). It will be understood that this also encompasses the situation of a single auxiliary stream.

According to a further embodiment the ratio (R) of the mass flow rate of the partially pre-cooled stream (from the pre-cooling stage 112) MF_{112} and the mass flow rate of the auxiliary streams MF_{aux} combined is determined based on a temperature indication (T_{MCHE}) of the main cooling stage or based on a C_n^+-specification derived from the temperature indication. The ratio R (= MF_{112}/MF_{aux}) may thus be a function of the temperature indication (T_{MCHE}): R = f(T_{MCHE}). The ratio may further depend on an obtained, i.e. measured or computed,

C_n^+-value ($C_{n,112}^+$) of the partially pre-cooled stream 112: R = f(T_{MCHE}, $C_{n,112}^+$).

The method may further comprise controlling the mass flow rates of the partially pre-cooled stream and the mass flow rate of the auxiliary stream(s) to meet the determine ratio (R). The liquefaction according to this embodiment may comprise a controller arranged to obtain the temperature indication (T_{MCHE}) from a suitable temperature sensor, determine the ratio R and control the mass flow rates of the partially pre-cooled stream and the mass flow rate of the auxiliary stream(s) to meet the determined ratio (R).

According to an embodiment, **b)** comprises

- obtaining a first auxiliary stream by taking a side-stream 501 from the pressurized boil-off gas stream 301'
- obtaining a second auxiliary stream 502 by taking a side-stream from the heated or cooled and pressurized boil-off gas stream 301''and
- mixing the first and second auxiliary streams 501, 502 to obtain the main cool-down stream 201.

As shown in Fig. 1, pressure reduction devices 503, 504 may be present to let down and equalize the pressure of the first and second auxiliary stream 501, 502.

As explained above, the boil-off gas stream 301 obtained from the LNG storage tank 300 is at least partially passed through a BOG-compressor 303 to obtain pressurized boil-off gas stream 301' and a BOG heater or cooler, for instance using air as heating medium, to receive the pressurized boil-off gas stream 301' and generate a heated or cooled and pressurized boil-off gas stream 301'', which may for instance be used as fuel stream.

The first auxiliary stream 501 is obtained as side stream from the pressurized boil-off gas stream 301' (i.e.

downstream the BOG-compressor 303 and upstream the BOG heater or cooler 310) and the second auxiliary stream 502 is obtained as side stream from the heated pressurized boil-off gas stream 301''.

According to an embodiment, **b)** comprises

- obtaining a first auxiliary stream 501; 502 obtained from a boil-off stream 301 obtained from the at least one LNG storage tank 300 and
- obtaining a second auxiliary stream 507 by taking a side-stream from the hydrocarbon-containing gas stream 10 upstream of the pre-cooling stage 100,
- mixing the first and second auxiliary streams 501, 502; 507 to obtain the main cool-down stream 201.

According to this embodiment, the first auxiliary stream 301 is preferably obtained as side stream from the pressurized boil-off gas stream 301' (i.e. downstream the BOG-compressor 303 and upstream the BOG heater or cooler 310).

The second auxiliary stream 507 is preferably taken downstream of any pre-treatment stages but upstream of the pre-cooling stage. The second auxiliary stream 507 may be cooled using an ambient stream by a suitable ambient cooler 508, such as an air or water cooler.

According to an embodiment, **b)** comprises

- obtaining a first auxiliary stream 501; 502 being a liquid natural gas stream 505 from the at least one LNG storage tank and
- obtaining a second auxiliary stream 502 by taking a side-stream from the hydrocarbon-containing gas stream (10) upstream of the pre-cooling stage 100,

- mixing the first and second auxiliary streams 501, 502 to obtain the main cool-down stream 201.

The second auxiliary stream is preferably taken downstream of any pre-treatment stages but upstream of the pre-cooling stage.

With reference to all embodiments described above, the main cool-down stream is fed to the main cooling stage typically at a pressure 1-4 or 2 - 4 barg (i.e. below 40 barg).

This is done until one cryogenic heat exchanger (210) has reached a predetermined first temperature or first temperature profile.

The predetermined first temperature may be in the range of minus 15°C - minus 35°C and may be applied to one or more predetermined positions in the at least one cryogenic heat exchangers 210. Also a first temperature profile may be applied in which different predetermined temperatures at different predetermined positions in the at least one cryogenic heat exchangers 210 are used, such as minus 20°C for a position at or near the top and minus 30°C for a position at or close to the bottom of the respective cryogenic heat exchanger 210.

According to an embodiment, b) is performed until the one or more cryogenic heat exchangers have reached a predetermined first temperature or first temperature profile, subsequently the method continuing with

- feeding a pressurized main cool-down stream 201 to the main cooling stage to further cool-down the main cooling stage, the main cool-down stream 201 having a pressure above 40 barg.

The main cool-down stream 201 may be provided at a pressure above 40 barg by using suitable compressors and/or by-passing pressure reduction devices for the different streams together forming the main cool-down stream 201.

During this phase the main cooling stage and in particular the cryogenic heat exchanger(s) can be further cooled down to reach a predetermined second temperature or predetermined second temperature profile. The predetermined second temperature is lower than the predetermined first temperature and the predetermined second temperature profile is lower than the predetermined first temperature profile.

Liquefaction in the main cooling stage 200 is more efficiently at higher pressures. Therefore, it is advantageous to provide a main cool-down stream 201 at a pressure above 40 barg. Also, this allows to bring the at least one cryogenic heat exchangers 210 to the pressure used during actual production and thereby a smooth transition from cool-down to actual production is ensured.

The predetermined second temperature may be in the range of minus 130°C - minus 150°C and may be applied to one or more predetermined positions in the at least one cryogenic heat exchangers 210. Also a second temperature profile may be applied in which different predetermined temperatures at different predetermined positions in the at least one cryogenic heat exchangers 210 are used, such as minus 135°C for a position at or near the top and minus 150°C for a position at or close to the bottom of the respective cryogenic heat exchanger 210.

This embodiment further reduces the time required for performing the pre-cool down procedure and the cryogenic cool down procedure as it allows cooling down the main cooling stage to temperatures below minus 130°C and pressurize the main cooling stage before the pre-cooling stage 100 is able

to generate a stream that meets the predetermined C_n^+-specification.

By further reducing the start-up time for the liquefaction system, the production of liquefied natural gas can commence early thereby increasing the up-time. Also, flaring is further reduced.

The person skilled in the art will understand that the present invention can be carried out in many various ways without departing from the scope of the appended claims.

CLAIMS

1. Method for cooling down a liquefaction system for liquefying a hydrocarbon-containing gas stream, the liquefaction system comprising a pre-cooling stage comprising one or more pre-cooling heat exchangers and a separator, a main cooling stage comprising one or more cryogenic heat exchangers and the liquefaction system further comprising at least one LNG storage tank, the pre-cooling stage being arranged to generate a pre-cooled hydrocarbon containing gas stream by pre-cooling the hydrocarbon-containing gas stream and passing the pre-cooled hydrocarbon containing gas stream to the main cooling stage, the method for cooling down the liquefaction system comprising:

a) performing a pre-cool-down procedure to cool down the pre-cooling stage, wherein the pre-cool-down procedure comprises feeding the hydrocarbon-containing gas stream to the pre-cooling stage,

b) performing a cryogenic cool-down procedure to cool down the main cooling stage, wherein the cryogenic cool-down procedure comprises feeding a main cool-down stream (201) to the main cooling stage,

wherein b) comprises forming the main cool-down stream (201) and passing the main cool-down stream (201) to the main cooling stage, the main cool-down stream (201) meeting a predetermined C_n^+-specification, the C_n^+-specification specifying a maximum amount of molecules having n or more carbon molecules,

wherein the main cool-down stream (201) is formed out of at least one auxiliary stream not being the pre-cooled hydrocarbon containing gas stream, and

wherein the cryogenic cool down procedure and the pre-cool down procedure are at least partially performed simultaneously.

2. Method according to claim 1, wherein the at least one auxiliary stream meets a second C_n^+-specification, the second C_n^+-specification specifying a second maximum amount of molecules having n or more carbon molecules, the second maximum amount being lower than the maximum amount.

3. Method according to any one of the preceding claims, wherein the predetermined C_n^+-specification is $C_5^+ < 0.15$ mol%.

4. Method according to any one of the preceding claims, wherein the at least one auxiliary stream comprises one or more of the following:

- boil-off gas (501, 502) obtained from the at least one LNG storage tank,
- liquid natural gas (505) obtained from the at least one LNG storage tank and
- nitrogen (506) obtained from a N_2-source.

5. Method according to any one of the preceding claims, wherein the hydrocarbon-containing gas stream (10) is a lean hydrocarbon-containing gas stream.

6. Method according to any one of the preceding claims, wherein the one or more cryogenic heat exchangers (210) comprises refrigerant tubes, hydrocarbon tubes and a shell side and **b)** comprises feeding the main cool down stream (201) to the refrigerant tubes, hydrocarbon tubes and the shell side.

7. Method according to any one of the preceding claims, wherein b) comprises

- obtaining a pre-cooled stream from the pre-cooling stage (112), the (partially) pre-cooled stream being derived from the hydrocarbon-containing gas stream (10),
- obtaining one or more auxiliary streams (501; 502; 505; 506; 507) and
- mixing the pre-cooled stream (112) and the one or more auxiliary streams to obtain the main cool-down stream (201).

8. Method according to any one of the preceding claims, wherein b) comprises

- obtaining a pre-cooled stream from the pre-cooling stage (112), the (partially) pre-cooled stream being derived from the hydrocarbon-containing gas stream (10),
- obtaining an auxiliary stream (501; 502) obtained from a boil-off stream (301) obtained from the at least one LNG storage tank (300) and
- mixing the pre-cooled stream (112) and the auxiliary stream to obtain the main cool-down stream (201).

9. Method according to any one of the claims 1 - 7, wherein b) comprises

- obtaining a pre-cooled stream from the pre-cooling stage (112), the (partially) pre-cooled stream being derived from the hydrocarbon-containing gas stream (10),
- obtaining an auxiliary stream (506) from a nitrogen-source (N2), the auxiliary stream (506) mainly consisting of nitrogen and

- mixing the pre-cooled stream (112) and the auxiliary stream (506) from the nitrogen-source (N2) to obtain the main cool-down stream (201).

10. Method according to any one of the preceding claims, wherein the method comprises obtaining a temperature indication (T_{MCHE}) of the main cooling stage and determine a ratio (R) of the mass flow rate of the partially pre-cooled stream and the mass flow rate of the auxiliary streams combined based on the temperature indication (T_{MCHE}).

11. Method according to any one of the claims 1 - 6, wherein b) comprises

- obtaining a first auxiliary stream by taking a side-stream 501 from the pressurized boil-off gas stream 301'
- obtaining a second auxiliary stream 502 by taking a side-stream from the heated or cooled and pressurized boil-off gas stream 301''and
- mixing the first and second auxiliary streams (501, 502) to obtain the main cool-down stream (201).

12. Method according to any one of the claims 1 - 6, wherein b) comprises

- obtaining a first auxiliary stream (501; 502) obtained from a boil-off stream (301) obtained from the at least one LNG storage tank (300) and
- obtaining a second auxiliary stream 502 by taking a side-stream from the hydrocarbon-containing gas stream (10) upstream of the pre-cooling stage (100),
- mixing the first and second auxiliary streams (501, 502) to obtain the main cool-down stream (201).

13. Method according to any one of the claims 1 - 6, wherein **b)** comprises

- obtaining a first auxiliary stream (501; 502) being a liquid natural gas stream (505) from the at least one LNG storage tank and
- obtaining a second auxiliary stream 502 by taking a side-stream from the hydrocarbon-containing gas stream (10) upstream of the pre-cooling stage (100),
- mixing the first and second auxiliary streams (501, 502) to obtain the main cool-down stream (201).

14. Method according to any one of the preceding claims, wherein b) is performed until the one or more cryogenic heat exchangers have reached a predetermined first temperature or first temperature profile, subsequently the method continuing with

- feeding a pressurized main cool-down stream 201 to the main cooling stage to further cool-down the main cooling stage, the main cool-down stream 201 having a pressure above 40 barg.

15. Liquefaction system for liquefying a hydrocarbon-containing gas stream, the liquefaction system comprising a pre-cooling stage comprising one or more pre-cooling heat exchangers and a separator, a main cooling stage comprising one or more cryogenic heat exchangers and the liquefaction system further comprising at least one LNG storage tank, the pre-cooling stage being arranged to generate a pre-cooled hydrocarbon containing gas stream by pre-cooling the hydrocarbon-containing gas stream and passing the pre-cooled hydrocarbon containing gas stream to the main cooling stage, the system comprising a control unit being arranged to cool down the liquefaction system by:

a) performing a pre-cool-down procedure to cool down the pre-cooling stage, wherein the pre-cool-down procedure comprises feeding the hydrocarbon-containing gas stream to the pre-cooling stage,

b) performing a cryogenic cool-down procedure to cool down the main cooling stage, wherein the cryogenic cool-down procedure comprises feeding a main cool-down stream via a main cool-down stream feed to the main cooling stage, wherein the main cool-down stream feed is arranged to receive at least one auxiliary stream not being the pre-cooled hydrocarbon containing gas stream, and

wherein the control unit is arranged to perform the cryogenic cool down procedure and the pre-cool down procedure at least partially performed simultaneously.

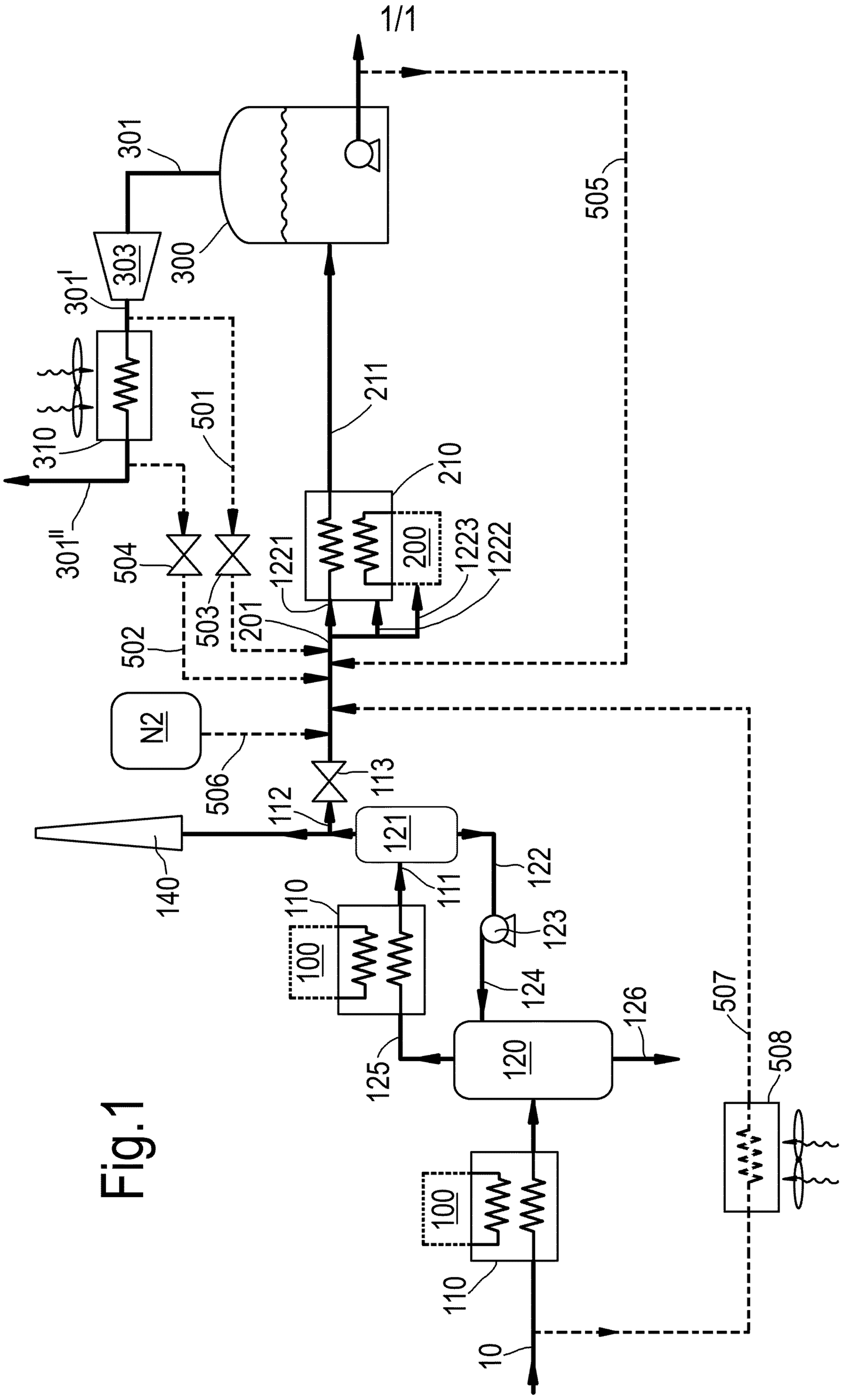
1/1
505
301
300
303
301'
310
501
211
210
301"
504
503
1221
200
1223
1222
502
201
N2
506
113
112
121
140
122
111
110
100
123
124
126
120
125
507
508
100
110
10

Fig.1

Fig.1

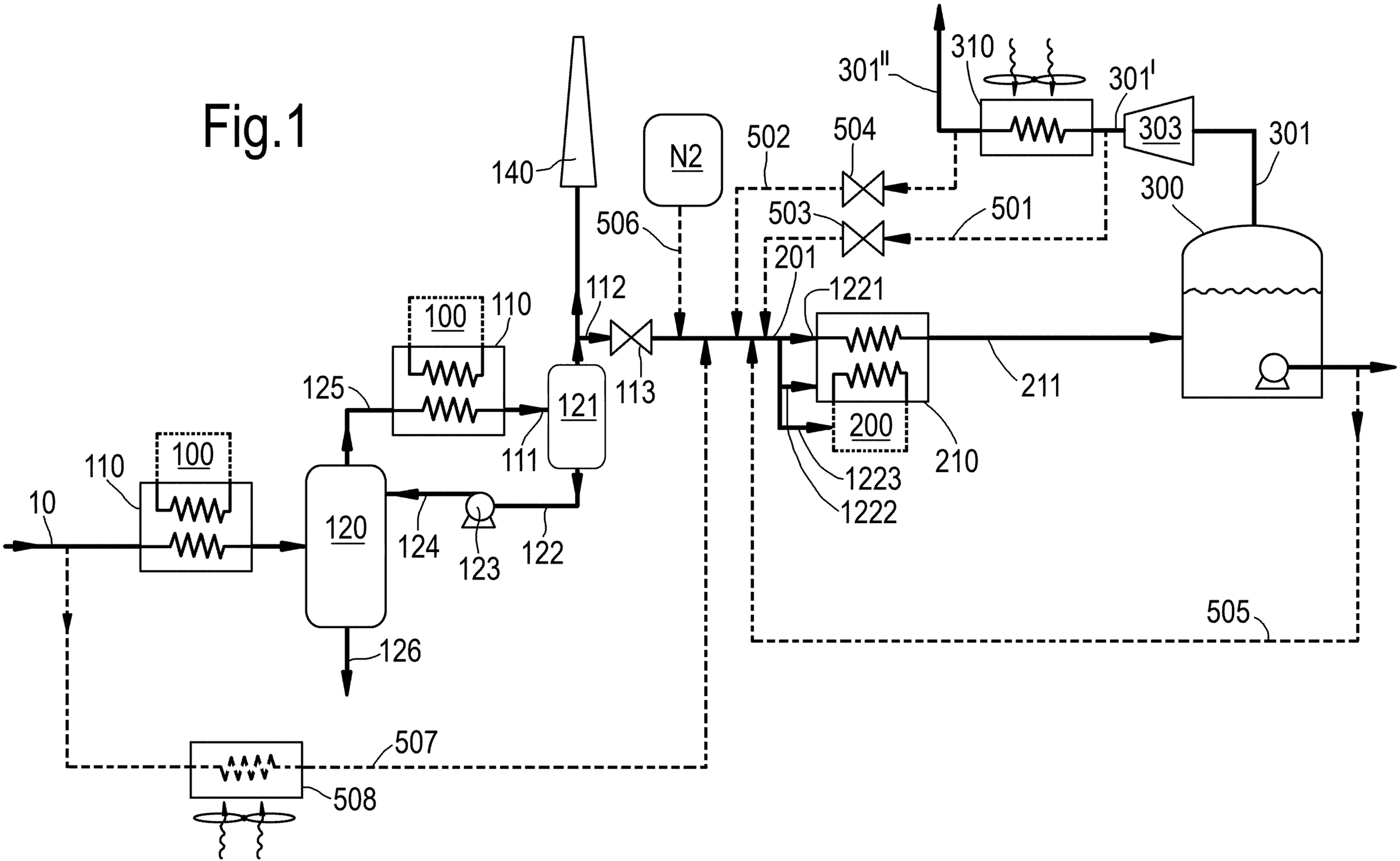

10
100
110
120
121
122
123
124
125
126
111
112
113
140
N2
506
502
504
503
501
201
1221
200
210
1223
1222
211
300
301
301'
301''
303
310
505
507
508