Feb. 17, 1931. W. A. SPEAR 1,792,514

VENTILATING FAN

Filed May 11, 1929

Fig. 1

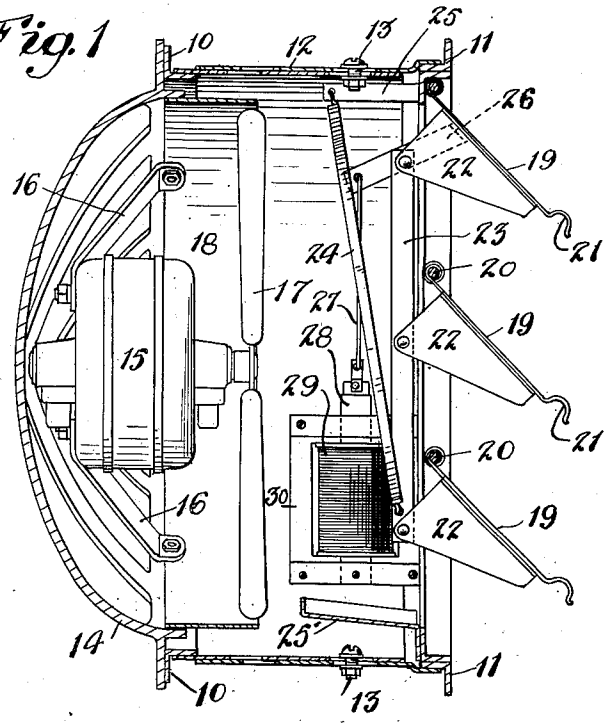

Fig. 3

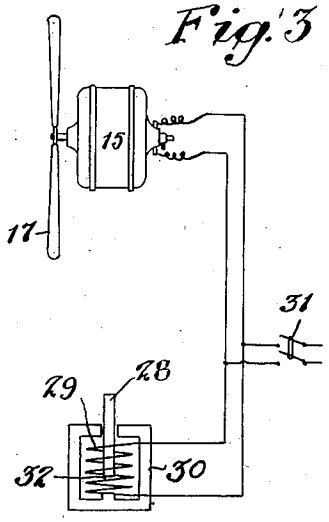

Fig. 2

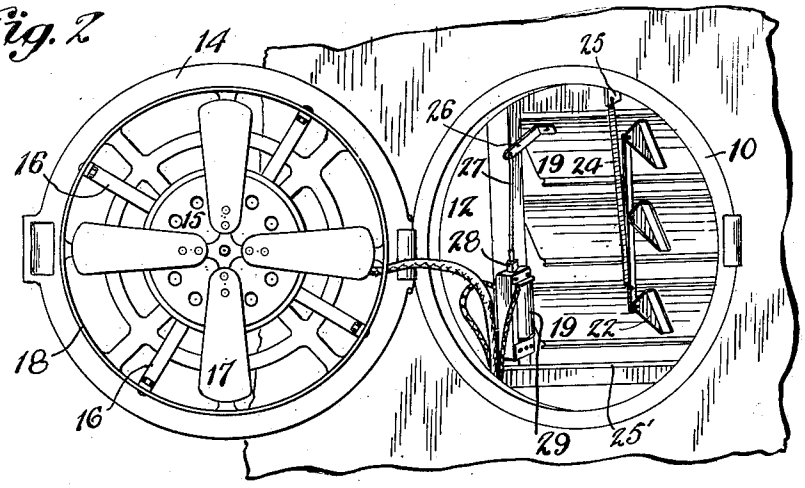

Walter A. Spear
Inventor

By Wm. L. Symmes
Attorney

Patented Feb. 17, 1931 1,792,514

UNITED STATES PATENT OFFICE

WALTER ARTHUR SPEAR, OF CINCINNATI, OHIO, ASSIGNOR TO THE CINCINNATI VICTOR COMPANY, OF CINCINNATI, OHIO

VENTILATING FAN

Application filed May 11, 1929. Serial No. 362,318.

My invention relates to ventilating fans of the type adapted for location in the walls of buildings or the like.

An important object of my invention is the provision of a fan apparatus which is applicable to walls of various thicknesses.

Another object of my invention is to provide a fan apparatus which is efficient and economical and which is ornamental and readily accessible for cleaning, repairs or the like.

Other objects and advantages of my invention will be apparent during the course of the following description.

In the accompanying drawings, which form a part of this specification, and wherein like characters of reference denote like or corresponding parts throughout the same,

Figure 1 is a vertical sectional view of my improved fan apparatus.

Figure 2 is a perspective view thereof, the grille being shown in open position, and,

Figure 3 is a diagrammatic illustration of the electrical apparatus used, and their connecting circuits.

In the drawing wherein for the purpose of illustration is shown a preferred embodiment of my invention, the numeral 10 designates an inner ring or frame member connected to an outer frame 11 by means of a pair of telescoping casing sections 12. Suitable openings are arranged in the sections 12 and bolts 13 extend through the openings to secure the sections in the desired position. With this construction the casing sections can be adjusted to fit walls of varying thicknesses.

A cover or grille 14 is hinged to the inner ring 10 at one side thereof. The fan motor 15 is supported on the interior of the grille 14 by means of brackets or arms 16 which are bolted to the rim of the grille. The fan 17 is arranged within the telescoping casing 12 and is preferably surrounded by a cylindrical sleeve 18 which is supported by the grille and secured in place by the bolts fastening the arms 16 to the grille. The grille is preferably ornamental in appearance and is dished to receive the fan motor, as shown in Figure 1. When the grille is swung open, as in Figure 2, the fan and motor move with it, and are consequently accessible for inspection, cleaning, or the like.

The outer frame 11 is provided with a generally rectangular opening in which a series of shutter blades 19 are hung on suitable horizontally arranged pintles 20. The upper ends of the shutters 19 engage the pintles and their lower ends are formed to provide depressions or grooves 21 to fit over the next lower pintle. The shutter blades, when closed, completely close the opening in the frame 11 and because of their overlapping relation, completely exclude the elements from the interior of the casing.

Each of the shutter blades is provided on its inner side with an angular extension 22 which projects inwardly a substantial distance from the shutter blades. The inner ends of the extensions or arms 22 are pivotally connected to a substantially vertically arranged connecting link 23. This arrangement is such that movement of one shutter blade about its pintle will cause simultaneous movement of the other blades. A coil spring 24 connects the link 23 with a lug 25 at the top of the casing and resists downward movement of the link 23. Outward movement of the shutters 22 moves the link downwardly against the tension of the spring 24, and when the shutters are released, they will be returned by the spring to their closed position.

A drip pan 25′ is secured to the lower end of the frame 11, interiorly thereof, and is inclined to carry any moisture out of the casing.

An interiorly projecting arm 26 is secured to the upper shutter blade and is connected by a rod 27 to the central core member 28 of a solenoid 29. The solenoid is fastened to the side of the frame 11, interiorly thereof. This solenoid is of the closed core type, and is provided with an encircling core member 30, preferably of laminated steel. The solenoid is connected in shunt to the fan motor as shown in Figure 3, and the fan motor and solenoid are energized simultaneously when the switch 31 is closed. When the solenoid is energized, the shutter blades 22 are swung outwardly by reason of the downward pull on the arm 26 and maintained in that position, as shown in Figure 1, during the entire time that

the fan is in operation. When the fan is stopped by the switch 31, the solenoid coil is deenergized and the shutters are returned to their closed position by the coil spring 24.

The solenoid has a practically complete laminated steel magnetic circuit when the plunger or removable core member is down and the shutters are open for operating conditions. When the current is off and the plunger 28 is up, there is an air gap 32 between the lower end of the plunger and the rest of the core. When the current is turned on, due to this relatively large air gap, the flux density in the magnetic circuit is low and, therefore, the counter E. M. F. is small, allowing a surge of current which pulls down the plunger. When the plunger goes home, the air gap is closed, and the magnetic field is completed in steel pulling up a high flux density throughout the magnetic circuit, and generating a strong counter E. M. F. This counter E. M. F. bucks the voltage of the line and reduces the current to a very small value.

As the solenoid is energized during the entire time that the fan is in operation, a large amount of current would ordinarily be used, but with the choke coil solenoid, as soon as the plunger is down and the air gap is closed, only a negligible amount of current is consumed by the solenoid.

While I have shown and described the preferred embodiment of my invention, it is to be understood that various changes in the size, shape and arrangement of parts may be resorted to without departing from the spirit of my invention or the scope of the subjoined claims.

Having thus described my invention what I claim and desire to protect by Letters Patent is:

1. In a ventilating apparatus, the combination with a casing, of a series of shutter blades pivoted in one end of the casing, a grille hinged to the other end of the casing, and a fan mounted in said grille and moving therewith.

2. In a ventilating apparatus, the combination with a casing, of a pair of frames secured one to each end of said casing, a series of shutter vanes pivotally mounted in one of said frames, means for opening and closing said vanes, a grille hinged to the other frame and adapted to swing away from said casing, and a fan mounted in said hinged grille and adapted to move therewith.

3. In a ventilating apparatus, a casing, a series of shutter vanes hinged at one end of said casing, a grille hinged to the other end of said casing, a fan rigidly mounted in said hinged grille, and a sleeve carried by said grille and surrounding said fan.

4. A ventilating apparatus comprising a casing, a series of shutters pivotally arranged in one end of said casing, means for opening and closing said shutters, a dished grille hinged to the other end of said casing, and a fan rigidly mounted in the dished portion of said grille.

5. A ventilating apparatus comprising a casing, a series of shutter blades pivotally arranged in one end of said casing, means for opening and closing said shutter blades, a dished grille hinged to the other end of said casing, a fan rigidly mounted in the dished portion of said grille, and a cylindrical sleeve carried by said grille and surrounding said fan.

6. A ventilating apparatus comprising a casing, said casing being composed of a pair of telescoping sections, means to secure said casing sections in position against relative displacement, a frame secured to the end of one of said casing sections, a series of shutter vanes pivotally mounted in the frame, means for opening and closing said shutter vanes, a frame secured to the end of the other casing section, a dished grille hinged to said last named frame, and a fan rigidly mounted in the dished portion of the grille.

7. A ventilating apparatus comprising a casing composed of telescoping sections, means to secure said casing sections against relative movement, a frame secured to the end of one of said sections and having an opening therein, a series of shutter vanes pivotally mounted in said opening, means for opening and closing said shutter vanes, an inclined drip pan arranged within said casing and secured to said frame adjacent the lower end of the opening therein, a frame secured to the end of the other casing section, a dished grille hinged thereto, and a fan mounted in the dished portion of said hinged grille.

In testimony whereof I hereby affix my signature.

WALTER ARTHUR SPEAR.