US00D910941S

(12) **United States Design Patent**
McIntyre, II et al.

(10) **Patent No.: US D910,941 S**
(45) **Date of Patent: ** Feb. 16, 2021**

(54) **EQUIPMENT COWLING**

(71) Applicant: **Maverick Surface Preparations, LLC**, New Iberia, LA (US)

(72) Inventors: **Ted Lee McIntyre, II**, New Iberia, LA (US); **Keefe Jude Duhon**, New Iberia, LA (US)

(73) Assignee: **Maverick Surface Preparations, LLC**, New Iberia, LA (US)

(**) Term: **15 Years**

(21) Appl. No.: **29/676,362**

(22) Filed: **Jan. 10, 2019**

(51) **LOC (13) Cl.** **15-05**

(52) **U.S. Cl.**
USPC **D32/15**

(58) **Field of Classification Search**
USPC D32/2–3, 5–7, 12–13, 15–16, 25–29
CPC A47L 15/42; A47L 15/00; B65D 47/06; D06F 23/06; D06F 37/26
See application file for complete search history.

(56) **References Cited**

U.S. PATENT DOCUMENTS

D332,158 S * 12/1992 Bothun D32/15
D338,292 S * 8/1993 Schmitz D32/21
D365,423 S * 12/1995 Bores D32/16
D382,383 S * 8/1997 Knowlton D32/16
D391,699 S * 3/1998 Creecy D32/16
D525,000 S * 7/2006 Williams D32/15
D536,146 S * 1/2007 Pedlar D32/16
D536,844 S * 2/2007 Pedlar D32/16
D536,846 S * 2/2007 Pedlar D32/16
D549,405 S * 8/2007 Dammkoehler D32/16
D569,057 S * 5/2008 Goff D32/16
D571,512 S * 6/2008 Dammkoehler D32/15
D661,853 S * 6/2012 Dammkoehler D32/16
D694,969 S * 12/2013 Dammkoehler D32/16
D734,573 S * 7/2015 Dammkoehler D32/16
D756,576 S * 5/2016 Wang D32/15
(Continued)

FOREIGN PATENT DOCUMENTS

CN 304588893 * 4/2018

OTHER PUBLICATIONS

Floor Care Machines | Global Industrial website 2020, https://www.globalindustrial.com/...r-20-cleaning-path-corded?infoParam.campaignId=T9F&gclid=EAIaIQobChMI-uq35_fx6QIVg-DICh04MQ3wEAQYAiABEgJYYvD_BwE, site visited Jun. 8, 2020.*
(Continued)

Primary Examiner — John R Yeh
(74) *Attorney, Agent, or Firm* — Young Basile Hanlon & MacFarlane, P.C.

(57) **CLAIM**

The design for an equipment cowling, as shown and described.

DESCRIPTION

FIG. **1** is a front, left perspective view for an equipment cowling showing our new design;
FIG. **2** is a rear, left perspective view thereof;
FIG. **3** is a front perspective view thereof;
FIG. **4** is a rear perspective view thereof;
FIG. **5** is a right side perspective view thereof;
FIG. **6** is a left side perspective view thereof;
FIG. **7** is a cutaway elevated rear perspective view thereof;
FIG. **8** is an elevated front perspective view thereof;
FIG. **9** is a rear, bottom perspective view thereof; and,
FIG. **10** is a cutaway front, bottom perspective view thereof.
The dot-dash lines in FIGS. **7** and **10** illustrate cutaway symbols that form no part of the claimed design. All other broken lines illustrate portions of the equipment cowling that form no part of the claimed design.

1 Claim, 10 Drawing Sheets

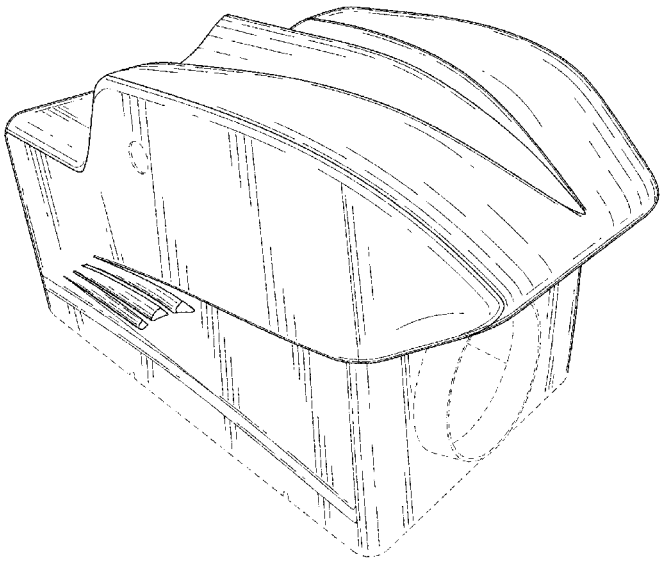

(56) **References Cited**

U.S. PATENT DOCUMENTS

D783,910	S	*	4/2017	Casalgrandi	D32/15
D785,254	S	*	4/2017	Dammkoehler	D32/16
2008/0276414	A1	*	11/2008	Wood	A46B 13/001 15/383
2014/0144467	A1	*	5/2014	Merz	A47L 11/302 134/6

OTHER PUBLICATIONS

Maverick Surface Preparations, "Gladiator—25"", Description, Technical Specifications, Accessories, www.mavericksurfacepreparations.com, Downloaded Dec. 13, 2018, on sale by Maverick Surface Preparations LLC in the year 2016 (3 pp).

Maverick Surface Preparations, Photographs of Gladiator/Reaper unit cover, on sale by Maverick Surface Preparations LLC in the year 2016 (5 pp).

* cited by examiner

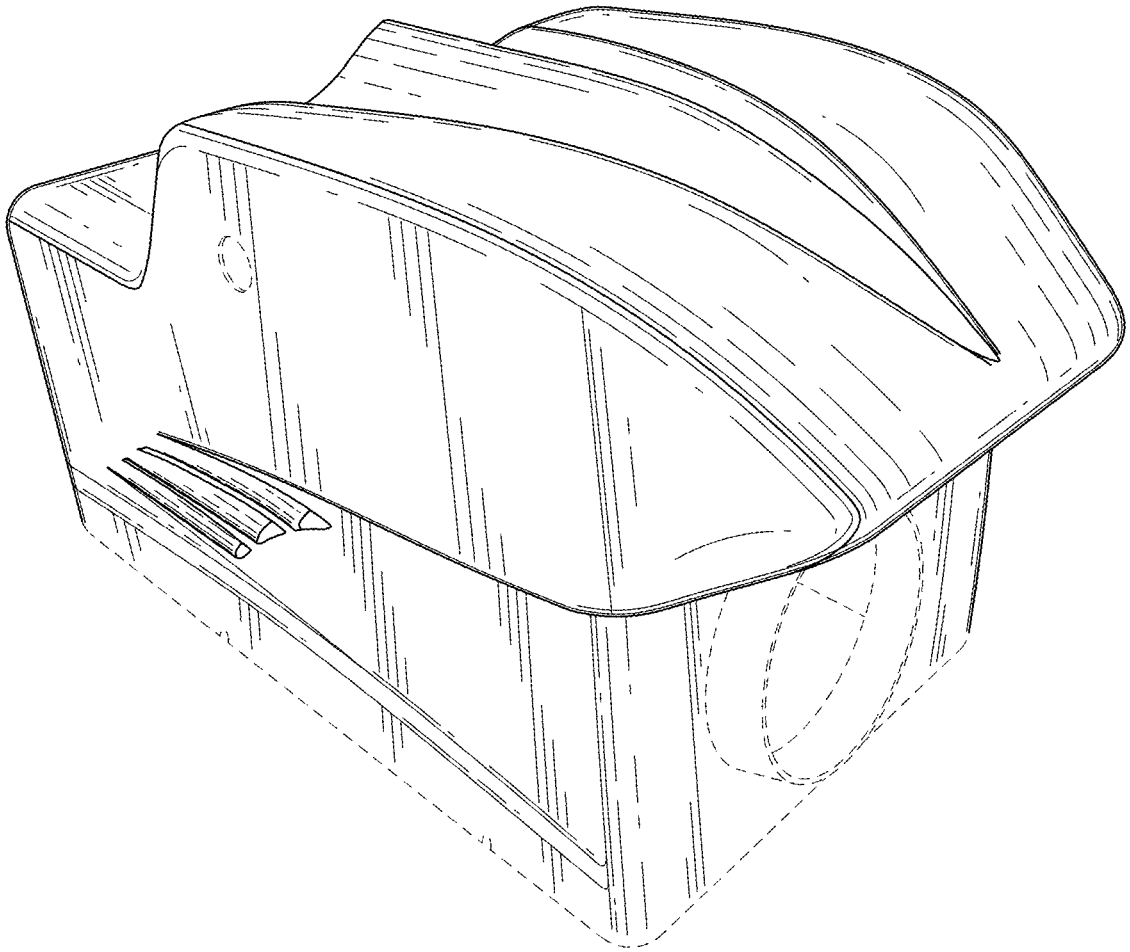

FIG. 1

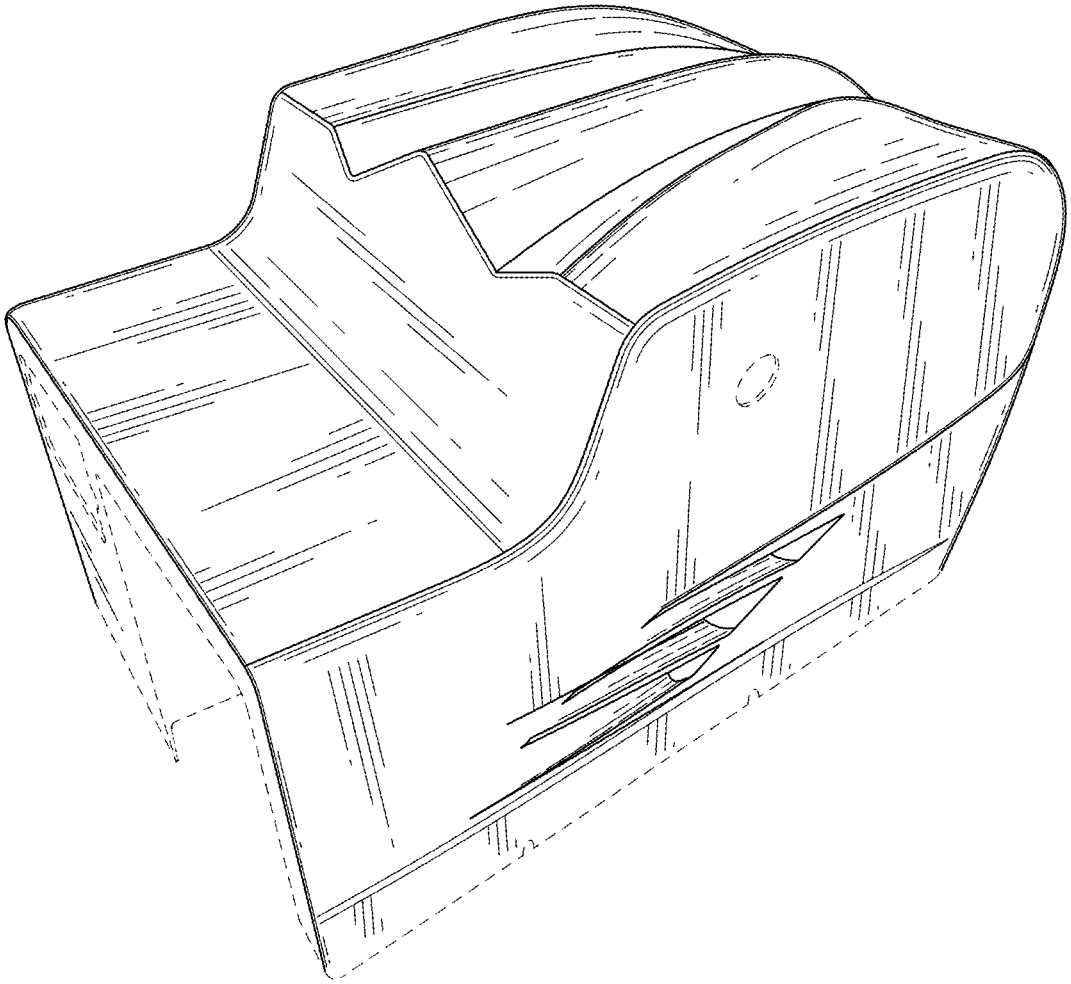

FIG. 2

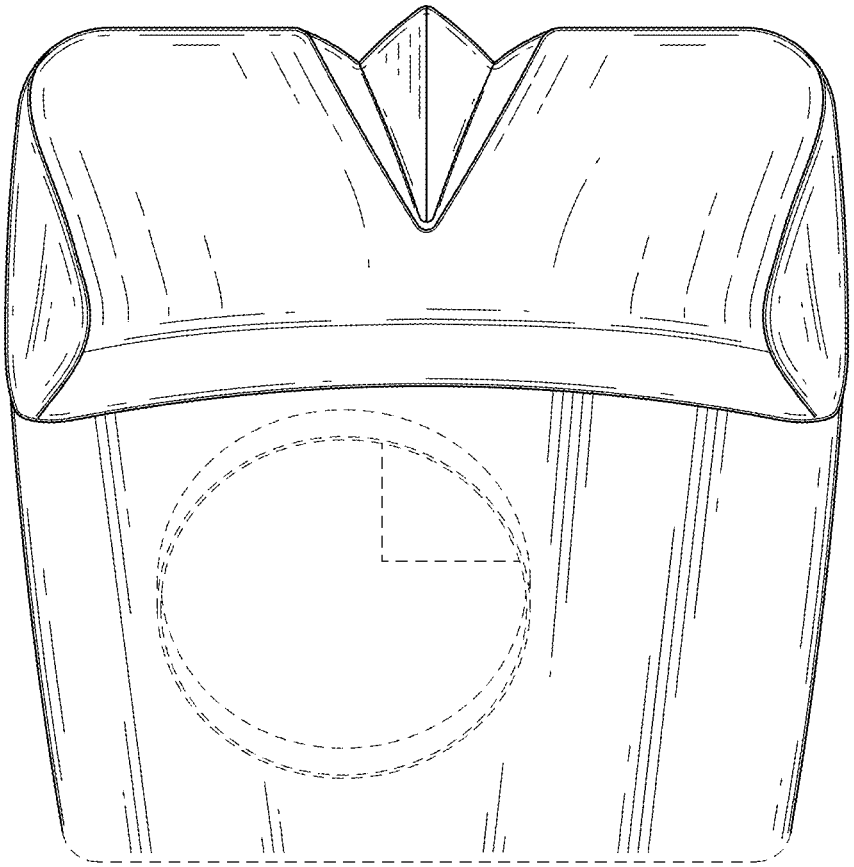

FIG. 3

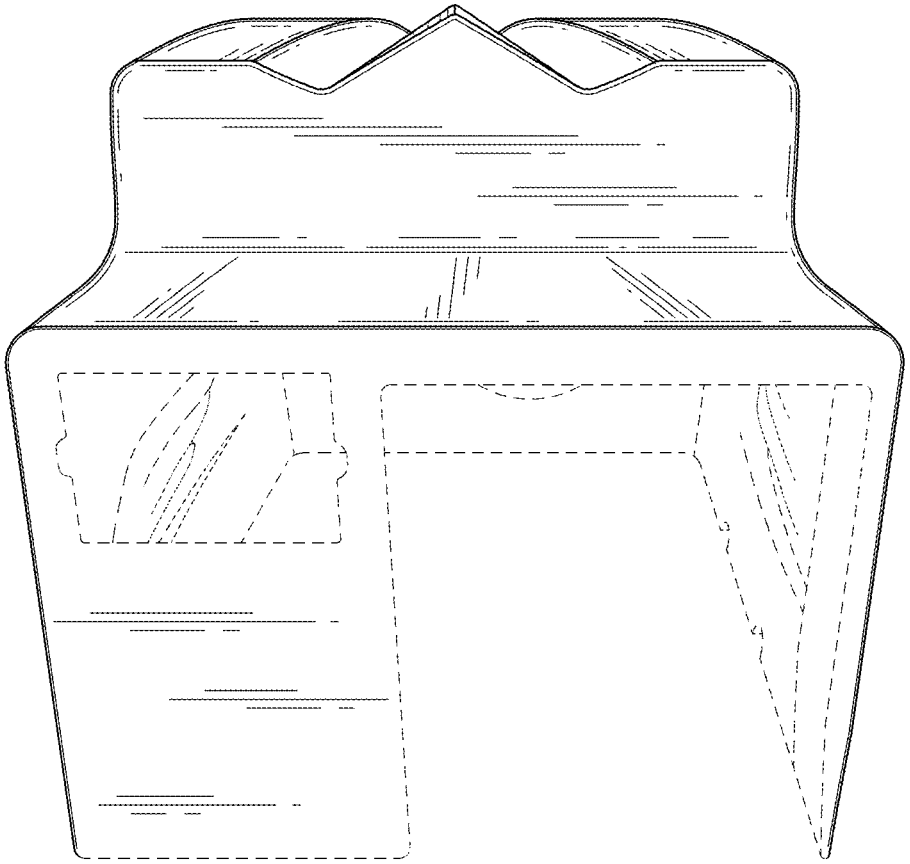

FIG. 4

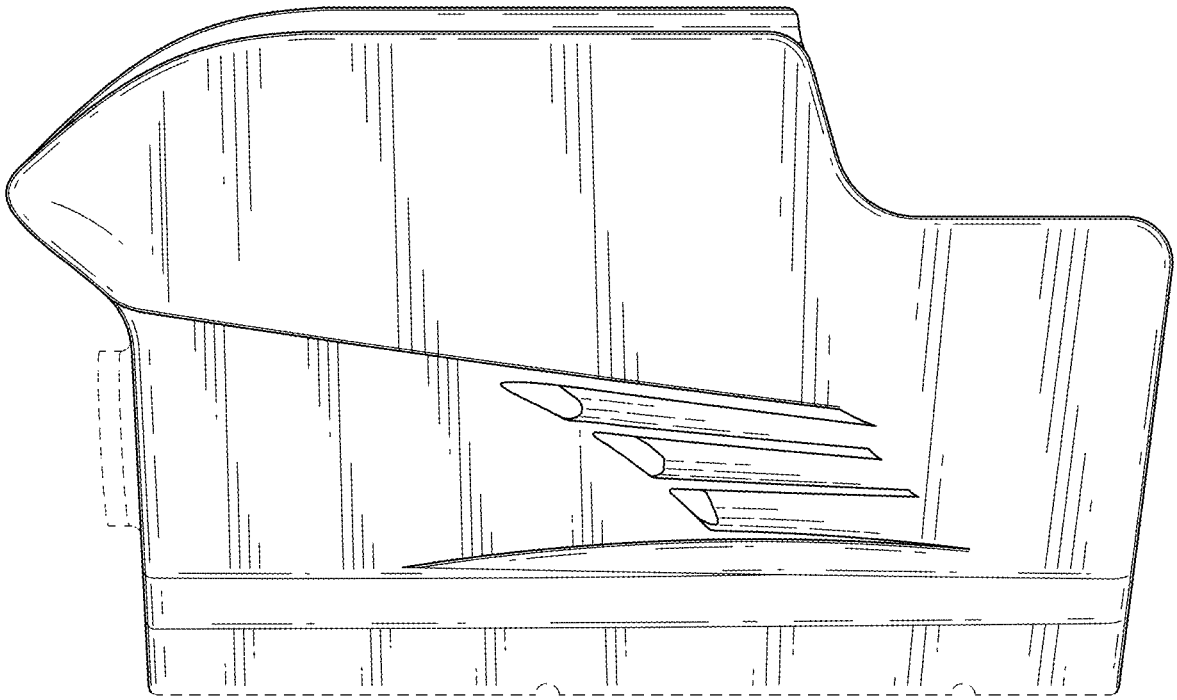

FIG. 5

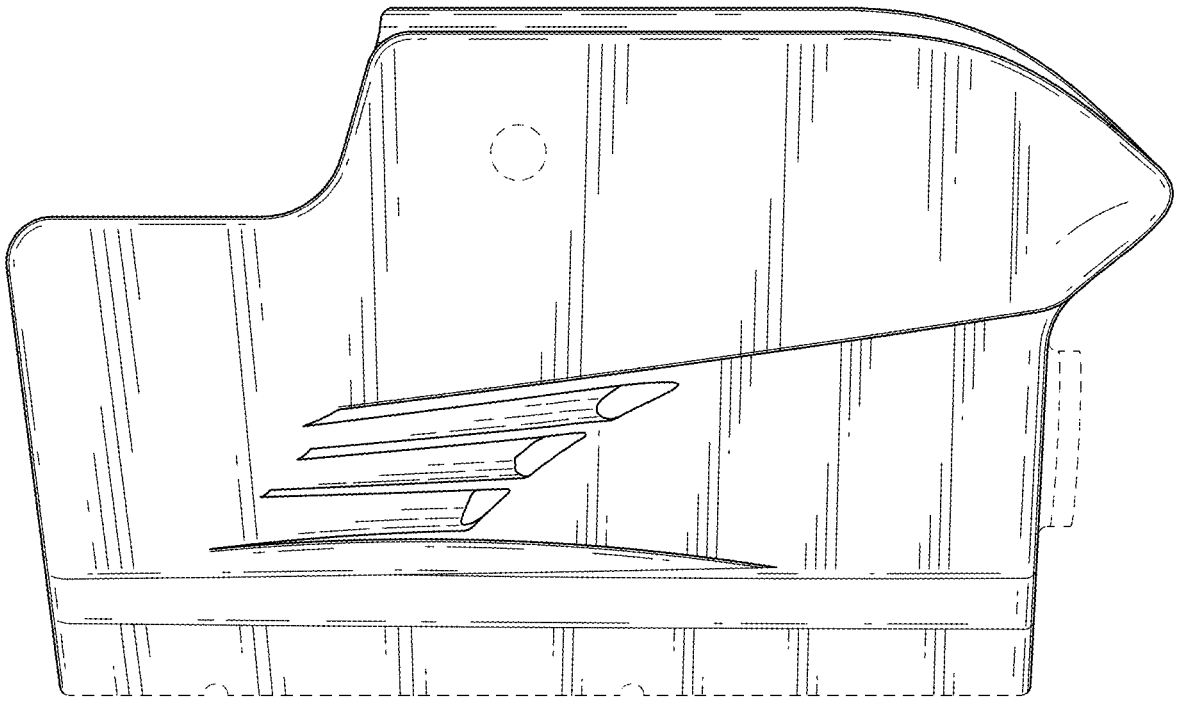

FIG. 6

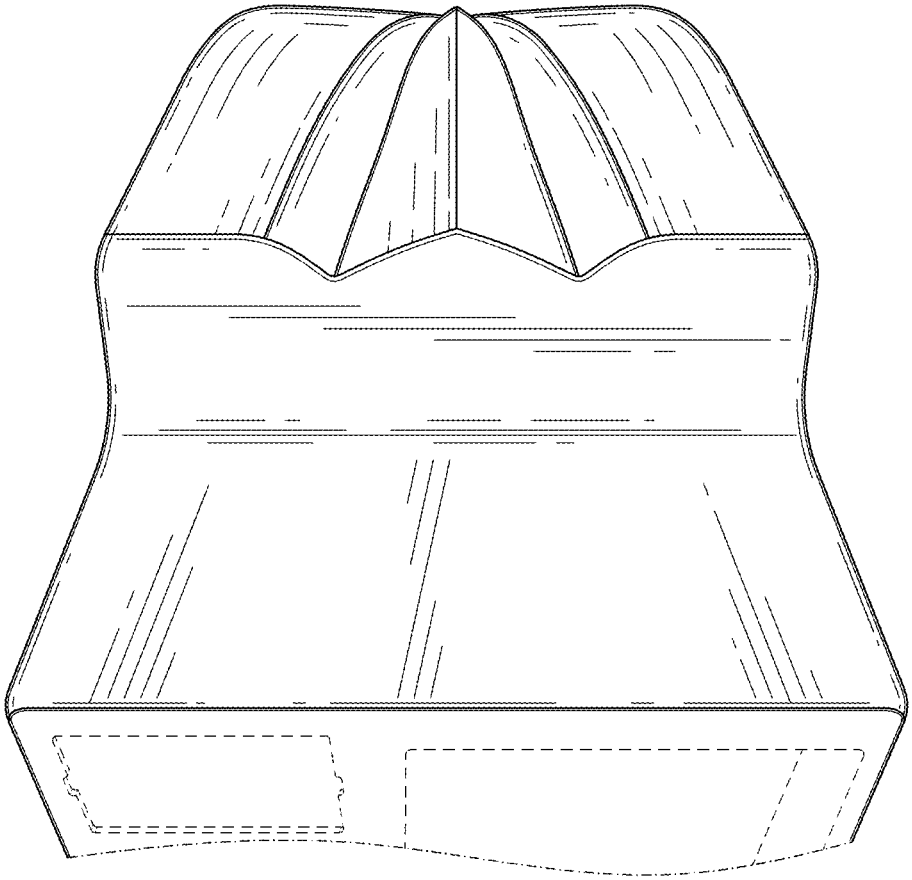

FIG. 7

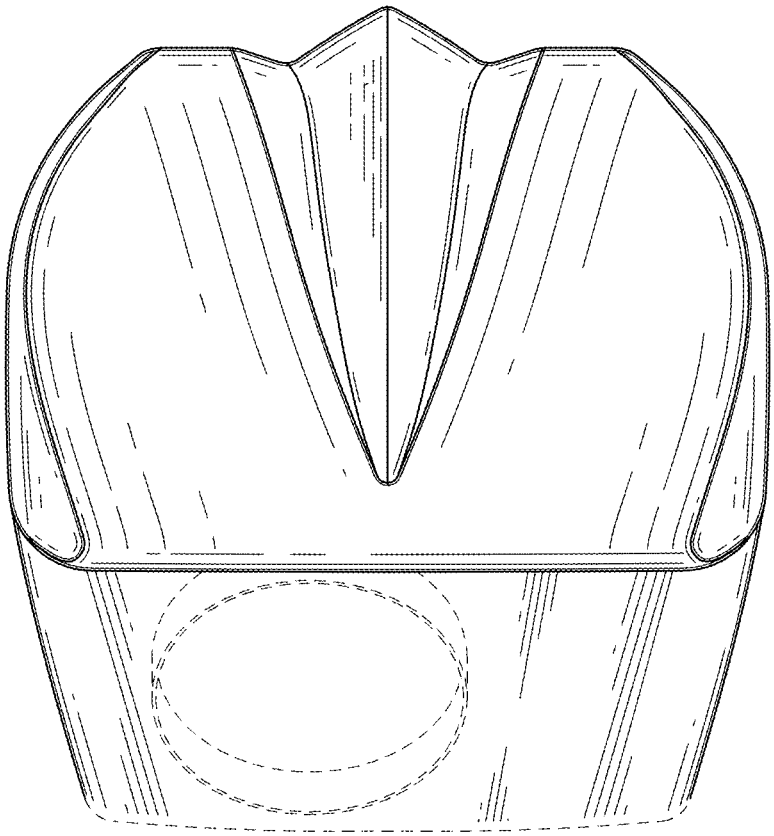

FIG. 8

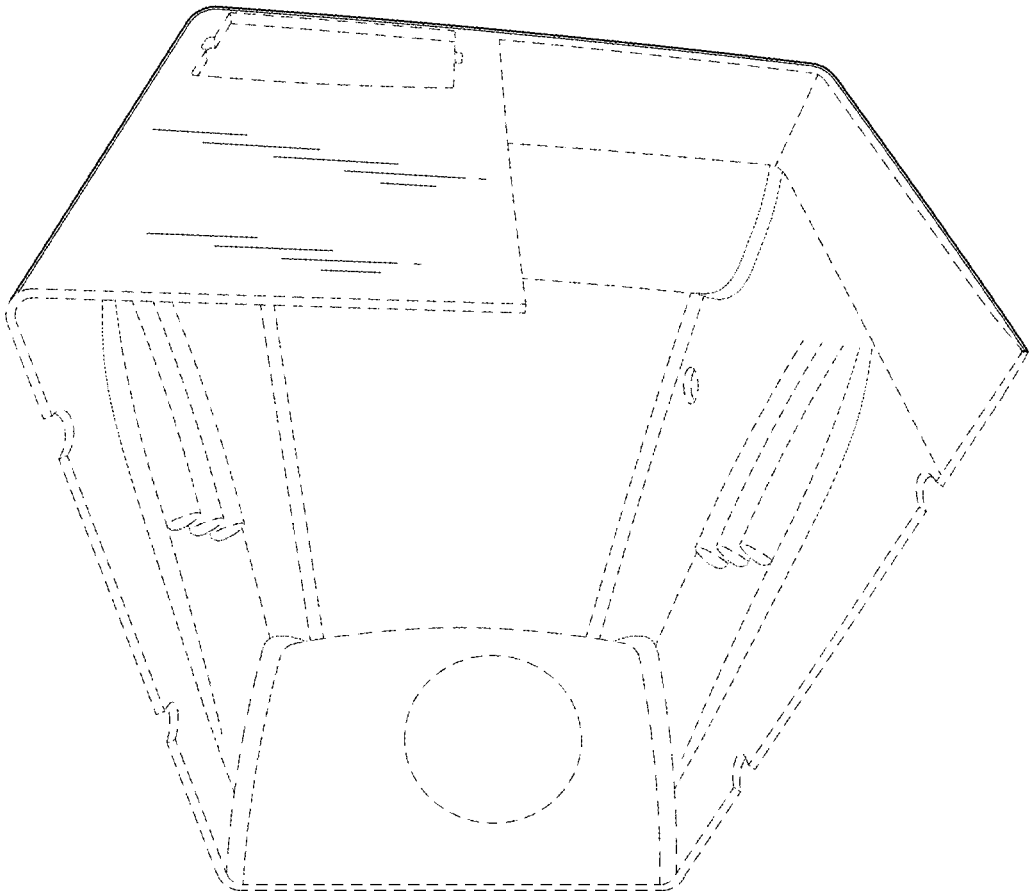

FIG. 9

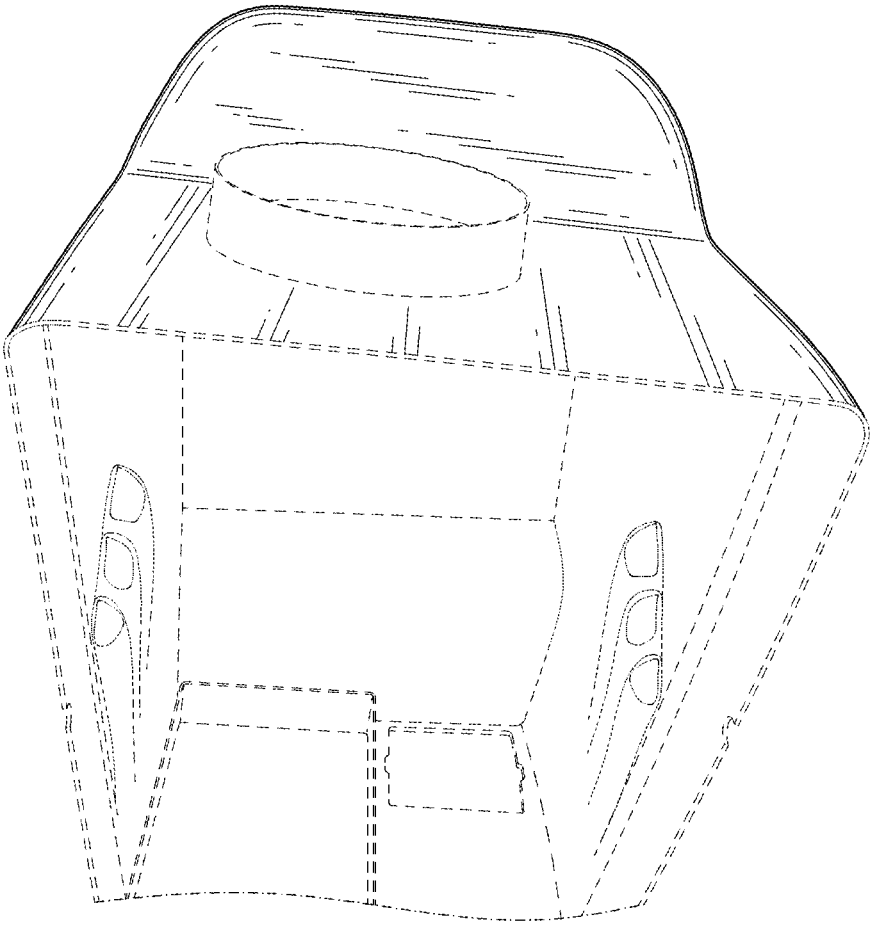

FIG. 10