April 22, 1930. H. A. JANACEK 1,755,507

COTTON PICKER MACHINE

Filed Dec. 8, 1928 5 Sheets-Sheet 1

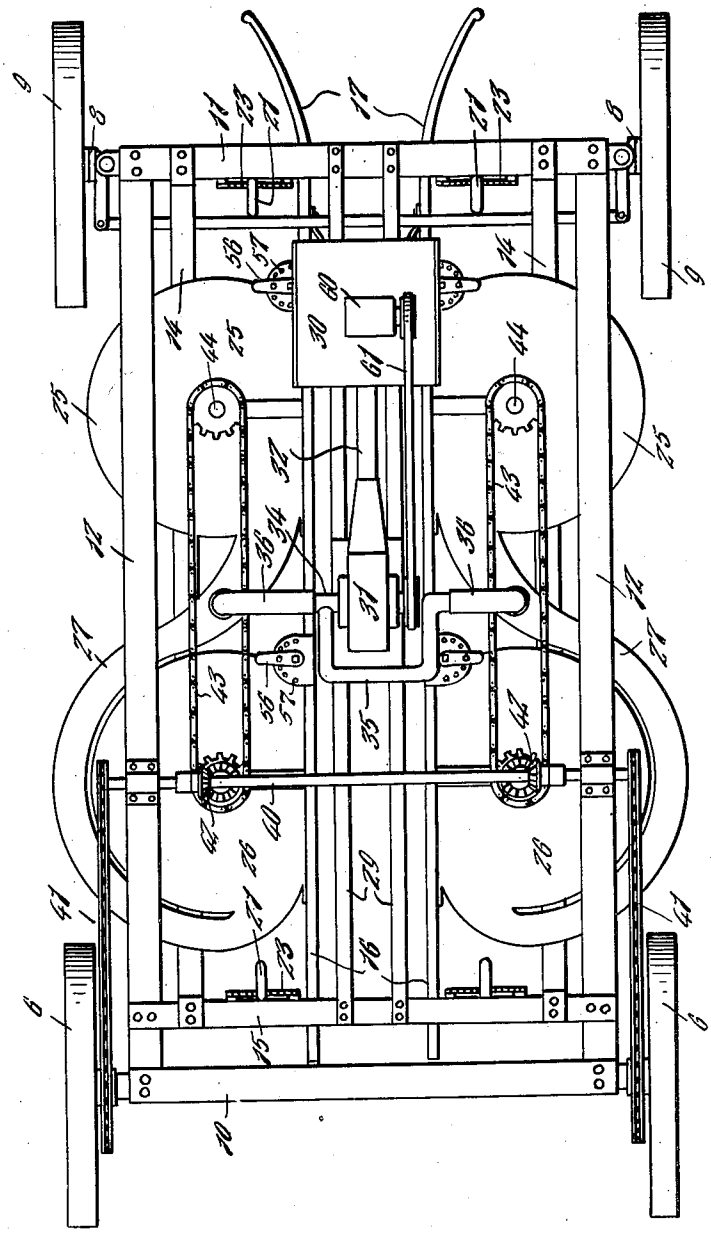

Fig. 1.

Inventor

H. A. Janacek

By Clarence A. O'Brien

Attorney

April 22, 1930. H. A. JANACEK 1,755,507

COTTON PICKER MACHINE

Filed Dec. 8, 1928 5 Sheets-Sheet 2

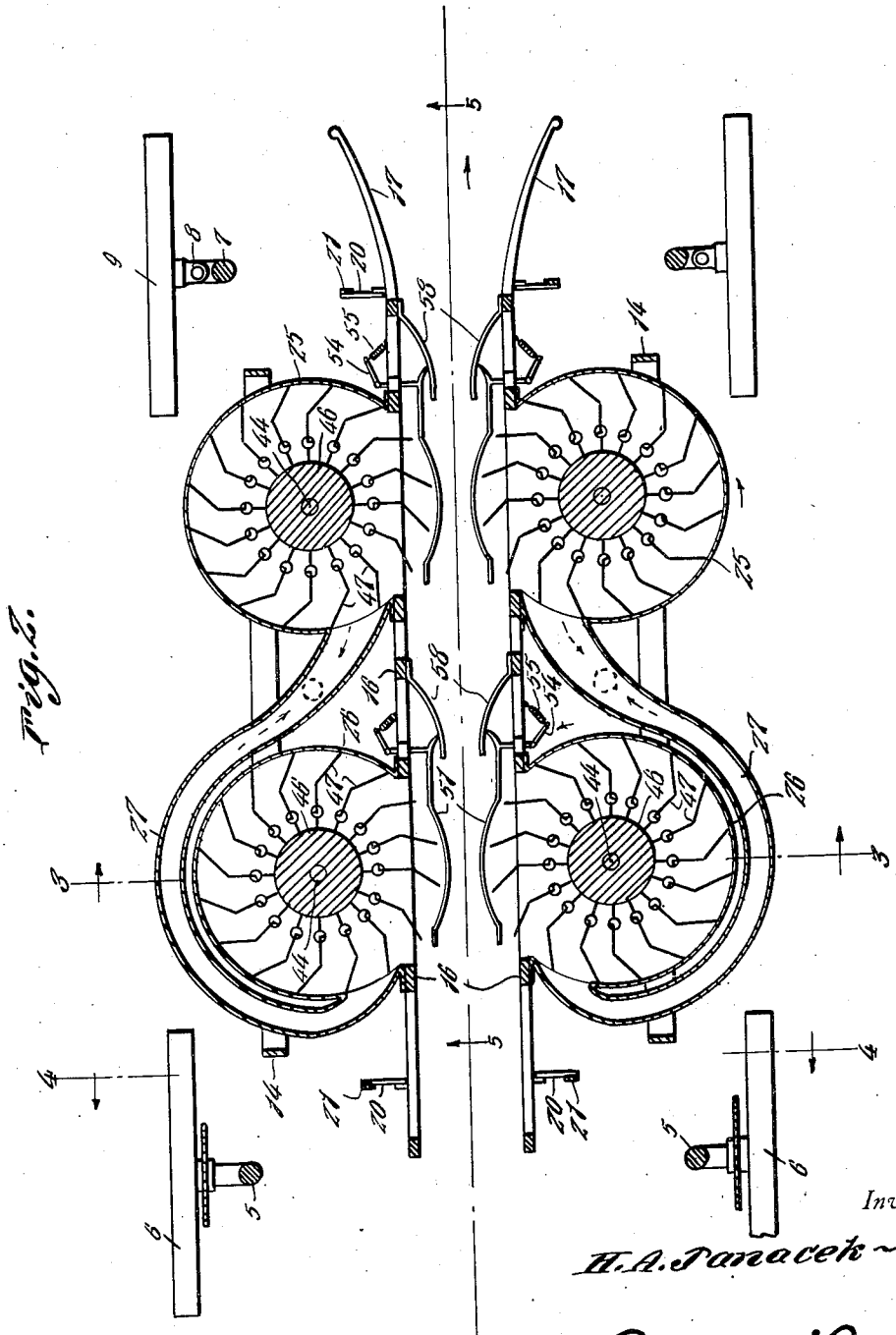

Inventor

H. A. Janacek

By Clarence A. O'Brien

Attorney

April 22, 1930. H. A. JANACEK 1,755,507

COTTON PICKER MACHINE

Filed Dec. 8, 1928 5 Sheets-Sheet 3

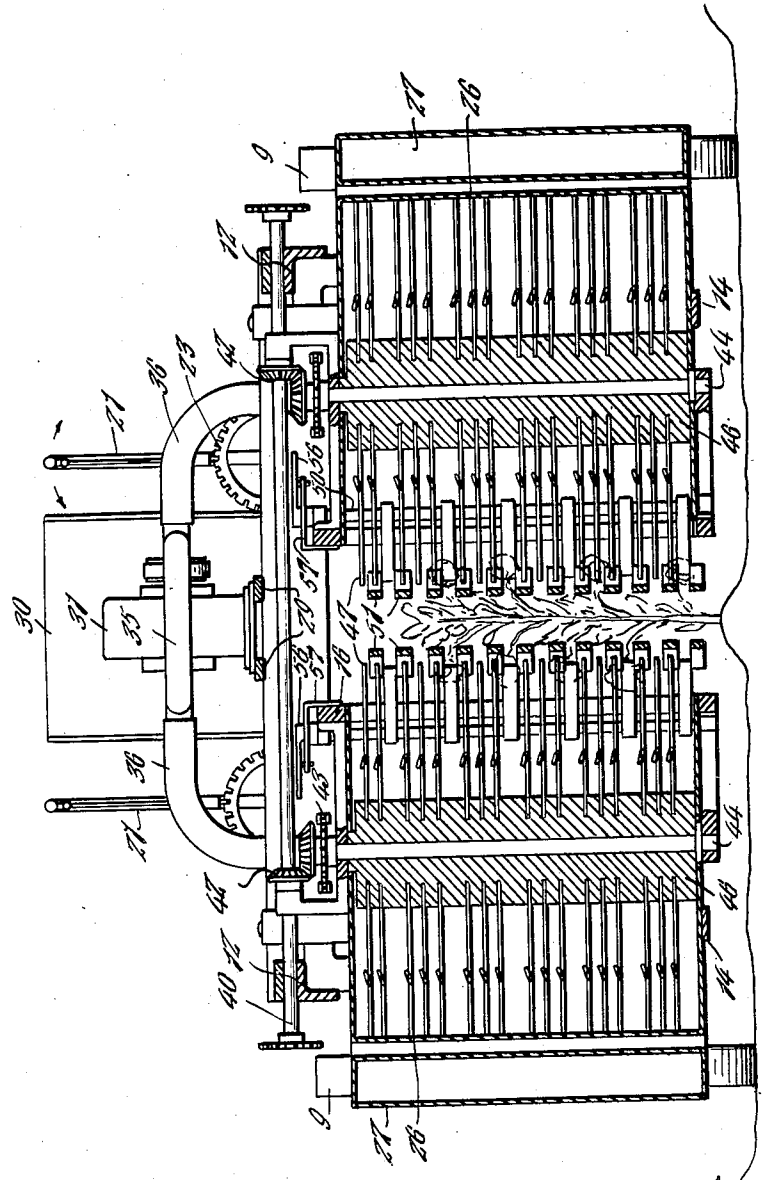

Fig. 3.



Fig. 4.

Inventor

H. A. Janacek

By Clarence A. O'Brien

Attorney

April 22, 1930. H. A. JANACEK 1,755,507

COTTON PICKER MACHINE

Filed Dec. 8, 1928 5 Sheets-Sheet 4

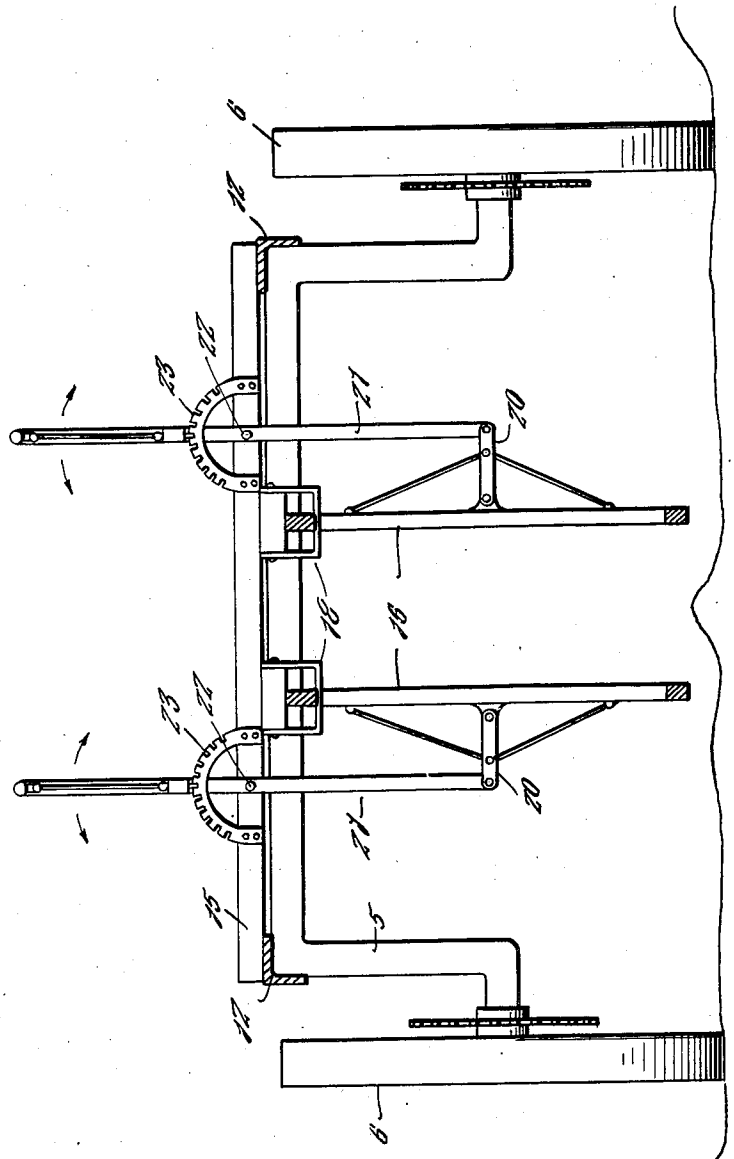

Fig. 3.



Fig. 4.

Inventor

H. A. Janacek

By Clarence A. O'Brien

Attorney

April 22, 1930. H. A. JANACEK 1,755,507

COTTON PICKER MACHINE

Filed Dec. 8, 1928 5 Sheets-Sheet 5

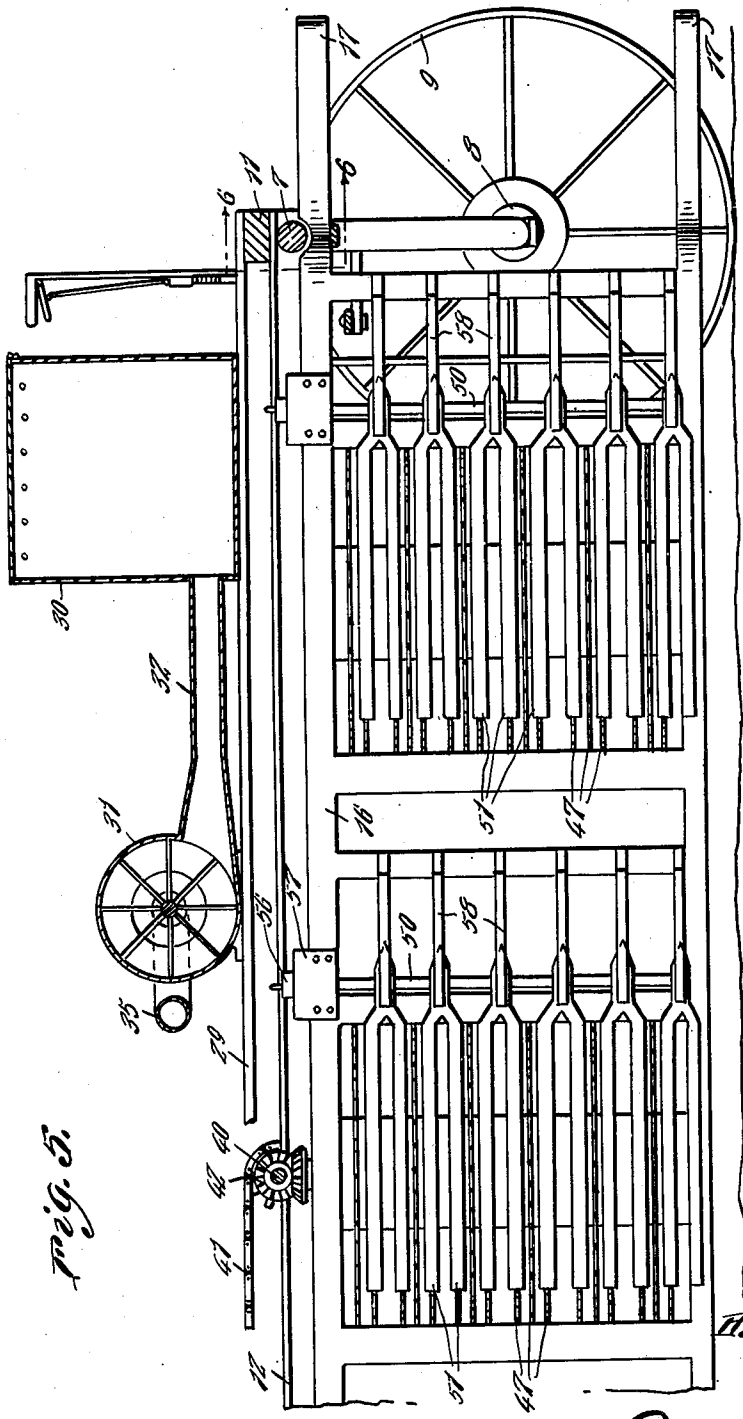

Fig. 5.

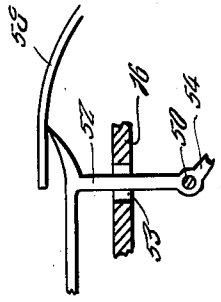

Fig. 7.

Inventor
H. A. Janacek

By Clarence A. O'Brien
Attorney

Patented Apr. 22, 1930 1,755,507

# UNITED STATES PATENT OFFICE

HENRY A. JANACEK, OF LA GRANGE, TEXAS

## COTTON-PICKER MACHINE

Application filed December 8, 1928. Serial No. 324,740.

The present invention relates to a cotton picking machine and has for its prime object to provide a machine with means therein for guiding a row of cotton plants to be engaged by picking fingers and further in the provision of suction means for taking the cotton from the fingers and delivering it into a receptacle.

Another very important object of the invention resides in the provision of a machine of this nature which is adjustable to accommodate the width of the row over which the machine is travelling.

A still further very important object of the invention resides in the provision of a machine of this nature which is comparatively simple in its construction, compact and convenient in its arrangement of parts, thoroughly efficient and reliable in its use and operation, not likely to easily become out of order and otherwise well adapted to the purpose for which it is designed.

With the above and numerous other objects in view as will appear as the description proceeds, the invention resides in novel features of construction, and in the combination and arrangement of parts as will be hereinafter more fully described and claimed.

In the drawings:

Figure 1 is a top plan view of the machine embodying the features of my invention,

Figure 2 is a horizontal section therethrough,

Figure 3 is a vertical transverse section taken substantially on the line 3—3 of Figure 2,

Figure 4 is a vertical transverse section taken substantially on the line 4—4 of Figure 2,

Figure 5 is a central vertical longitudinal section taken substantially on the line 5—5 of Figure 2,

Figure 6 is an enlarged detail section taken substantially on the line 6—6 of Figure 5,

Figure 7 is an enlarged detail section showing one of the finger guards and the spring finger associated therewith, and

Figure 8 is a perspective view of one of the brush bristles.

Referring to the drawing in detail it will be seen that the numeral 5 denotes an arched rear axle with wheels 6 journaled on the extremities thereof. The numeral 7 denotes a front arched axle with steering knuckles 8 mounted on the extremities thereof and having wheels 9 journaled thereon.

Riders 10 and 11 extend along the axles 5 and 7 respectively transversely of the machine and assists in holding in place angle iron side beams 12 on the upper corners of the axle. Saddles 14 extend rearwardly from the riser 11 to a rear transverse bar 15 fixed to the side bars 12 a short distance in front of the rear axle.

A pair of guide frames 16 extend longitudinally of the machine one to each side of the longitudinal center thereof and have their forward ends diverging forwardly away from each other as is indicated at 17.

The frames 16 are mounted in hangers 18 attached to the cross bar 15 and hangers 19 attached to the front axle. Links 20 are pivotally engaged with the rear portions of the guide frames 16 and these links are pivotally engaged with levers 21 rockable as at 22 on the cross bar 15 so that by rocking the levers the guide frames may be moved toward or away from each other and suitable means 23 are associated with the lever to hold them in different adjusted positions.

A casing 25 and the casing 26 is fixed to each guard frame 16 and extends laterally and outwardly therefrom. The casings 25 and 26 are substantially cylindrical in formation having their inner sides open as is clearly illustrated in Figure 2.

Conduits 27 extend from the rear of the casing 25 about the outer side of the casing 26 and communicate with the rear of said casing 26. Supporting bars 29 extend longitudinally along the center of the machine fixed to the rider 11 and the cross bar 15. These bars 28 support a receptacle 30 and a fan 31 the exhaust of which is connected to the receptacle through conduits 36.

The intake of the fan is denoted by the numeral 34 and has a branch 35. Pipes 36 are connected with the inlet 34 and the branch 35 and with the upper intermediate portions of the conduits 27. The casings 25 and 26

rest on the saddles 14 to slide thereon whenever the frames 16 are moved. A shaft 40 has chain and sprocket connections 41 with the rear wheel 6 and has a beveled gear drive connection 42 with chain and sprocket mechanism 43 between shafts 44 journaled vertically in the casings 25 and 26.

Inside these casings, on the shaft 44 are hubs 46 from which extend bristles 47 formed of wire or the like having a loop 48 intermediate their ends and their outer extremities angularly disposed as is indicated at 49.

On each frame 16 immediately to the front of the casing there is journaled a shaft 50 having fingers 51 secured thereto. These fingers 51 are bifurcated as is clearly illustrated in Figure 5 and are provided with lateral extensions 52 see Figure 7 attached to the shaft, the extension 52 projecting through slots 53 in the spring.

A crank arm 54 on each shaft is urged in one direction by a spring 55. A crank 56 on each shaft is used to rock the shaft to hold the fingers in different adjusted positions and suitable means 57 is associated with this crank to hold it in different adjusted positions against the tension of spring 55.

Finger guards 58 are mounted on the frame to extend rearwardly over the forward end of the fingers. The guide frames disposed one on each side of the row of cotton take up the stalks that are out of line and urge them to the center and then the finger guards keep the stalks away from the fingers while the fingers take only the open or closed cotton bolls, leaves and limbs.

When an opened boll passes between the fingers it is picked out by the bristles of the rotating brushes in the casing and the air from the pump takes the cotton off the bristles into the conduits 27 and through the fan into the casing 30. The fan is preferably operated from a motor 60 on the casing 30 with a belt and pulley drive 61 associated therewith and with the fan.

The guards may be adjusted closer to the stalks or away from the stalks as may be necessary for efficient operation.

It is thought that the construction, operation, utility and advantages of the invention will now be quite apparent to those skilled in this art without a more detailed description thereof.

The present embodiment of the invention has been disclosed in considerable detail merely for the purposes of exemplification since in actual practice it attains the features of advantage enumerated as desirable in the statement of the invention and the above description.

It will be apparent that changes in the details of construction, and in the combination and arrangement of parts may be resorted to without departing from the spirit or scope of the invention as hereinafter claimed or sacrificing any of its advantages.

Having thus described my invention, what I claim as new is:

1. In a cotton picking machine of the class described, a wheeled frame, a pair of guide frames longitudinally of the wheeled frame, means for supporting the guide frames and to permit lateral movement thereof, means for moving the frames laterally, casings supported by the frames and cotton picking means in the casing.

2. In a cotton picking machine of the class described, a wheeled frame, a pair of guide frames longitudinally of the wheeled frame, means for supporting the guide frames and to permit lateral movement thereof, means for moving the frames laterally, casings supported by the frames, picker brushes rotatably mounted in the casings.

3. In a cotton picking machine of the class described, a wheeled frame, a pair of guide frames longitudinally of the wheeled frame, means for supporting the guide frames and to permit lateral movement thereof, means for moving the frames laterally, casings supported by the frames, picker brushes rotatably mounted in the casing, means for operatively connecting the brushes with the wheels so as to actuate the brushes as the wheel frame moves.

4. In a cotton picking machine of the class described, a wheeled frame, a pair of guide frames longitudinally of the wheeled frame, means for supporting the guide frames and to permit lateral movement thereof, means for moving the frames laterally, casings supported by the frames, picker brushes rotatably mounted in the casing, means for operatively connecting the brushes with the wheels so as to actuate the brushes as the wheel frame moves, conduits connecting the casings, one conduit for the casings of each guide frame, a pump, means connecting the pump with the conduit.

5. In a cotton picking machine of the class described, a wheeled frame, a pair of guide frames longitudinally of the wheeled frame, means for supporting the guide frames and to permit lateral movement thereof, means for moving the frames laterally, casings supported by the frames, picker brushes rotatably mounted in the casing, means for operatively connecting the brushes with the wheels so as to actuate the brushes as the wheel frame moves, conduits connecting the casings, one conduit for the casings of each guide frame, a pump, means connecting the pump with the conduit, receptacles with which the pump is connected to which it delivers the cotton.

6. In a cotton picking machine of the class described, a wheeled frame, a pair of guide frames longitudinally of the wheeled frame, means for supporting the guide frames and to permit lateral movement thereof, means

for moving the frames laterally, casings supported by the frames and cotton picking means in the casings, a shaft for each casing journaled in the frame, fingers extending from the shaft and in operative relation to said cotton picking means.

7. In a cotton picking machine of the class described, a wheeled frame, a pair of guide frames longitudinally of the wheeled frame, means for supporting the guide frames and to permit lateral movement thereof, means for moving the frames laterally, casings supported by the frames, picker brushes rotatably mounted in the casing, means for operatively connecting the brushes with the wheels so as to actuate the brushes as the wheel frame moves, conduits connecting the casings, one conduit for the casings of each guide frame, a pump, means connecting the pump with the conduit, a plurality of shafts journaled vertically on the guide frame one forwardly of each casing, a plurality of fingers on each shaft projecting therefrom and in proximity to said brushes at one side of said brushes, and means for rocking the shaft to adjust the fingers in respect to the brushes.

8. In a cotton picking machine of the class described, a wheeled frame, a pair of guide frames longitudinally of the wheeled frame, means for supporting the guide frames and to permit lateral movement thereof, means for moving the frames laterally, casings supported by the frames, picker brushes rotatably mounted in the casing, means for operatively connecting the brushes with the wheels so as to actuate the brushes as the wheel frame moves, conduits connecting the casings, one conduit for the casings of each guide frame, a pump, means connecting the pump with the conduit, a plurality of shafts journaled vertically on the guide frame one forwardly of each casing, a plurality of fingers on each shaft projecting therefrom and in proximity to said brushes at one side of said brushes, and means for rocking the shafts to adjust the fingers in respect to the brushes, and finger guards on the guide frames projecting over the forward ends of the fingers.

In testimony whereof I affix my signature.

HENRY A. JANACEK.