April 5, 1966

J. L. BYERS ET AL

3,244,211

CARD HOLDER

Filed April 22, 1964

3 Sheets-Sheet 1

Fig. 1

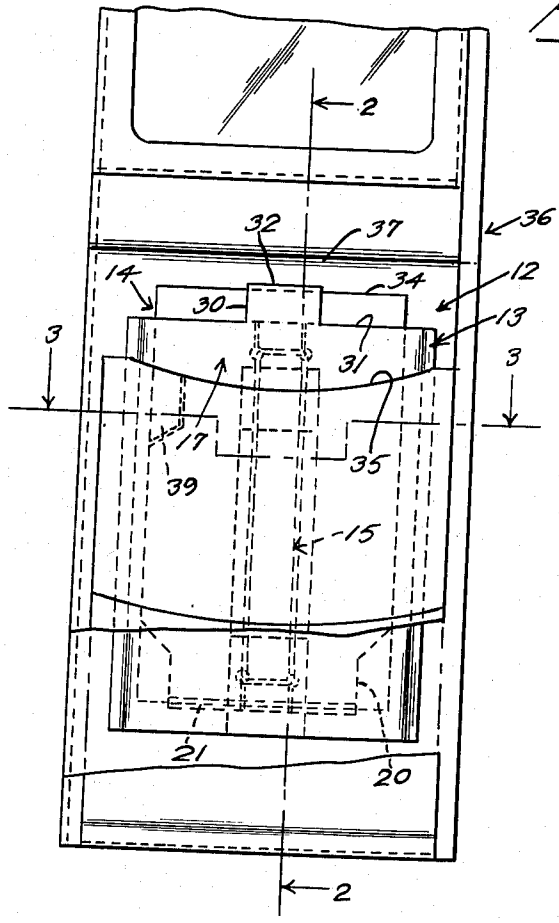

Fig. 2

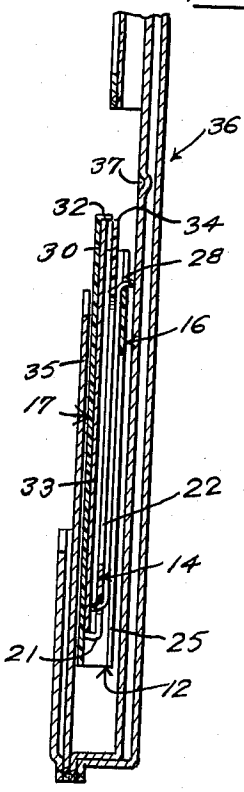

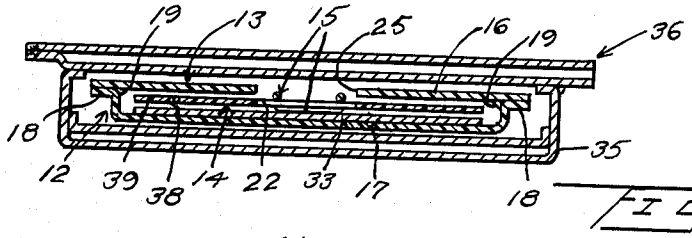

Fig. 3

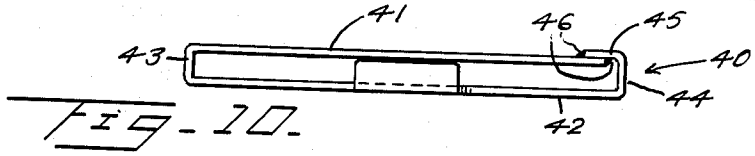

Fig. 10

INVENTORS

J. L. BYERS

B. J. BYERS

BY John N. Randolph

ATTORNEY

April 5, 1966 J. L. BYERS ET AL 3,244,211

CARD HOLDER

Filed April 22, 1964 3 Sheets-Sheet 2

FIG. 4

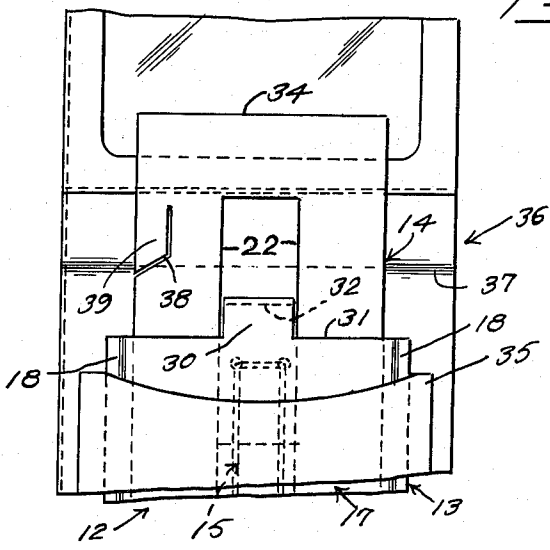

FIG. 5

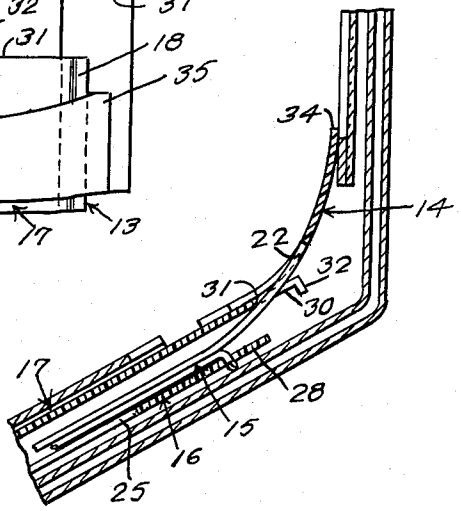

FIG. 6

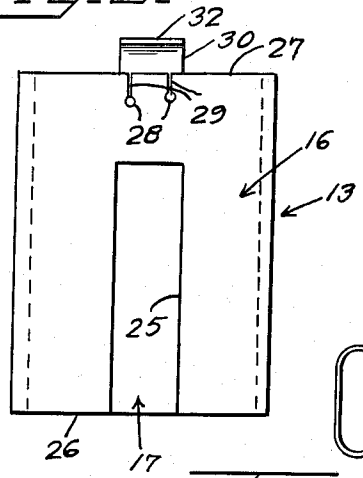

FIG. 7

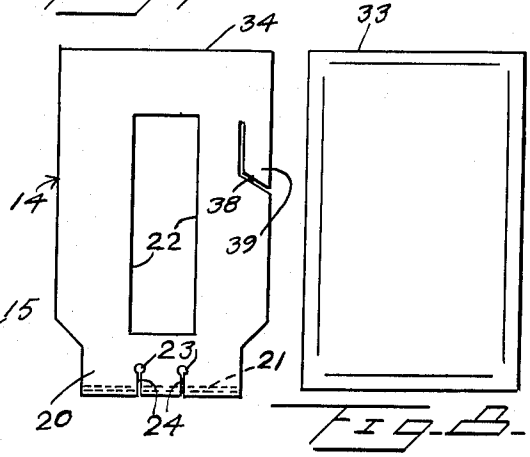

FIG. 8

FIG. 9

INVENTORS
J. L. BYERS
B. J. BYERS

BY John M. Randolph
ATTORNEY

April 5, 1966 J. L. BYERS ET AL 3,244,211

CARD HOLDER

Filed April 22, 1964 3 Sheets-Sheet 3

Fig. 11

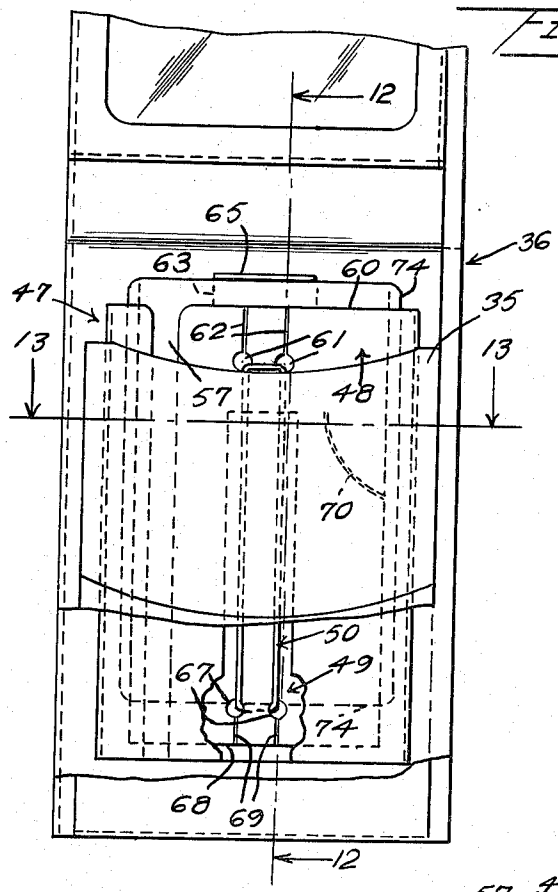

Fig. 12

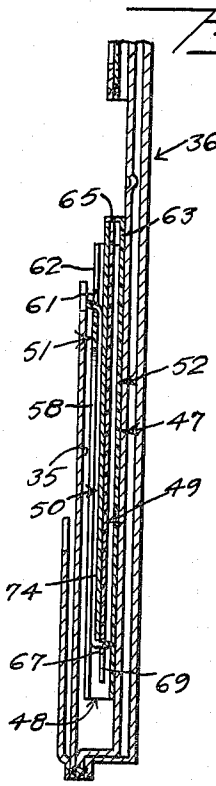

Fig. 13

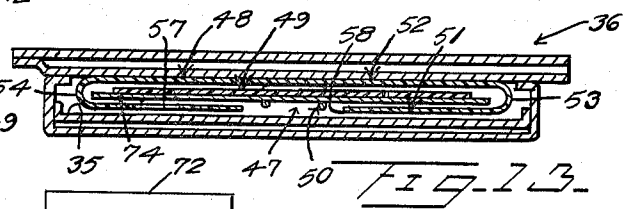

Fig. 14

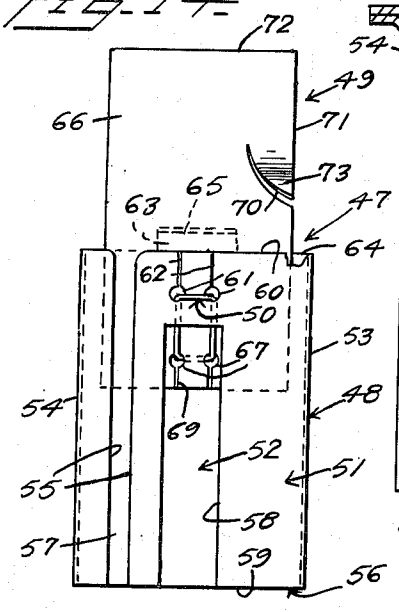

Fig. 15

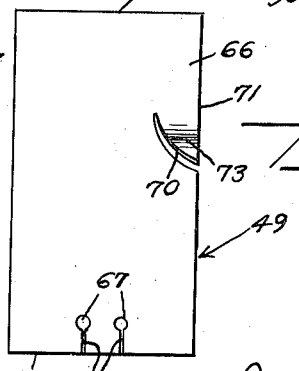

INVENTORS
J. L. BYERS
B. J. BYERS
BY John N. Randolph
ATTORNEY

United States Patent Office 3,244,211 Patented Apr. 5, 1966

3,244,211

CARD HOLDER

James L. Byers and Brian J. Byers, both of Rte. 2, Box 18, Grand Prairie, Tex.

Filed Apr. 22, 1964, Ser. No. 361,738
8 Claims. (Cl. 150—39)

This invention relates to a novel card holder adapted for use with a conventional wallet or billfold and which is primarily intended as a holder for a credit card or cards.

More particularly, it is an object of the present invention to provide a holder which will protect the credit card or cards contained therein, and from which the credit card or cards may be readily removed when the wallet or billfold is opened.

More specifically, the present invention provides a card holder from which a card or cards may be partially ejected automatically to facilitate removal thereof from the holder which remains applied to a pocket of the wallet or billfold.

A further object of the invention is to provide a holder including means for latching a part thereof in an extended position when the card or cards are removed therefrom, so that the billfold or wallet may not be closed by folding until the card or cards have been replaced in the holder.

A further object of the invention is to provide a card holder of extremely simple construction which may be very economically manufactured, which may be conveniently contained in a pocket of a conventional billfold or wallet, which is not bulky, and which is capable of functioning efficiently for accomplishing its intended purposes.

Various other objects and advantages of the invention will hereinafter become more fully apparent from the following description of the drawings, illustrating presently preferred embodiments thereof, and wherein:

FIGURE 1 is a fragmentary plan view, partly broken away, showing the card holder applied to a pocket of a conventional wallet or billfold;

FIGURE 2 is a longitudinal sectional view taken substantially along a plane as indicated by the line 2—2 of FIGURE 1;

FIGURE 3 is an enlarged cross sectional view taken substantially along a plane as indicated by the line 3—3 of FIGURE 1;

FIGURE 4 is a fragmentary view, similar to FIGURE 1, showing the card holder extended with the card or cards removed therefrom;

FIGURE 5 is a longitudinal sectional view of the parts shown in FIGURE 4 but illustrating another position of one part of the card holder;

FIGURE 6 is a plan view looking toward the underside of the sheath of the card holder;

FIGURE 7 is a plan view looking toward the underside of the card supporting slide of the card holder;

FIGURE 8 is a plan view of a card to be applied to the card holder;

FIGURE 9 is a plan or elevational view of the elastic card and slide ejecting element of the holder;

FIGURE 10 is an end elevational view of a slightly modified form of the card holder sheath;

FIGURE 11 is a view corresponding to FIGURE 1 but illustrating another embodiment of the card holder;

FIGURE 12 is a longitudinal sectional view taken along a plane as indicated by the line 12—12 of FIGURE 11;

FIGURE 13 is an enlarged cross-sectional view taken along a plane as indicated by the line 13—13 of FIGURE 11;

FIGURE 14 is a plan view showing the card holder removed from the wallet and extended, and

FIGURE 15 is a plan view of one element of the card holder.

Referring more specifically to the drawings, the card holder as illustrated in the FIGURES 1 to 9 comprising the invention is designated generally **12** and includes a sheath, designated generally **13**, a card ejecting slide, designated generally **14**, and an elastic slide ejecting element, designated generally **15**.

The sheath **13** comprises a bottom wall **16** and a top wall **17**. The walls **16** and **17** are preferably formed of plastic and the wall **17** has offset side edge portions **18** which bear flush against side edge portions of one side of the wall **16** and which are secured thereto, as indicated at **19**, in any conventional manner as by a heat sealing process. As seen in FIGURE 3, the top wall **17** is spaced from and disposed substantially parallel to the bottom wall **16** to combine therewith to provide a space for accommodating the slide **14**.

Slide **14** comprises a plate preferably formed of plastic and having a restricted rear end **20**, a terminal portion of which is turned outwardly to provide a transversely extending flange **21**, as seen in FIGURE 2, which extends toward and bears against the inner side of the top wall **17**. The slide **14** has an elongated opening **22** which is disposed centrally of its side edges and which extends to adjacent the ends thereof. The rear end portion **20** is provided with two transversely spaced openings **23** each having a slot **24** extending therefrom, longitudinally of the slide, and which slots open through the flange **21**.

As best seen in FIGURE 6, the bottom wall **16** of the sheath has an elongated notch **25** which opens outwardly of a rear end **26** of said wall and extends to near the forward end **27** thereof. Wall **16** has two transversely spaced openings **28** located between its forward end **27** and the notch **25**, each of which has a slot **29** extending therefrom through said forward end **27**.

As seen in FIGURES 5 and 6, the top wall **17** has an extension **30** which projects from its forward end **31** and which terminates in an angularly turned lip **32** which projects from the plane of the wall **17** toward the plane of the wall **16**.

As seen in FIGURE 2, the sheath **13** is open at both ends thereof and the slide **14** is inserted into said sheath through its open forward end as defined by the edges **27** and **31**. The elastic ejecting element **15** comprises an endless elastic or rubber band which has a part engaging through the openings **23** and another part engaging through the openings **28**, so that the band **15** extends longitudinally of the sheath **13** and slide **14**, between the bottom wall **16** and said slide. A part of said band, which is disposed lengthwise of the sheath **13**, also engages in the notch **25** and the opening **22**. It will be apparent that the band **15** is engaged with and disengaged from the openings **23** through the slots **24** and is engaged with and disengaged from the openings **28** through the slots **29**.

A card **33**, as seen in FIGURE 8, such as a credit card of the type conventionally used at service stations for making purchases on credit, is adapted to be contained in the holder **12** and is applied thereto between the slide **14** and the top wall **17**, as seen in FIGURE 2, so that one end of the card **33** bears against the flange **21**.

The slide **14** is of a width and length substantially corresponding to the width and length respectively, of the card **33**, as seen in FIGURES 7 and 8, so that the other end of the card can be disposed substantially flush with the forward end **34** of the slide when said first mentioned end of the card is abutting flange **21**, as seen in FIGURE 2.

Slide **14**, carrying the card **33**, is moved to a retracted position within the sheath **13** against the action of the elastic element **15** until the forward end **34** of the slide

and the end of the card 33, located contiguous therewith, can be snapped under the lip 32 which thus forms a keeper for retaining the slide and card in a retracted position within the sheath 13. The card holder 12 is then inserted into a pocket 35 of a conventional billfold or wallet 36 so that the wall 17 will be adjacent the outer side of the pocket 35 and its end 31 will project from the open end of said pocket toward the transverse fold line 37 of the billfold and along which the billfold is normally folded in half to assume a closed position.

Assuming that it is desired to remove the card 33 from the holder 12 so that it can be utilized for making a credit purchase, the billfold 36 is opened or extended, as seen in FIGURE 1. Pressure may then be applied by the thumb and index finger to the longitudinal side edges of the sheath 13, which are secured together by the sealing means 19, for causing the top wall 17 to be flexed away from the bottom wall 16 and the slide 14, for disengaging the keeper 32 from the slide end 34 and from the end of the card 33 which is located adjacent said slide end 34. When this occurs, the elastic means 15 will project the slide 14 and the card 33, carried thereby, outwardly of the sheath 13. The slide 14 will normally move outwardly approximately one half of its length to approximately its projected position as seen in FIGURE 4, and with a part thereof extending across the fold line 37 of the wallet. With the slide 14 in its projected position of FIGURE 4, it will be readily apparent that the card 33 can be removed therefrom for use in making a credit purchase. After the card has served this purpose, it is reapplied to the slide between said slide and the wall 17 and is displaced with the slide into the sheath 13, so that the slide and card can be relatched in a retracted position, as seen in FIGURES 1 and 2, with the end 34 of the slide engaging the keeper 32.

It will be noted that the opening 22 of the slide aligns with and is wider than the extension 30 and keeper 32. Accordingly, should an attempt be made to close the wallet before the card 33 has been replaced on the slide 14 and moved therewith to a retracted position, the projected slide 14 will be caused to assume the position as seen in FIGURE 5. Slide 14 is shown in FIGURE 5 flexed upwardly so that extension 30 and keeper 32 extend through the opening 22, so as to prevent the return of the slide to a retracted position while thus flexed, in order that closing the wallet cannot be accomplished. This serves as a warning to the owner of the card that the card has not been replaced in the holder 12, and will function as a reminder to prevent the card 33 being inadvertently forgotten and lost.

In addition, one side edge portion of the slide 14 is slotted, as seen at 38 in FIGURES 4 and 7, to provide a tongue 39 which normally projects from the plane of the slide 14 toward and beyond the plane of the wall 17. If an attempt is made to return the slide 14 to its retracted position before the card 33 has been reapplied thereto, even though the slide has not been flexed as seen in FIGURE 5, the tongue 39 will move over the edge 31 of the wall 17 to prevent return of the slide 14 to its retracted position of FIGURES 1 and 2, and thus provide an additional reminder that the card 33 has not been replaced in the holder.

FIGURE 10 illustrates a slightly modified embodiment of the sheath, designated generally 40, including a bottom wall 41 and a top wall 42 both of which are formed from a single piece of plastic which is folded to form narrow edge walls 43 and 44 for locating the walls 41 and 42 in spaced apart substantially parallel relation to one another. An extension of the edge wall 44 provides a flap 34 which overlies the longitudinal edge of the back wall 41 and which is sealed thereto in any conventional manner, as indicated at 46. The sheath 40 otherwise corresponds with the sheath 13.

FIGURES 11 to 15 illustrate another embodiment of the card holder, designated generally 47, and which, like the card holder 12, comprises a sheath, designated generally 48, a card ejecting slide, designated generally 49, and an elastic slide ejecting element designated generally 50.

The sheath 48 includes spaced substantially parallel walls 51 and 52, both of which are formed from a single piece of plastic 56 which is folded to additionally form narrow edge walls 53 and 54. The ends 55 of the piece 56 terminate in spaced apart relation to one another to form a narrow gap 57 which extends from end to end of the wall 51, adjacent the edge wall 54. Wall 51 has an elongated notch 58 extending from a rear end 59 to adjacent the forward end 60 of said wall. The wall 51 has two transversely spaced openings 61 located between its forward end 60 and the notch 58, each having a slot 62 extending therefrom through said forward end 60. The wall 52 has an extension 63 projecting from its forward end 64 and terminating in an angularly turned lip 65, which projects from the plane of the wall 52 toward the plane of the wall 51.

The slide 49 comprises a plate 66 having two transversely spaced openings 67 disposed adjacent a rear end 68 thereof. A slot 69 extends from each opening 67 through said rear end 68. The slide 49 is preferably formed of plastic and is provided with a slit 70 one end of which opens through a longitudinal side edge 71 thereof and which slit extends from said edge generally toward the other forward end 72 of the slide. The slit 70 forms a tongue 73 which is curved so as to project from the plane of the plate 66.

The elastic slide ejecting element 50 comprises an endless elastic or rubber band a part of which engages through the openings 61 and another part of which engages through the openings 67, so that the band 50 extends longitudinally of the sheath and slide, when the slide is disposed in the sheath, as illustrated in FIGURES 11, 12 and 14. The slide 49 is disposed in the sheath 48 so that when it is in a projected position, as seen in FIGURE 14, the tongue 73 projects across the plane of the wall 51 to pass over the forward end 60, when the slide is retracted, to prevent the slide 49 from being moved to a fully retracted position within the sheath 48, as seen in FIGURES 11 and 12, when a card 74 is not disposed between the slide and said wall 51. However, when the card 74 is placed between the slide 49 and the wall 51 it will force the tongue 73 to assume a position approximately in the plane of the plate 66 so that the slide can be moved to a retracted position in the sheath 48 with its forward end 72 abutting the lip 65 for holding the slide, and the card 74 carried thereby, in a retracted position. It will be noted that the rear end of the card 74 is engaged by the part of the elastic element 50 which extends from the openings 67, so that the elastic element 50 functions to insure that the card 74 will move forwardly with the slide 49 to a projected position, when the slide is released from the lip or keeper 65 as by pressure applied to edge walls 53 and 54 of the sheath, as heretofore described in connection with the card holder 12.

The card holder 17 is positioned in the wallet pocket 35 with the lip or keeper 65 disposed beyond the open end of the pocket and preferably extending outwardly from the open wallet 36, as seen in FIGURES 11 and 12, whereas the lip or keeper 32 of the card holder 12 is normally disposed to extend in the opposite direction or inwardly of the wallet, as illustrated in FIGURES 1 and 2.

The operation of the card holder 47 with the wallet 36 otherwise corresponds with the operation of the card holder 12 with the wallet 36, as heretofore described in detail. By eliminating the flange 21 of the card holder 12, the card holder 47 is made thinner to occupy less space in the wallet pocket 35. The card holder 47, like the card holder 12, is adapted to hold one or more cards.

Various other modifications and changes are contemplated and obviously may be resorted to without depart-

ing from the function or scope of the invention as hereinafter defined by the appended claims.

We claim as our invention:

1. A card holder comprising a sheath having an open end and including spaced substantially parallel walls, a plate forming a slide reciprocably disposed in the sheath and having a forward end projecting through said open end, an elastic means connecting the slide to a part of said sheath and urging the slide outwardly of said open end and to a projected position, keeper means forming an extension of one of said walls and extending outwardly from said open end of the sheath and engaging said forward end of the slide to retain the slide in a retracted position, said slide being adapted to support a card between the slide and said wall, and said sheath including parts adapted to be manually engaged for flexing said wall away from the slide for disengaging said keeper means from the slide and card to permit the slide and card to be moved outwardly of said open end of the sheath and to a projected position by said elastic means.

2. A card holder as in claim 1, said slide including a rear end, a flange extending from said rear end of the slide toward said wall and providing an abutment adapted to be engaged by the rear end of said card for propelling the card with said slide to a projected position.

3. A card holder as in claim 1, and means carried by said slide and engageable with a part of the sheath to prevent return of the slide to a retracted position when the card is detached therefrom.

4. A card holder as in claim 1, said holder being adapted to fit detachably in a wallet or billfold pocket with the open end of said sheath protruding from the open end of the pocket, and said slide having means engageable with the sheath, when the slide is in a projected position and the card is removed therefrom, to prevent return of the slide to a retracted position and for retaining the slide in a position to prevent closing of the wallet or billfold.

5. A card holder comprising a substantially flat sheath having an open end, a plate forming a slide reciprocably disposed in said sheath and adapted to support a card between said slide and one wall of the sheath, a keeper forming a part of the sheath and disposed beyond and adjacent said open end, said slide having a forward end engaging the keeper for retaining the slide and card in a retracted position in the sheath, an elastic means connected to said slide and sheath and urging the slide and the card carried thereby outwardly through said open end of the sheath, and said sheath including connected side edges adapted to be manually engaged for flexing a portion of the sheath away from the slide to disengage the keeper from the slide for movement of the slide and card through the open end of the sheath.

6. A card holder as in claim 5, said slide having a flange at its other rear end forming an abutment adapted to engage an end of the card for propelling the card with the slide to a projected position.

7. A card holder as in claim 5, and means carried by said slide engageable with a part of the sheath to prevent return of the slide to a retracted position in the sheath while the card is detached therefrom.

8. A card holder as in claim 5, a part of said elastic means clamping the card against the slide to insure movement of the card with the slide to a projected position.

References Cited by the Examiner

UNITED STATES PATENTS

1,918,868	7/1933	Rolfs	150—39

FOREIGN PATENTS

1,207,220	8/1959	France.
356,453	7/1922	Germany.
373,469	4/1923	Germany.

FRANKLIN T. GARRETT, *Primary Examiner.*