July 19, 1966 H. H. SHOEMAKER ET AL 3,261,117

DITCHING MACHINE

Filed June 18, 1963

6 Sheets-Sheet 1

FIG. 1

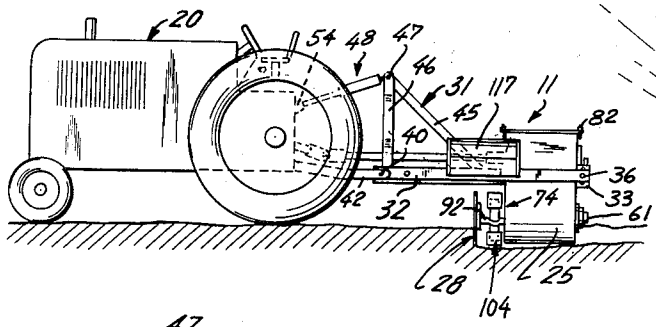

FIG. 2

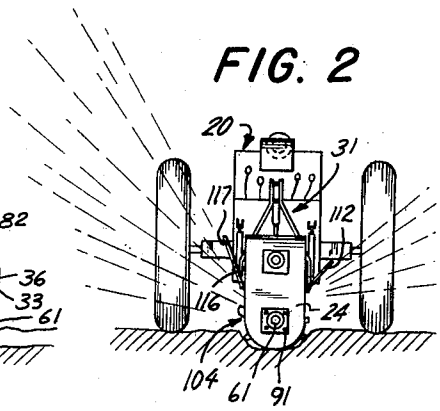

FIG. 3

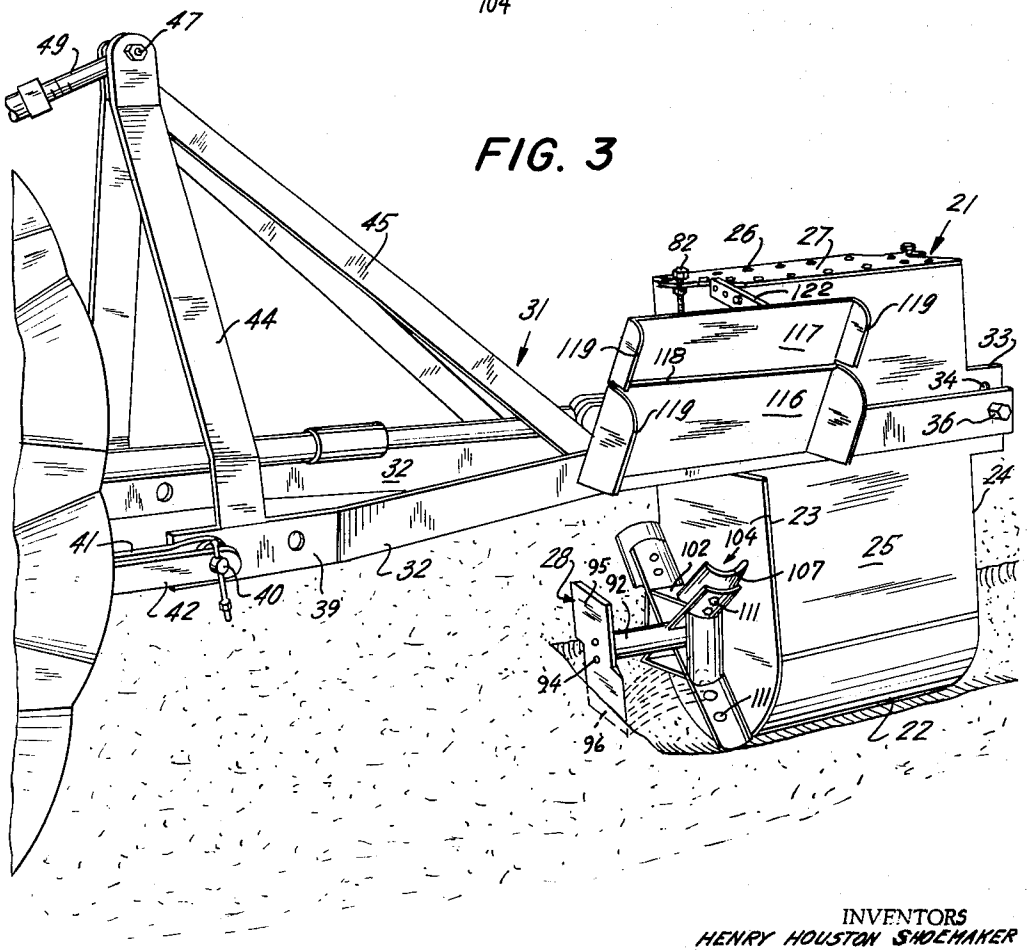

INVENTORS
HENRY HOUSTON SHOEMAKER
WILEY D. POOLE

BY
Benjamin Sweedler
ATTORNEY

July 19, 1966 H. H. SHOEMAKER ET AL 3,261,117

DITCHING MACHINE

Filed June 18, 1963 6 Sheets-Sheet 2

FIG. 4

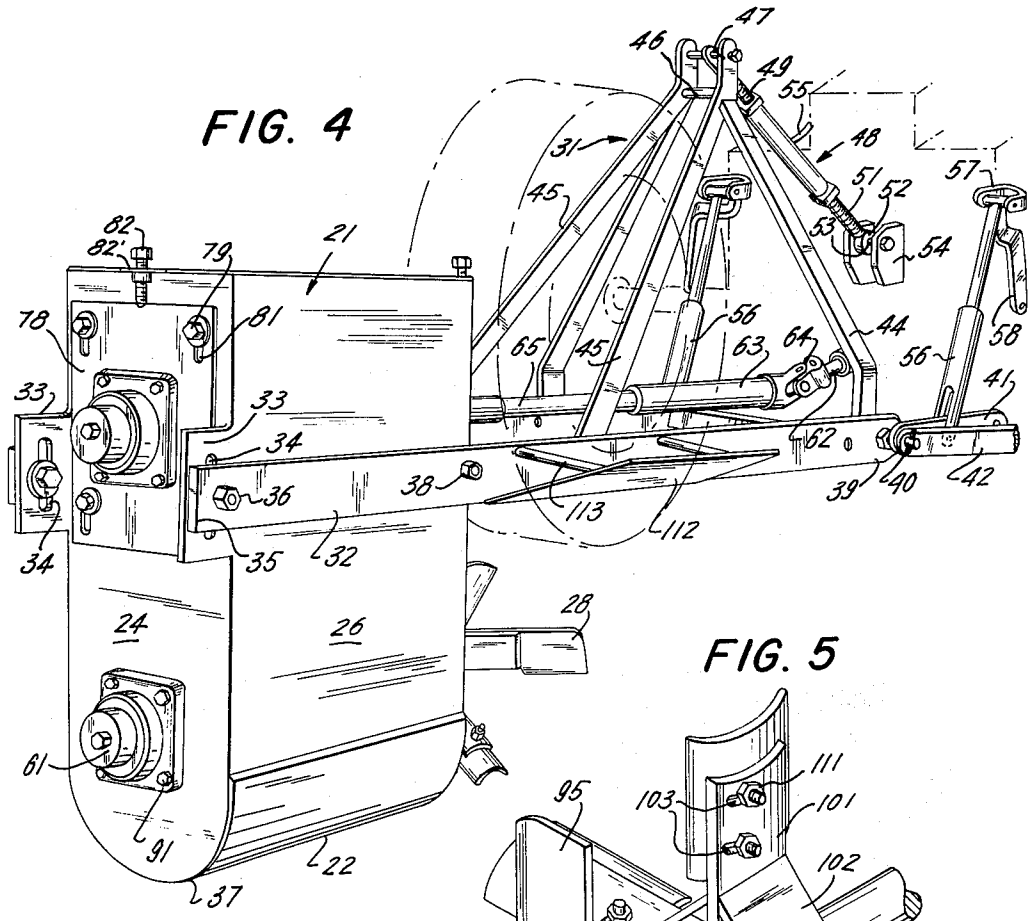

FIG. 5

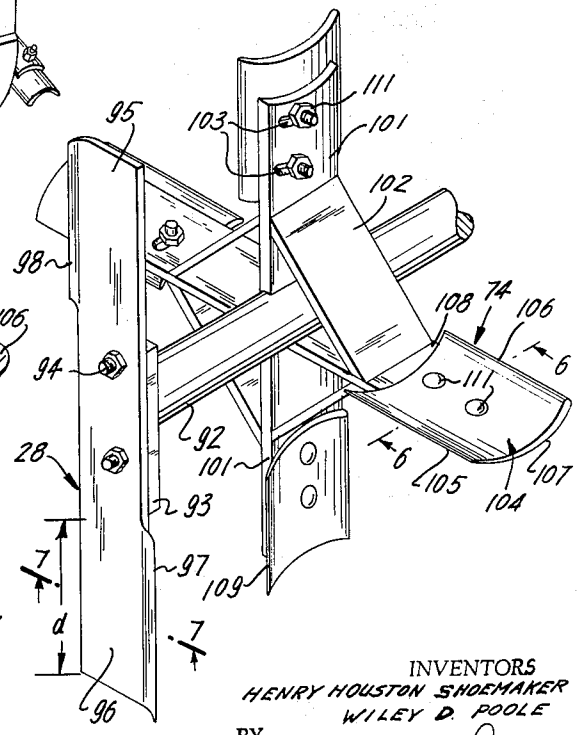

FIG. 6

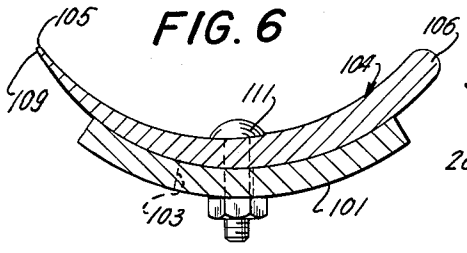

FIG. 7

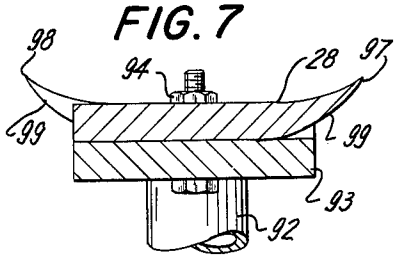

INVENTORS
HENRY HOUSTON SHOEMAKER
WILEY D. POOLE
BY
Benjamin Sweedler
ATTORNEY

July 19, 1966 H. H. SHOEMAKER ET AL 3,261,117

DITCHING MACHINE

Filed June 18, 1963 6 Sheets-Sheet 3

FIG. 8

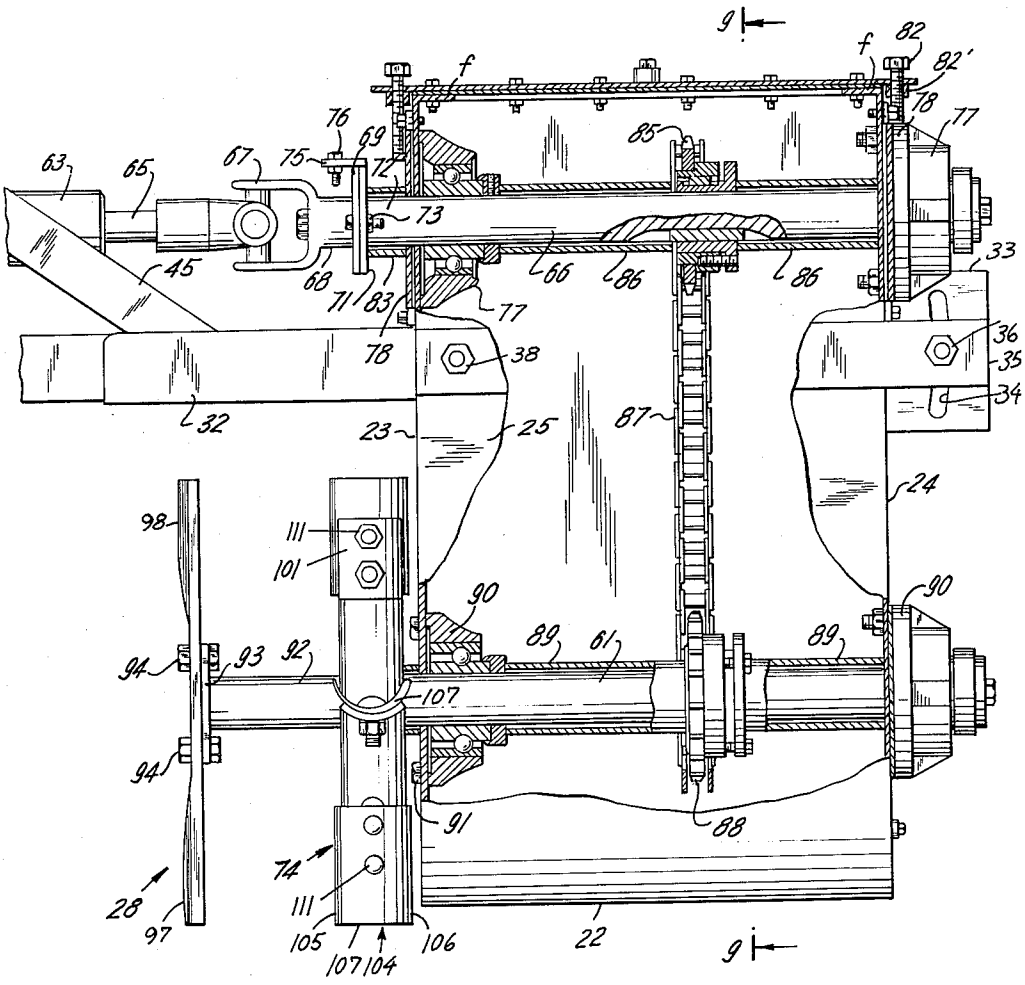

INVENTORS
HENRY HOUSTON SHOEMAKER
WILEY O POOLE
BY
Benjamin Sweeller
ATTORNEY

July 19, 1966 H. H. SHOEMAKER ET AL 3,261,117

DITCHING MACHINE

Filed June 18, 1963 6 Sheets-Sheet 4

FIG. 9

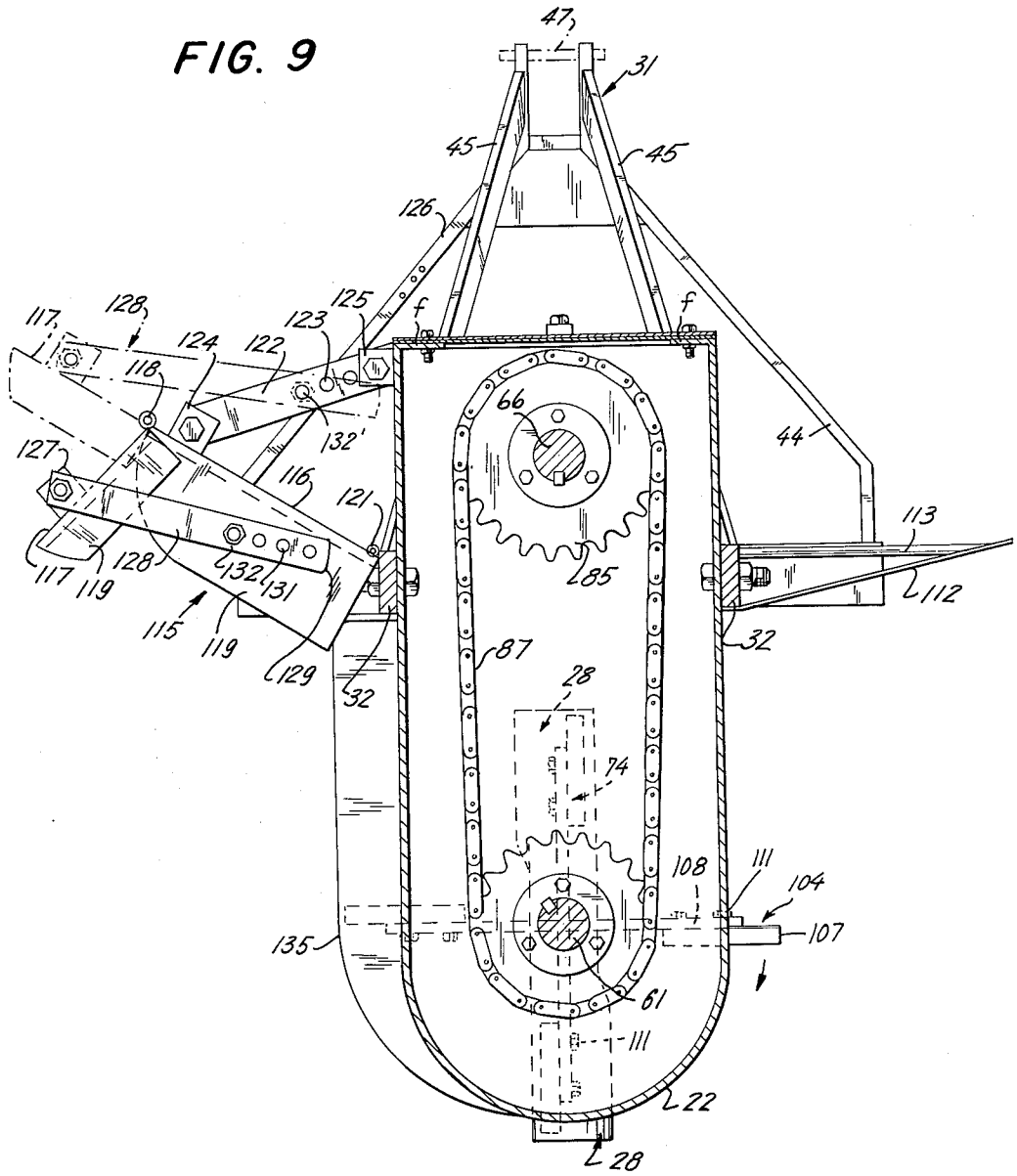

INVENTORS
HENRY HOUSTON SHOEMAKER
WILEY O. POOLE

BY
Benjamin Sweeller
ATTORNEY

July 19, 1966 H. H. SHOEMAKER ET AL 3,261,117

DITCHING MACHINE

Filed June 18, 1963 6 Sheets-Sheet 5

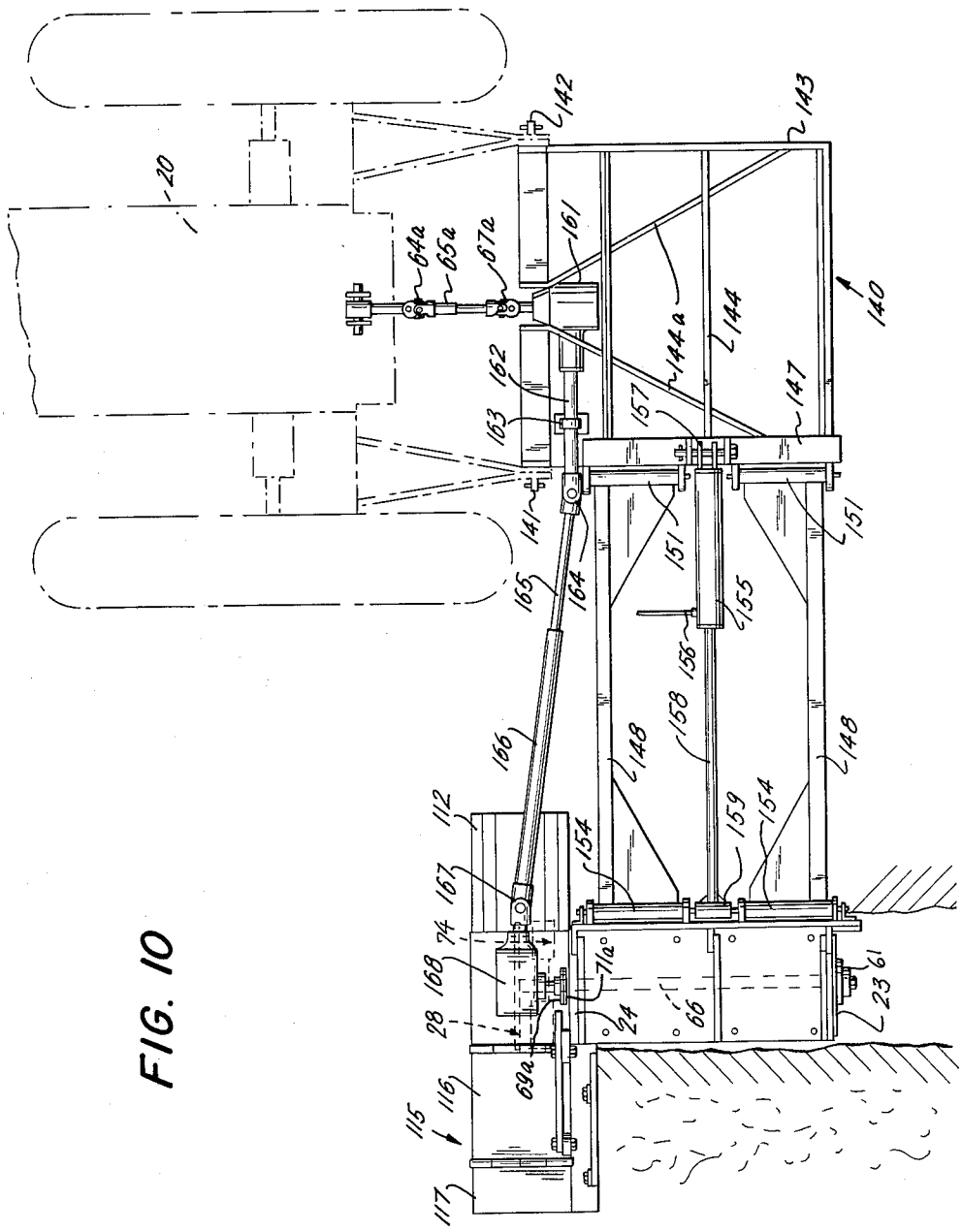

FIG. 10

INVENTORS
HENRY HOUSTON SHOEMAKER
WILEY D. POOLE

BY
Benjamin Sweeller
ATTORNEY

July 19, 1966 H. H. SHOEMAKER ET AL 3,261,117

DITCHING MACHINE

Filed June 18, 1963 6 Sheets-Sheet 6

FIG. 11

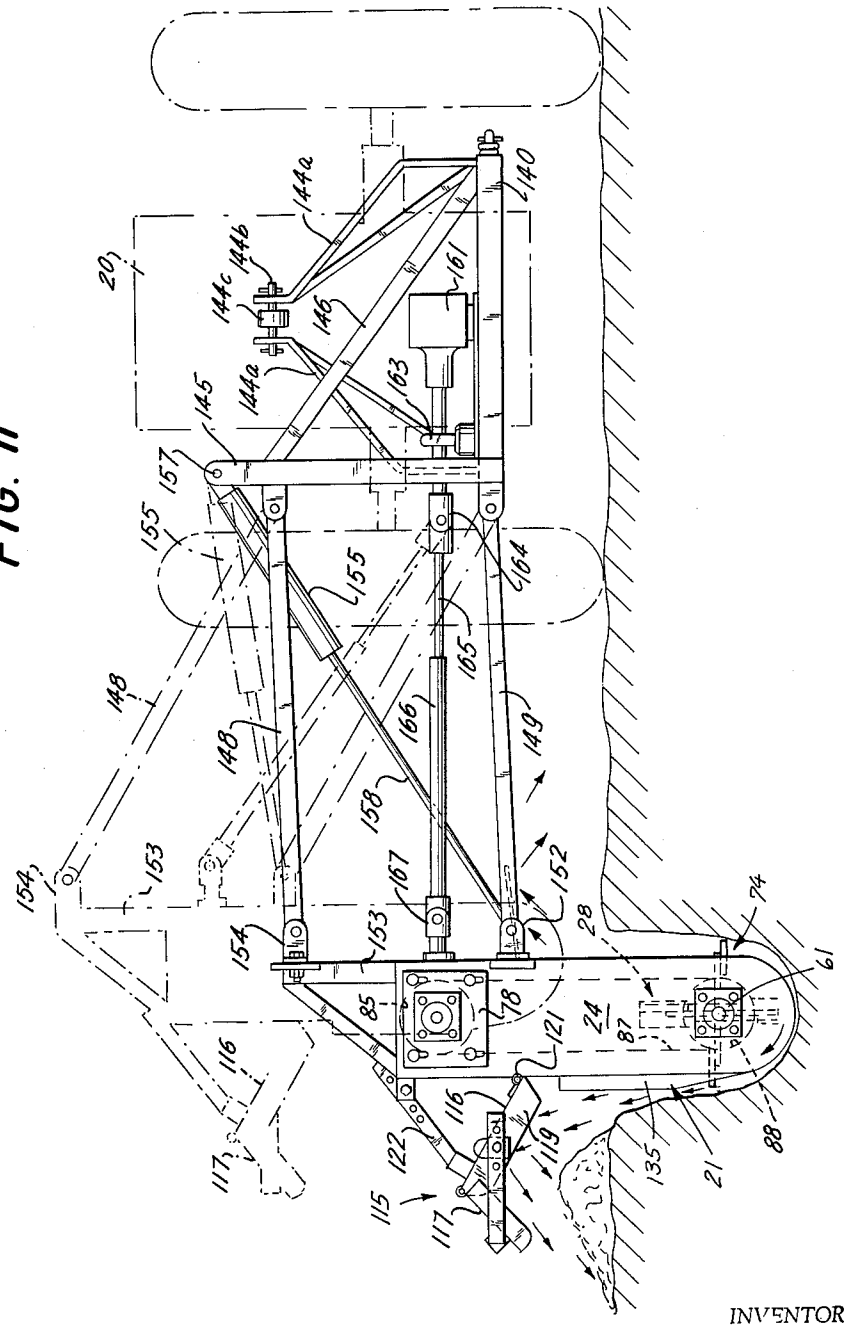

INVENTORS
HENRY HOUSTON SHOEMAKER
WILEY D. POOLE

BY

Benjamin Sweedler
ATTORNEY

United States Patent Office 3,261,117 Patented July 19, 1966

3,261,117

DITCHING MACHINE

Henry Houston Shoemaker, P.O. Box 505, Rayville, La., and Wiley D. Poole, 4468 Cypress St., Baton Rouge, La.

Filed June 18, 1963, Ser. No. 288,641
3 Claims. (Cl. 37—92)

This invention relates to a machine for forming and/or cleaning, ditches in soil, which machine will be referred to hereinafter for the sake of brevity, as a "ditcher." More particularly this invention relates to a ditcher adapted to be powered and drawn by a tractor or other power driven vehicle and to form and/or clean ditches in soil for irrigation, drainage, underground pipe laying, and other purposes. While the invention will be described hereinafter in connection with a preferred embodiment involving a ditcher powered from and pulled by a tractor, it will be understood that other power driven vehicles can be used in lieu of a tractor.

Ditchers powered from tractors, self-contained and self-powered ditchers, and ditchers combining powered earth scattering implements with a manual digging implement and which are moved manually along the earth to form the ditches, are known. Such ditchers heretofore suggested have, among other objections, the objection that those which are self-powered or powered from tractors have been too involved and costly from the standpoint of initial investment, necessary maintenance and operation, so much so that numerous farms and plantations of small or moderate size could not justify the cost of buying or leasing such expensive equipment. The smaller, simpler machines involving manual labor for moving the machine or for the earth digging implement, or both, are objectionable for this reason.

It is a principal object of the present invention to provide a ditcher of simple, compact, rugged design, efficient in operation, powered from and adapted to be pulled by a tractor, which ditcher, once set for a given depth of ditch, produces such ditch, requiring a minimum amount of care and attention in operation and which ditcher, chiefly because of its compact, simple design, can be manufactured for sale at a relatively low price. Thus the present invention provides the relatively small farmer or plantation owner with a ditcher at a price which he could afford and which enables him to effect a substantial saving in the formation and cleaning of drainage, irrigation and other such ditches.

It is another object of this invention to provide a ditcher which can be adjusted readily, to produce any desired depth of ditch and moved and held above ground level when the tractor pulling the ditcher is travelling to or from the location of operation.

Still another object of this invention is to provide such ditcher having adjustable soil deflection plates which can be moved to permit scattering of the earth along the sides of the ditch as formed or to effect automatic placement of the soil in a mound along the one side of the ditch where it is conveniently positioned for filling the ditch, for example, in the case of ditches formed for laying underground pipe lines where it is desired, after the pipe has been inserted in the ditch, to cover the same by the earth removed in forming the ditch.

A further object of this invention is to provide a ditcher which can be positioned so that it is disposed to one side of the tractor for movement in a plane parallel to the tractor and thus can be utilized in forming and/or cleaning ditches located in the earth where the ditches would not be accessible to a ditcher positioned in back of the tractor.

The ditcher embodies other important features and advantages, which will be apparent from the following description of preferred embodiments of the invention taken with the accompanying drawings which show, for purposes of exemplification, preferred forms to which, however, the present invention is not limited. In the accompanying drawings:

FIGURE 1 is a side elevational view of the ditcher pulled by a tractor, with the ditcher mounted directly in back of the tractor and showing it in ditch forming position;

FIGURE 2 is a rear view of the ditcher of FIGURE 1, showing it in position forming a ditch and moving away from the viewer;

FIGURE 3 is a fragmentary perspective view of the ditcher embodying this invention in ditch forming position and viewing same from the front of the ditcher, i.e., front in terms of the direction of movement of the ditcher when forming a ditch;

FIGURE 4 is a perspective view, on a scale somewhat larger than that of FIGURE 3, showing the ditcher viewing the same from the rear end thereof and also showing one form of mounting or attaching structure for securing the ditcher to the tractor;

FIGURE 5 is a fragmentary perspective view of a portion of the driven shaft carrying the cutter knife and the scattering or cleaning scoops;

FIGURE 6 is a section through a scattering or cleaner scoop taken in a plane passing through line **6—6** on FIGURE 5;

FIGURE 7 is a composite view showing a section through one cutter section of the cutter knife taken in a plane passing through line **7—7** on FIGURE 5, a section through the attachment plate for the cutter knife, and in elevation the cutting edge of the other cutter section of the knife;

FIGURE 8 is a vertical section, partly in elevation of the ditcher housing, broken away to show the interior construction and also showing in elevation, a side view of the cutter knife and the scattering or cleaning scoops mounted on the end of the driven shaft positioned exteriorly of the housing;

FIGURE 9 is a vertical section taken in a plane passing through line **9—9** on FIGURE 8 and showing in elevation the adjustable soil deflection plates in position for pile placement of the soil removed to form the ditch;

FIGURE 10 is a plan view showing the tractor in phantom and the mounting for the ditcher at the side of the tractor rather than immediately in back of the tractor as in the case of FIGURES 1 to 4, inclusive; and

FIGURE 11 is a rear elevational view of the construction shown in FIGURE 10, with the adjustable soil deflection plates positioned to effect placement of the soil in a mound or pile adjacent the side of the ditch.

Referring to FIGURES 1 to 4 of the drawing, **20** is a tractor of any known type provided, as conventional, with a power plant for driving the tractor and providing the motive power for drawing or pulling the ditcher and driving the moving parts thereof. The ditcher comprises a housing **21**, desirably shaped as shown in FIGURES 1 to 4, inclusive, extending in a generally longitudinal direction substantially parallel to the length of the ditch to be dug. Housing **21** has a convex base **22**, a front wall **23** ("front" in the sense of the direction of movement of the ditcher when drawn by the tractor), rear wall **24**, sides **25** and **26** and a top **27**. These walls (except for the top **27**) are suitably joined as by welding to form a gas tight enclosure for the driving mechanism within the housing. The top **27** is bolted or otherwise fastened to the flanges *f* at the upper ends of the walls **23** to **26** inclusive so that it is readily removable to give access to the interior and replaceable to provide a substantially gas tight enclosure for the drive mechanism therein.

Housing 21 is dimensioned to be accommodated with little clearance in the narrowest ditch for the formation and/or cleaning of which the ditcher is designed. The particular shape of housing 21 is not critical and it can be dimensioned and shaped as desired provided its width is such that the lower portion thereof can readily be accommodated by the width of the ditch to be formed. The ditcher is designed to dig ditches of any desired width within reasonable limits, the width being determined by the dimensions of the cutter knife 28, hereinafter described. The longer the cutter knife 28 the wider the ditch.

Housing 21, in the form of the invention shown in FIGURES 1 to 4, inclusive, is attached to the tractor 20 for movement therewith, by a frame 31 comprising side bars 32, attached to opposite sides of the housing 21. The fastening of the respective ends of each of the two side bars to the housing and linkage mechanism securing same to the tractor is substantially the same; hence the structure on one side will be described in detail. As shown in FIGURES 3 and 4 the sides 25 and 26 of the housing have extending ears 33 at the rear thereof. Each ear is provided with an elongated substantially vertical slot 34. End 35 of each side bar is secured to an ear 33 by a nut and bolt 36, the bolt passing through slot 34, thus permitting variable positioning of end 35 of each side bar 32 relative to its ear 33 to thereby raise or lower the heel 37 of the housing. This adjustment enables adjusting of the depth of the cut effected by cutting knife 28 and hence the depth of the ditch within the limits, determined by the dimensions of slot 34.

Side bars 32 are secured to side walls 25, 26, by a nut and bolt 38 (FIGURE 4), the latter provides a fixed pivot point about which housing 21 can move to adjust the position of heel 37 to alter the depth of cut effected by cutter knife 28. When it is desired to adjust the position of the heel 37, the nuts associated with the nuts and bolts 36 and 38 on each of the opposite sides of the housing 21 are loosened to permit pivotal movement of the housing 21 to the desired adjusted position, thereafter the nuts and bolts 38 tightened and also the nuts and bolts 36 on the opposite sides of the housing to secure the housing in adjusted position.

The end 39 of each of the side bars 32 is pivotally mounted on pivot pin 40 on which is also mounted one end of a connecting bar 41, the other end of which is pivotally fastened to the chassis or other part of the tractor 20. Stabilizing bars 42 extend from the pivot pin 40 to the tractor chassis. Upwardly converging bars 44, 45 extend from each of the side bars 32; the lower ends of these converging bars 44, 45 are fixed to the side bars 32 and their upper ends are joined by a cross-bar 46 to form the upper portion of the rigid frame 31. An axle or rod 47, as clearly shown in FIGURE 4, is mounted in the upper portion of this frame.

Pivoted on this rod 47 is an adjustment bar 48 comprising right and left handed threaded members 49, 51, the latter having its end 52 pivoted on a pin 53 fixed to the rear of the tractor by means of brackets 54. Adjustment bar 48 desirably is provided with a handle 55 for effecting actuation thereof to elongate or shorten its effective length. Actuation of this adjustment bar 48 effects pivotal movement of the supporting frame 31 about the pivot pins 40 to raise or lower the housing 21 and thus control the depth of the ditch produced by the ditcher in operation. Adjustment bar 48 provides a ready means for producing adjustment of the depth of the ditch during operation of the ditcher; such adjustment can be effected by the operator on the tractor 20.

The ditcher can be designed to have the side bars 32 fixed to the housing 21 rather than secured thereto by means of the nut and bolt fasteners 36 and 38 which permit adjustment of the position of housing 21 relative to side bars 32. In such construction adjustment of depth of cut and hence depth of ditch is effected by adjusting

member 43 and the parts associated therewith for effecting pivotal movement of the frame 31 about the pivot pins 40. Alternatively, the converging bars 44, 45 and the adjusting bar 48 associated therewith, or only the adjusting bar 48, can be eliminated, with the ends 39 of side bars 32 pivoted directly to the tractor chassis. In the latter construction, adjustment of housing 21 and hence adjustment of the depth of cut is effected by positioning the housing 21 relative to the side bars 32 by moving the housing about nuts and bolts 38 as pivots and thereafter securing same in adjusted position by tightening the nuts and bolts 36 and 38 as hereinabove described.

The ditcher can be lifted or lowered to adjust for depth of cut or for cleaning an existing ditch or for elevating the ditcher above the ground when transporting same to or from the location of the ditch to be formed or cleaned, by links 56, one for each of the connecting bars 41, having their lower ends pivotally fastened to the connecting bars 41, as shown in FIGURE 4. The upper end of each of these links 56 is pivotally secured at 57 to an operating lever 58 which has its lower end mounted on a stub shaft actuated from the drive for the tractor. Actuation of this stub shaft effects rocking of the lever 58 and hence the connecting links 56 to raise or lower the connecting bars 41 depending upon the direction of rocking of this stub shaft. Such movement of the connecting bars raises or lowers, as the case may be, the pivot pins 40 effecting raising or lowering respectively of frame 31 about pin 53 as a pivot.

The driving mechanism for the driven shaft 61 of the ditcher will now be described, with reference to FIGURES 4 and 8. Coupled to the power take-off of the tractor 20 is the first section 62 of the drive mechanism. A shaft 63 is coupled to first section 62 by a universal joint 64. Shaft 63 has a telescoping shaft section 65 which is coupled to a ditcher jack shaft 66 through universal joint 67 (FIGURE 8) one portion of which comprises a sleeve 68 provided with a flange 69 abutting a flange 71 on the extending end 72 of the jack shaft 66. Flanges 69 and 71 are held together by shear bolts 73. During operation should the ditcher cutter knife 28 or scattering scoops 74, hereinafter described in detail, encounter an object causing overload or excessive strain on the mechanism, the shear bolts 73 will shear, thereby discontinuing the power drive for the cutter knife 28 and the scattering scoops 74. To prevent the disconnected flanges 69 and 71 from separating widely, flange 71 is provided with an overhand 75 having therein a holding bolt 76 which acts as a stop or abutment for flange 69, should shearing of the shear bolts 73 take place.

Jack shaft 66 is mounted for rotation in the upper portion of housing 21 in bearings 77, each bolted to its adjustment plate 78 (FIGURE 4) on the front and rear walls of the housing 21 by the bolts 79 which pass through adjustment slots 81 in the adjustment plates. Each adjustment plate desirably has at its upper edge a threaded boss 82' in which is positioned the threaded end of an adjustment bolt 82 (FIGURE 8) to facilitate adjustment of the adjustment plates 78. A spacer collar 83 is positioned between flange 71 and the adjustment plate 78 on the front wall 23 of housing 21.

Keyed to jack shaft 66 is a sprocket 85. To prevent lateral movement of sprocket 85 on its shaft, spacer sleeves 86 are positioned on opposite sides of the hub mounting of the sprocket 85. Power is transmitted from the jack shaft 66 to the driven shaft 61 through chain 87 travelling over sprocket 85 and a second sprocket 88 keyed to driven shaft 61. Lateral movement of sprocket 88 on driven shaft 61 is prevented by a pair of spacer sleeves 89. Driven shaft 61 is mounted for rotation in the lower portion of housing 21 in bearings 90 fixed to the front and rear walls of the housing by bolts 91.

End 92 of driven shaft 61 extends from the front wall 23 of housing 21. The free end of this shaft has an attachment plate 93 to which is attached by nuts and bolts 94 the cutter knife 28. As best shown in FIGURES 5

and 7 cutter knife **28** is in the form of an oblong plate, detachably secured to plate **93** by the nuts and bolts **94** near its transverse median. Thus two radially extending cutting sections **95, 96** are formed diametrically opposite each other The diagonally opposite side edges form knife edges **97, 98** which are the leading edges of the cutter knife in the direction of rotation thereof. The marginal area of the back of each cutting section **95, 96** is inclined outwardly from the knife edge towards an intermediate area of the cutting section, i.e., is of gradually increasing thickness as shown in FIGURE 7 by reference character **99** in a direction toward the scattering scoops. The cutter knife is dimensioned so that the length of the knife edge, i.e., the distance indicated by *d* on FIGURE 5 equals the desired depth of cut, i.e., depth of the ditch. The cutting knife **28**, as noted, is replaceable so that by choosing a knife having knife edges **97, 98** of the required length, a ditch of desired depth can be formed. As clearly shown in FIGURES 5 and 7 the knife edges **97, 98**, viewed from the front of the ditcher, i.e., looking at the front wall **23**, is shaped to provide a somewhat concave appearance, the knife edges **97, 98** lying forwardly of the plane of the face of the cutting sections **95, 96** carrying the knife edges **97, 98** respectively.

The scattering scoops **74**, in the embodiment shown in the drawings comprise radial mounting members **101**, the inner ends of which are fixed to end **92** of driven shaft **61** just behind the cutter knife **28**. Bracing members **102** are fixed to mounting members **101** to brace them and also to prevent soil, trash and the like from becoming caught in the hub portion of the scattering scoops **74**, when the ditcher is operating. The outer ends of mounting members are of concave-convex shape and each has oblong adjustment slots **103**, two such slots being shown in FIGURE 5, to permit adjustment of the scoops **104**, towards the cutter knife **28**. Each scoop is defined by substantially parallel side edges **105, 106**, end edges **107, 108**, the end edges extending substantially parallel to the axis of the driven shaft **61**. The side edges **105** of each scoop immediately adjacent the cutter knife **28** is shaped to provide a cutting edge **109**, to cut through the cut or loosened soil formed by the cutter knife **28**. The thickness of each scoop increases gradually from this cutting edge **109** toward the opposite edge **106** as shown in FIGURE 6. Each scoop is of concave-convex shape to fit snugly in the congruent shaped outer end of its mounting member **101**. Each scoop is held in place on its mounting member **101** by nuts and bolts **111** passing through the adjustment slots **103**. This construction permits adjustment of the individual scoops as wear takes place, and ready replacement of a worn scoop, when necessary.

Fixed to side bar **32**, on one side of the ditcher housing **21** is a stationary soil deflector **112** (FIGURE 4) held in place by brace members **113**. This stationary soil deflector is positioned on the side of the ditcher housing, where during rotation of the scattering scoops the scoops enter the soil, i.e., on the side where little, if any, soil is scattered by the scoops **104** during their rotation. Soil deflector **112** is positioned and dimensioned to be located above the upper ends of the scoops **104**, from a point adjacent front wall **23** of housing **21** to a point beyond the cutter knife **28**.

On the other side of the ditcher, as best shown in FIGURE 9, is attached an adjustable soil deflector **115**. This deflector comprises two flat plates **116** and **117** hinged together along adjoining longitudinal edges at **118** for relative movement and each having at each end a depending end flange or skirt **119**. These plates are dimensioned to extend from a point immediately adjacent front wall **23** to just beyond the cutter knife **28**. Plate **116** is hinged to side bar **32** at **121**. Link **122** provided with a row of openings **123** is pivotally secured at its opposite ends to mounting brackets **124, 125** on plate **116** and housing **21**, respectively, to maintain plate **116** in a desired adjusted inclined position relative to housing **21**. The angle of inclination of plate **116** relative to the side wall of housing **21** can be changed as desired, by changing the point of attachment of link **122** with bracket **125**. Desirably the end of plate **116** opposite to that carrying the bracket **124** has a similar bracket and adjustable link **126** extending between this bracket and frame **31** as shown in FIGURE 9.

Hinged plate **117** has at its opposite ends, upstanding brackets **127** to which are pivotally mounted one end of links **128**, opposite end **129** of which has therein a plurality of openings **131** adapted to be fastened by bolt and nut **132** to the flanges **119** at the ends of plate **116**, as shown in full lines, in FIGURES 9 and also adapted to be fastened by bolt and nut **132'** to the link **122** as shown in dot and dash lines in FIGURE 9. In the full line position shown in FIGURE 9, the plates **116** and **117** act as soil deflectors to produce a mound of soil along the side of the ditch being dug, as shown in FIGURE 11, the soil as thrown by the scoops **104** striking the deflector plate **117** and then falling to form the mound. In the dotted line position of FIGURE 9 deflector plates **116** and **117** are in alignment at an obtuse angle to the side of housing **21** and permit the soil to be thrown a substantial distance from the side of the ditch being formed and thus scattered along the area adjacent the ditch rather than form a mound or pile along the side. The shape of the mound formed, whether wider or narrower, can be controlled by positioning the deflector plates **116, 117** relative to each other and to the side of the housing **21**; the structure and mounting of the deflector plates hereinabove described permits such positioning to be readily effected.

A lip flange member **135** (FIGURE 9) is secured to the front wall **23** of housing **21** extending from just below the side bar **32** along the side of the housing to approximately the median of the convex base **22**. This flange provides a cleaning action for soil and trash.

As the ditcher housing is pulled by the tractor, soil and trash which the rotating scoop did not remove from a given area traversed thereby are forced into the rotating scoops by the action of this lip flange and removed from the ditch by the scoops.

The soil cutting knife is driven at a speed synchronized with the forward speed of the tractor, both being driven from the tractor power source. The particular speed of rotation and movement of the tractor will depend on the nature of the soil; with a little experience an operator can readily determine optimum speed of movement of the tractor based on performance at a few trial speeds for any particular soil. The forward speed of the tractor determines the amount of soil cut by the knife per revolution. The width of the ditch being dug, as noted, depends on the length of the cutter knife **28**; the combined length of the diagonally opposite cutting edges **97, 98** is equal to the effective length of the cutter knife. The depth of the ditch generally is approximately equal to the length of one of the cutting edges **97, 98**, i.e., half the total effective length of the cutter knife **28**. Where the soil is firm so that when cut it will not pile up against the ditcher housing a somewhat deeper ditch can be made. When cleaning an existing ditch, the ditch can be deeper than the length of one of the cutting edges **97, 98** provided the distance between the ends of the scattering scoop and the side of the ditch is such as to permit the scoops to discharge the soil and debris over the side of the ditch.

The length of the cutting edge **97** or **98** is somewhat longer than the radius of each scattering scoop; by radius of a scoop is meant the straight line distance from the axis of shaft **61** to the end edge **107** of the scoop. The knife **28** forms the ditch; the scattering scoops do not cut or touch the sides or bottom of the ditch. They catch and scatter or effect the piling in a neat pile of the soil thrown back by the cutting knife due to the shape of the cutting edges shown in FIGURE 7; the gradual thickening of

the cutting edge from the knife edge to the intermediate area forces the cut soil as the knife is rotated away from the knife toward the rotating scoops. This action is illustrated in FIGURE 3. While for reasons of economy and efficiency a cutting knife consisting of two sections having diagonally opposite cutting edges is preferred, if desired, the cutting knife can be designed to have more than two radially extending cutting edges, each shaped as shown in FIGURE 7, to effect cutting of the soil and movement of the cut soil toward the rotating scattering scoops.

In the modification of the invention shown in FIGURES 10 and 11, the ditcher is mounted for operation at the side and rear rather than directly to the rear as in FIGURES 1 to 4. The housing **21**, the cutter knife **28**, the scattering scoops **74** and associated parts, including driven shaft **61**, jack shaft **66**, and adjustable mounting therefor are the same as described above in connection with FIGURES 1 to 9, inclusive. In FIGURES 10 and 11 a frame type platform **140** is secured to the rear of the tractor at **141**, **142**. This platform **140** comprises channel bars or other suitable frame members **143** defining a rectangular platform braced by transverse bracing rods **144**. Bracing rods **144***a*, shown in FIGURES 10 and 11, as best shown in FIGURE 11, extend upwardly from the floor of the frame **140** and have their upper ends fastened to a supporting bar **144***b* carried by a fixed extension **144***c* from the tractor. Upstanding supporting members **145** (FIGURE 11) are fixed to the platform **140**, at the left hand side corners viewing FIGURES 10 and 11 and these are braced by members **146** and connected by cross-bars **147**. Two top parallel supporting arms **148** and two bottom parallel supporting arms **149**, each have their right hand ends (viewing FIGURES 10 and 11) pivotally connected to supporting platform **140** by hinge bushings **151** and their left hand ends pivotally connected to brackets **152** at the opposite sides of the side wall of housing **21** and upstanding supporting members **153** rising from housing **21** by hinge bushings **154**.

A pressure fluid cylinder **155** having a piston (not shown) therein as conventional and having exit and exhaust valve controlled parts (one of which is shown at **156**, FIGURE 10) for supply of pressure fluid to and exhaust of pressure fluid from the cylinder to effect actuation of the piston is pivoted at **157** to frame **140**. The piston rod **158** of this cylinder is pivotally connected to the housing **21** through hinge bushing **159** (FIGURE 10).

Parallel supporting arms **148** and **149**, thus form a parallelogram type supporting frame for raising or lowering the ditcher housing. Pressure fluid cylinder **155** can either extend or shorten the distance between the hinge or pivot points **157** and **159** (FIGURE 11) thus lowering or raising the ditcher. Since the supporting arms **148**, **149** are all the same length, the ditcher can thus be moved up or down to adjust the depth of the ditch to be formed; the ditcher will move in a plane parallel to its operating positions. It may thus be raised completely out of the ground for transporting as shown in dotted line in FIGURE 11.

The power train for operating the ditcher of FIGURES 10 and 11 is supplied from the power take-off of the tractor, and comprises universal joint **64***a*, telescoping shaft section **65***a*, universal joint **67***a*, which is the same power drive used when the ditching apparatus is mounted in the rear of the tractor. Universal joint **67***a* is connected to the input shaft of the angle gear housing drive **161** which drives shaft **162** mounted for rotation in bearings **163**. Power is transmitted to the driven shaft **161** through universal joint **164**, telescoping shafts **165**, **166**, universal joint **167** and angle gear drive **168**. The output shaft of this angle gear drive **168** is connected to flange **69***a* connected by shear bolts with the cooperating flange **71***a* on the end of jack shaft **66**. The remainder of the drive is the same as hereinabove described in connection with FIGURES 1 to 9, inclusive.

From the foregoing it is evident the present invention provides a ditcher for digging or cleaning ditches, trenches or the like, which can be mounted to the rear or side-rear of a tractor or other suitable vehicle by a mounting which permits raising or lowering in a vertical plane, in the case of the modification of FIGURES 10 and 11, and in a substantially vertical plane, in the modification of FIGURES 1 to 4, inclusive, to adjust the depth of cut and also to elevate the ditcher above ground level for transportation purposes to and from the location of a ditch to be formed. In operation, as the ditcher housing is drawn by the tractor the rotating knife **28** cuts away soil forcing it back into the path of the rotating scattering scoops which throws the soil outward from the ditcher. The placement of the soil can be controlled by the adjustable deflector **115**.

In both modifications the ditcher can be readily raised or lowered employing, in the case of the modifications in FIGURES 10 and 11, the pressure fluid cylinder **155** for this purpose, and in the other modification the motive power of the tractor to actuate the links **58** not only to adjust the depth of cut and to facilitate movement of the ditcher to and from location but also to pass over obstructions such as bridges, etc.

It will be understood that the specific embodiments herein described and shown in the drawings constitute exemplary embodiments of the invention and that a number of changes can be made in the details of construction and arrangement of parts without departing from the scope or spirit of the invention. Hence this invention is not to be limited to the above description or showing of the drawings except as indicated in the appended claims.

What is claimed is:

1. A ditching machine comprising, in combination, a tractor, a housing extending in a generally longitudinal direction substantially parallel to the length of the ditch to be dug and of a width less than the width of said ditch, a driven shaft arranged to be driven from the drive for said tractor journaled for rotation in the upper portion of said housing, a drive shaft in the lower portion of said housing driven by said driven shaft, said drive shaft having one end thereof extending from the end of said housing adjacent said tractor, a soil cutting knife fixed to the extending end of said drive shaft for rotation therewith, radially extending supports mounted on said drive shaft for rotation therewith and radially extending scattering scoops, one for each support, adjustably positioned on said support for movement in a direction toward and away from said cutting knife, said scattering scoops being positioned between said cutting knife and said housing and being each defined by substantially parallel end and side edges, the latter extending substantially parallel to the axis of said drive shaft, the side edges immediately adjacent the cutting knife being shaped to provide a cutting edge and the thickness of each of said scattering scoops increasing gradually from said cutting edge to the opposite side edge, said cutting knife having at least two diametrically oppositely positioned, substantially rectangular blades, each having the leading side edge in the direction of rotation extending substantially radially relative to said drive shaft and shaped to provide a knife edge, the marginal area of said blades facing said vehicle being inclined outwardly from the said knife edge towards an intermediate area thereof whereby upon rotation of said cutting knife, soil is cut and as said cutting knife continues to move through said soil, the cut soil is moved by the aforesaid inclination in a direction away therefrom toward the scattering scoops.

2. A ditching machine, in combination, a tractor, a housing mounted on said tractor in the rear thereof to be drawn thereby, a driven shaft arranged to be driven from the drive for said tractor journaled for rotation in the upper portion of said housing, a drive shaft in the lower portion of said housing driven by said driven shaft, said drive shaft having one end thereof extending from the end of said housing adjacent said tractor, said housing forming a substantially gas tight enclosure for said driven

shaft and said drive shaft, said housing having ears on each of its opposite side walls extending in a direction away from the tractor, each ear having a substantially vertical slot therein, a frame comprising side bars extending from the tractor, said side bars having one end pivotally secured to the tractor and the opposite end fastened by adjustable bolts in the slots in said ears to permit adjustment of the position of the heel portion of said housing relative to said side bars, said frame comprising upwardly extending bars, adjustable means pivotally securing the upper end of the upwardly extending bars to said tractor to raise and lower said frame and the housing carried thereby, connecting bars extending from the tractor having one end of each connecting bar pivotally fastened to said frame and means on the tractor for raising and lowering the connecting bars to raise and lower said frame and thus raise and lower said housing, soil cutting and soil scattering means on said drive shaft, said soil cutting and soil scattering means being positioned exteriorly of said housing on the end thereof adjacent said tractor and a soil deflecting member mounted on a side bar extending laterally therefrom away from said housing and positioned directly above said soil scattering means.

3. A ditching machine comprising in combination, a tractor, a housing extending in a generally longitudinal direction substantially parallel to the length of the ditch to be dug and of a width less than the width of said ditch, a driven shaft arranged to be driven from the drive for said tractor journaled for rotation in the upper portion of said housing, a drive shaft in the lower portion of said housing driven by said driven shaft, said housing forming a substantially gas tight enclosure for said driven shaft and said drive shaft, said drive shaft having one end thereof extending from the end of said housing adjacent said tractor, a soil cutting knife fixed to the extending end of said drive shaft for rotation therewith, radially extending scattering scoops fixed to said drive shaft for rotation therewith, said scattering scoops being positioned between said cutting knife and said housing, said cutting knife having at least two diametrically oppositely positioned, substantially rectangular blades, each having the leading side edge in the direction of rotation extending substantially radially relative to said drive shaft and shaped to provide a knife edge, the marginal area of said blades facing said vehicle being inclined outwardly from the said knife edge towards an intermediate area thereof and each blade extending radially from said drive shaft a distance at least equal to the radial extent of said scattering scoops, whereby upon rotation of said cutting knife, soil is cut a depth equal to the said radial extent of the blades of said cutting knife and as said cutting knife continues to move through said soil, the cut soil is moved by the aforesaid inclination in a direction away therefrom toward the scattering scoops, said machine having side bars extending between said housing and the tractor, and adjustable deflection plates, comprising one plate extending longitudinally adjacent a side bar having one side edge pivoted to said side bar, and a second plate pivoted to the side edge of said first mentioned plate remote from the first mentioned side edge and means for maintaining said plates in angular relation to each other and to said scattering scoops to form a pile of earth adjacent the ditch, said means being constructed and arranged to support the deflection plates in a position where they permit the soil to be thrown by the scoops away from the side of the ditch.

References Cited by the Examiner

UNITED STATES PATENTS

992,866	5/1911	Francis	37—92
1,789,874	1/1931	Lilly.	
2,830,515	4/1958	Zayco	172—108 X
2,942,360	6/1960	Hawkins	37—91
2,974,735	3/1961	Smith	172—108
2,984,023	5/1961	Dugas	37—92
3,041,750	7/1962	Garnand	37—92
3,132,430	5/1964	Barras	37—92
3,168,785	2/1965	Davis	37—92

FOREIGN PATENTS

634,558	1/1962	Canada.
1,092,391	11/1960	Germany.
891,857	3/1962	Great Britain.
567,137	10/1957	Italy.

ABRAHAM G. STONE, *Primary Examiner.*

BENJAMIN HERSH, *Examiner.*

W. B. STONE, W. A. SMITH, *Assistant Examiners.*