W. MAJEWSKI.

ROTARY COMPRESSION MACHINE.

APPLICATION FILED FEB. 8, 1917.

1,272,073.

Patented July 9, 1918.

4 SHEETS—SHEET 1.

Fig. 1.

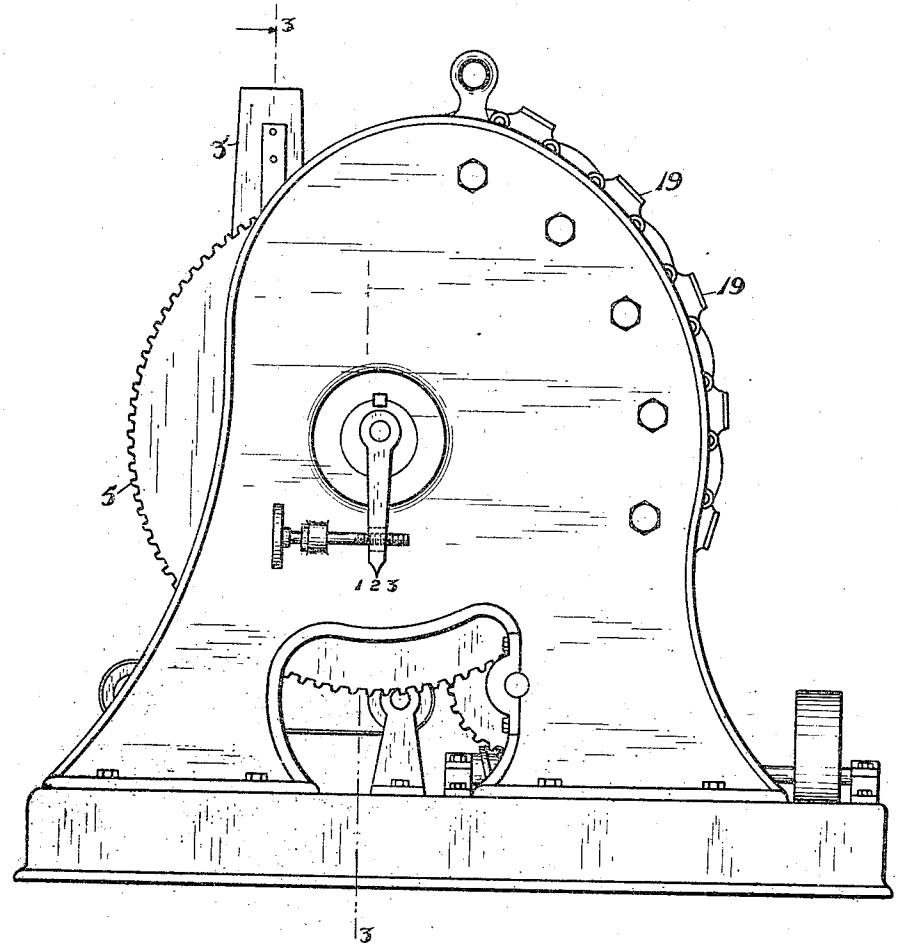

WITNESSES:

F. C. Fliedner

Charles Ackles

INVENTOR

W. Majewski,

BY Strong & Townsend

ATTORNEYS

W. MAJEWSKI.

ROTARY COMPRESSION MACHINE.

APPLICATION FILED FEB. 8, 1917.

1,272,073.

Patented July 9, 1918.

4 SHEETS—SHEET 2.

Fig. 2.

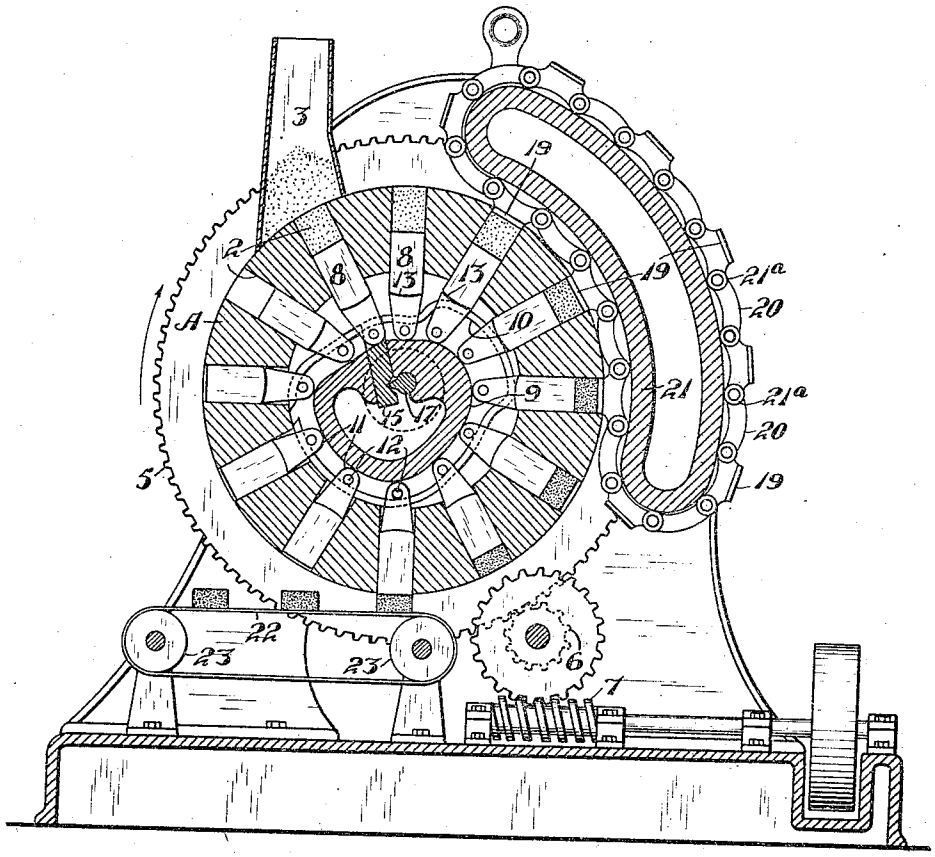

WITNESSES:

F. L. Fliedner

Charles Rekles

INVENTOR

W. Majewski,

BY Strong & Townsend

ATTORNEYS

W. MAJEWSKI.

ROTARY COMPRESSION MACHINE.

APPLICATION FILED FEB. 8, 1917.

1,272,073.

Patented July 9, 1918.

4 SHEETS—SHEET 3.

Fig. 3.

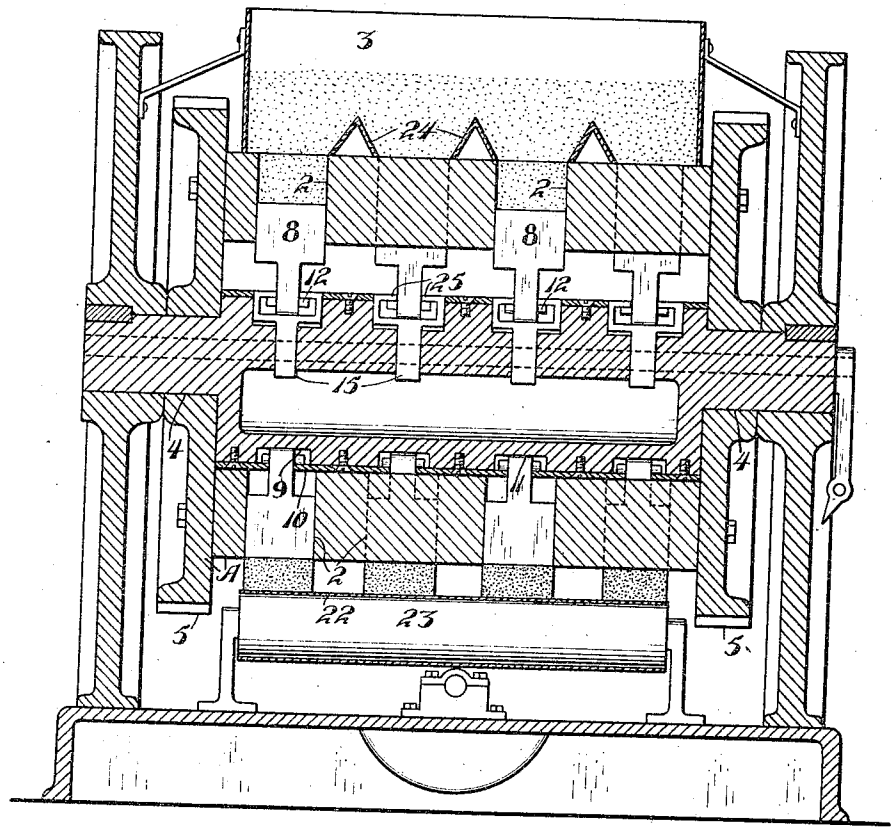

WITNESSES:

F. C. Fliedner

Charles Pickles

INVENTOR

W. Majewski,

BY Strong & Townsend

ATTORNEYS

W. MAJEWSKI.

ROTARY COMPRESSION MACHINE.

APPLICATION FILED FEB. 8, 1917.

1,272,073.

Patented July 9, 1918.

4 SHEETS—SHEET 4.

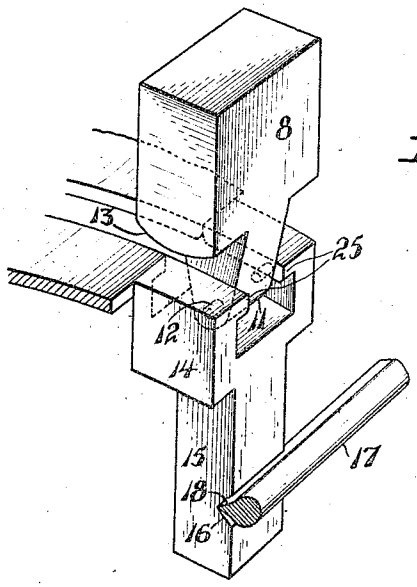

Fig. 4.

Fig. 5.

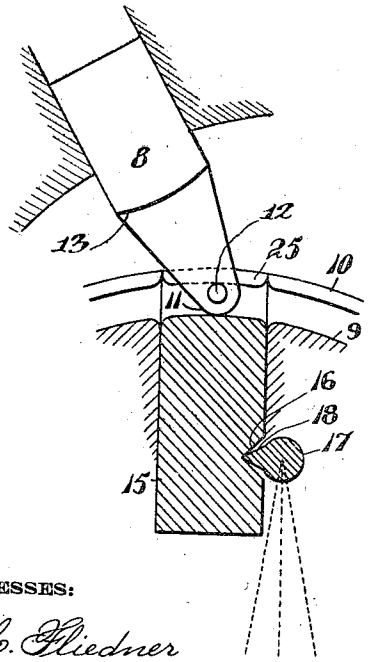

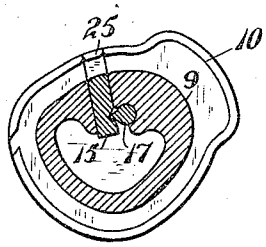

Fig. 6.

WITNESSES:

F. C. Fliedner

Charles Rickles

INVENTOR

W. Majewski,

BY Strong & Townsend

ATTORNEYS

UNITED STATES PATENT OFFICE.

WLADYSLAW MAJEWSKI, OF SAN FRANCISCO, CALIFORNIA.

ROTARY COMPRESSION-MACHINE.

1,272,073. Specification of Letters Patent. Patented July 9, 1918.

Application filed February 8, 1917. Serial No. 147,344.

To all whom it may concern:

Be it known that I, WLADYSLAW MAJEWSKI, a subject of the Czar of Russia, residing at the city and county of San Francisco and State of California, have invented new and useful Improvements in Rotary Compression-Machines, of which the following is a specification.

This invention relates to machines for the compression of plastic materials into bricks, briquets and the like, of the type comprising a rotary drum having radial chambers into which charges of plastic material are successively introduced, radially reciprocated plungers in said chambers, actuated by a central cam or cams, and an abutment between which and the said plungers the charges are compressed, said compressed charges being ultimately expelled on to a traveling belt or conveyer.

The object of this invention is to effect improvements in this type of machine in regard to the actuation of the plungers, whereby positive retraction and expulsion are obtained and the use of retractively operating springs is obviated, in regard to the adjustment of the plungers within the chambers for the regulation of the amount of material received in each, and in regard to the abutment and its operation.

It also comprises details of construction which will be more fully explained by reference to the accompanying drawings, in which—

Figure 1 is an exterior end view of my device.

Fig. 2 is a vertical section transverse to the axis of the machine.

Fig. 3 is a sectional view on lines 3—3 of Fig. 1.

Fig. 4 is a perspective view of a part, showing the plunger and means for regulating the amount of material received in the molds.

Fig. 5 is a part sectional view of the same.

Fig. 6 is a diagrammatic view of the cams.

As shown in the present drawings, A is a rotatable, hollow drum, having in its wall a plurality of radial apertures 2 forming compression chambers which may be arranged in longitudinal rows, so disposed that each in succession may be filled with plastic material from a hopper or chute 3. The axis of the drum is mounted at each end in suitable bearings, as at 4, and has at the ends spur wheels 5, through which power is transmitted from a pinion 6 and worm gear 7, or other equivalent or suitable device by which motion is transmitted to rotate the drum.

A plunger 8 is slidably fitted in each of the radial compression chambers and is withdrawn so as to receive a charge of plastic material when passing the supply hopper, and is afterward forced outward to compress the mass during the subsequent revolution of the drum. The means for operating the plungers consists of irregular cams 9 and 10, one of which is located within the other, and about the center of the hollow drum through which the plungers are caused to reciprocate by the action of these cams. The plungers have shoulders 13 which travel upon the surface of the cam 10 to force them outward to compress the charges received in the chambers 2. The inner ends of the plungers are tapered, interiorly to the shoulders 13, and may be rounded or otherwise formed, as shown at 11, so that these ends traveling against the surface of the inner cams will control the inward movements of the plungers to follow the contours of the cams 9 and 10, when retracted.

Each of these inner ends has a pin 12 passing through it and adapted to move between the inturned flanges of the inner periphery of the cam 10 and the outer surface of the cam 9 to guide the plunger movements in reciprocating; and also to regulate the charge in each plunger chamber, as hereafter described.

The plastic material which is being operated upon may be of different qualities of plasticity, and in order to regulate the amount of material which is admitted into each plunger chamber, I show a means for adjusting these plungers for a greater or less amount of material to be received. As shown in Figs. 4 and 5, these plungers have narrow extensions which pass between the flanges of the compression cam 10, which shoulders serve to receive the thrust of compression in the formation of the bricks,

The inner ends of the plunger extensions are received in the head of a radially adjustable member 14, the latter having an inwardly extending shank 15, which has a V-shaped notch 16 formed in one side of it.

Upon a shaft 17, journaled in the cam 9 contiguous to the extension 15, is formed a projection or cam 18 which is adapted to enter and coact with the groove 16, so that by turning this shaft the shank 15 will be acted upon to move the plunger outward or inward, so that as it passes the supply hopper it will receive less or more of the material, depending upon the consistency of the latter. This movement is effected by means of pins 12 projecting from each side of the end of said plunger extension, and these pins pass through a channel formed in the head of the shank 15 and engage inturned flanges 25 of said shank at the instant when the plunger chamber is in line to receive a charge from the hopper. The movement of the shank 15, actuated by the adjusting cam 18, controls the amount of material admitted to the plunger chamber.

The opposing or compression surface consists of a series of compression plates 19, which are connected together by links 20, so as to form an endless chain; the links being of such a length that the plates 19 will be brought to register with the chambers 2, after the latter have been filled with the plastic material. In order to direct these plates properly, I have shown a segment 21, so mounted with relation to the drum and the plunger chambers that its interior curvature forms a support for the plungers, which plungers are in register with the plunger chambers while the plungers are being moved outwardly to compress the brick, as plainly shown in Fig. 2.

The links carrying the plates 19 and their connections are here shown as made convex, and the ends at which the links are connected are provided with rollers 21^a, so that when, during the revolution of the drum, the plates are brought to register with the plunger chambers, these rollers will travel against the interior of the segment and will thus prevent undue friction during the passage.

It will be understood that any equivalent form of support, between which and the drum the compression plates may pass, will similarly act to resist the outward force of the plungers as effected by the action of the interior cams, and that in this manner each brick will be properly compressed, and preferably by the continued action of the cams while the bricks are passing through the compression mechanism.

When the bricks have been fully compressed, the plungers are caused to move outwardly by contact with the outer surface of the inner cam which then forces them out after leaving the compression element 21, and with them the bricks which may be delivered upon a suitable carrying belt 22, which is mounted to travel upon drums 23 journaled in proper proximity with the plunger-carrying drum. When the drum is rotated to a point where the bricks have been delivered and the plungers are at their extreme outward movement, the outer cam 10, acting upon the pin 12, will commence to retract the plungers; and when the plunger chambers have again begun to register with the feed hopper 3 the plungers will be retracted so as to receive the required amount of plastic material, this amount being regulated, as previously described, by the adjustment caused by the notched shank 15 and the engaging cam 18.

In order to properly direct the plastic material into the chambers I have shown divergent hoods 24, located in the feed hoppers and so placed that the plastic material passing over these hoods will be directed into the plunger chambers.

Having thus described my invention, what I claim and desire to secure by Letters Patent is—

1. In combination with a drum having radial compression chambers and reciprocating plungers therein, an inner cam, an outer cam spaced from the inner cam, said cams having a radial cut-out, a rigidly formed member slidable in the cut-out and having a face corresponding to the inner cam and spaced side flanges overlying said face and corresponding to the outer cam, said plungers having their inner ends formed to be received in the space between the flanges of said member and to directly engage said inner cam and said face of said member, pins on the plungers engaging the flanges of said members and the outer cam, shoulders on the plungers, said outer cam having a bulged part to engage said shoulders to effect the compressing movements of the plungers, said member having a notch in a side thereof, a shaft journaled in the inner cam, and a projection on the shaft engaged in said notch to effect sliding of said member.

2. In combination with a drum having radial compression chambers and reciprocating plungers therein, an inner cam, an outer cam spaced from the inner cam, said cams having a radial cut-out, a member slidable in the cut-out and having a face corresponding to the inner cam and side flanges overlying said face and corresponding to the outer cam, said plungers having their inner ends formed to directly engage said inner cam and said face of said member, pins on the plungers engaging the flanges of said member and the outer cam, shoulders on the plungers, said outer cam having a bulged

part to engage said shoulders to effect the compressing movements of the plungers, and means carried by the inner cam and engaging said member to effect adjustment thereof in said cut-outs.

In testimony whereof I have hereunto set my hand in the presence of two subscribing witnesses.

WLADYSLAW MAJEWSKI.

Witnesses:
JOHN H. HERRING,
W. W. HEALEY.