S. M. VALDES.

ELECTRIC WATER HEATER.

APPLICATION FILED NOV. 28, 1916.

1,265,554. Patented May 7, 1918.

Fig. 1.

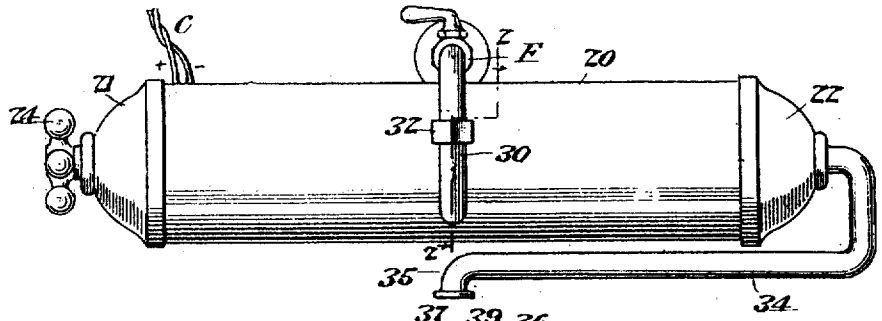

Fig. 2.

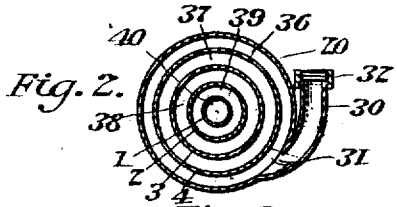

Fig. 3.

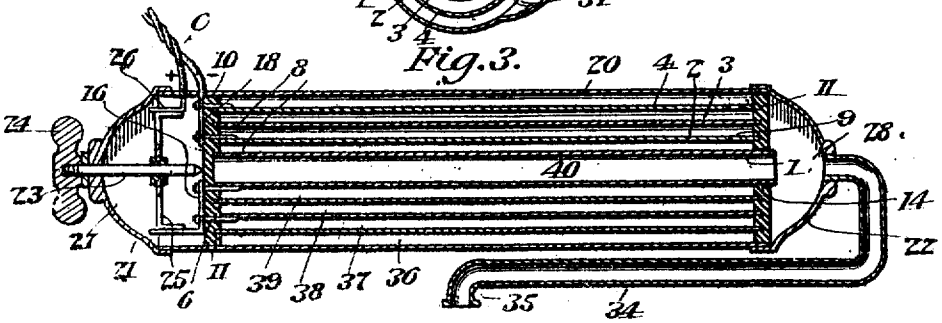

Fig. 4.

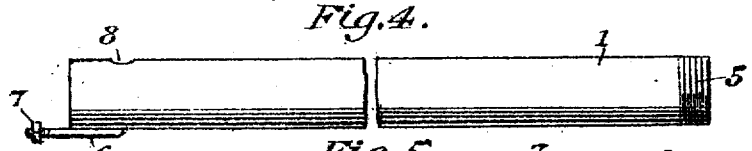

Fig. 5.

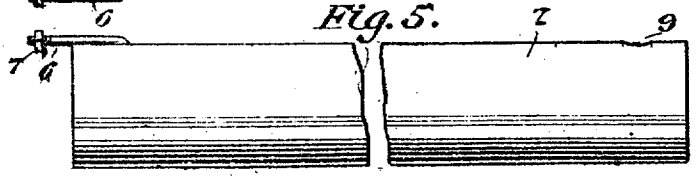

Fig. 6.

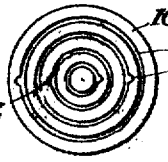

WITNESSES

M. A. Shifer

N. L. Collamer

INVENTOR

Salvador M. Valdes

BY Victor J. Evans

ATTORNEY

UNITED STATES PATENT OFFICE.

SALVADOR M. VALDES, OF SAN ANTONIO, TEXAS, ASSIGNOR OF ONE-HALF TO F. H. SEIBER AND MRS. EVA H. KUHN.

ELECTRIC WATER-HEATER.

1,265,554. Specification of Letters Patent. Patented May 7, 1918.

Application filed November 28, 1916. Serial No. 133,909.

To all whom it may concern:

Be it known that I, SALVADOR M. VALDES, a citizen of the United States, residing at San Antonio, in the county of Bexar and State of Texas, have invented new and useful Improvements in Electric Water-Heaters, of which the following is a specification.

This invention relates to electric water heaters wherein spaced pole pieces or terminals in the circuit are put into electrical connection with each other by the water which passes between them and therefore serves as a resistance element.

Among the objects of the present invention is the employment of such a device within a metallic shell or casing which, however, does not come into electrical connection with the live wire of the circuit, and therefore the user gets no shock.

Another object is to provide for the flow of the water through the device in a tortuous course both longitudinally and circumferentially so as to bring it into contact intimately with both faces of all pole pieces as far as possible.

Other objects will appear in the following specification and claim, reference being had to the accompanying drawings wherein—

Figure 1 is a front elevation of this invention,

Fig. 2 is a cross section on the line 2—2 thereof, and

Fig. 3 is a longitudinal vertical section.

Figs. 4 and 5 are side elevations of two of the pole pieces or tubular electrodes, and

Fig. 6 is an elevation of one of the disks.

In my invention as illustrated in Figs. 1 to 6 inclusive, the numerals 1, 2, 3 and 4 designate pole pieces or electrodes formed in the shape of tubes nested within and yet out of metallic contact with each other, and while I have shown four such tubes (see Fig. 4) I would not be limited in this respect. The innermost and smallest tube 1 is slightly longer than the others and is threaded at one extremity as seen at 5. At their opposite extremities all tubes, including this one, have binding posts in the shape of bolts 6 with nuts 7 thereon. Near the left end of the innermost tube 1, and of all others which would bear odd reference numerals (and which are connected with the live wire of the circuit as explained below) is a hole 8; and near the right ends of the tubes which are connected with the return wire of the circuit are holes 9. In Fig. 3 I have shown the various tubes as so arranged that all these holes are above the axis of the entire device for a purpose yet to appear, but it is clear that by a different disposition of the tubes axially a different arrangement of the holes would result, causing a different tortuous course to be followed by the water as explained below. Against one end (here the left end) of the tube is disposed a disk 10 of insulating material impervious to water, the same being provided with a series of annular grooves 11 for receiving the left extremities of the tubes, and at proper points with holes 12 through which pass the bolts 6 so that the nuts 7 may be applied to their outer ends to hold the tubes in the grooves. Against the opposite extremities of the tubes is disposed a second and similar disk provided with like grooves 11 although the holes 12 are absent, and this disk has a central threaded aperture 14 into which the threaded extremity 5 of the innermost tube engages for the obvious purpose of holding all the tubes properly spaced from each other by the grooves in the disks, and both the disks upon the extremities of the tubes as best seen in Fig. 3. The binding posts of every other tube beginning with the innermost are electrically connected outside the left disk 10 as at 16, and the posts of the intermediate tubes are also connected as at 18, and the connecting straps are themselves respectively connected with the live and return wires in the cable C. Care should be taken that the outermost cylinder of this series (numbered 4 in Fig. 3, although it would bear an even reference numeral if there were a larger number) shall be connected with the return wire of the cable, for reasons which will be explained below.

The series of tubes above described is now inserted into a metallic shell or casing 20 of tubular shape which is of greater internal diameter than any of the tubes and into which the disks 10 and 13 fit closely so that the shell is insulated from the tubes, the shell being also of greater length than any of the tubes and projecting beyond their left ends and their binding posts 6, for a purpose to be explained. Upon the extremities of this shell are mounted cupped heads or caps 21 and 22, the former shown in Figs. 1 and 3 as including a switch or circuit closer of any appropriate type. As best seen in

Fig. 3 the switch stem 23 extends through the center of the head 21 and carries a handle or key 24 on the exterior of the same, and within said cupped head such stem carries an arm 25 whose extremities are adapted to simultaneously make contact with the connecting piece 16 and a plate 26 at the inner end of the live wire, or to be thrown out of contact with both of them by turning the stem by means of the key. The return wire being in constant contact as at 18 with the return tubes, when the live wire is thrown into contact with the live tubes the circuit is complete as will be explained. I do not wish to be limited, however, to this specific form of switch or circuit closer, nor to its exact location; but attention is directed to the fact that between the left disk 10 and the cupped head 21 is a chamber 27 surrounded by the left end of the casing 20, in which stand the terminals or binding posts of the tubes or electrodes, the extremities of the wires from the cable, and the switch; and no water ever enters this chamber. A similar but small chamber 28 is formed by the other head 22 for a purpose to be explained.

With my invention the water should be admitted to the bottom of the casing. By preference I use an inlet pipe 30 whose lower end communicates with a hole 31 in the shell or casing as best seen in Fig. 2, and whose upper end has a coupling 32 by means of which it may be attached to an ordinary spigot of faucet F. Connected as at 33 with the outer end of the right hand head 22 is an outlet pipe 34 which is preferably carried down around and under the casing, and inward to about the center of the same where it delivers at the point 35 directly under the mouth of the faucet; and therefore when this attachment is applied to the latter the water will be delivered at the same point as from the faucet, but a little lower. When the faucet is opened, the course of the water is as follows: Entering the bottom of the casing at about the center of the length thereof as indicated at 31 in Fig. 2, the water flows into the space 36 between the casing and the outermost tube 4 which, as above stated, is connected with the return wire of the cable, fills this space longitudinally and then rises within the shell around both sides of the tube until it reaches the hole 9 at the top of the latter. Through this hole it flows into the second space 37 between the tubes 4 and 3, and at one end of both tubes because the hole 9 is at one end of the tube 4. Falling on the tube 3, the water flows around the same into the bottom of the space 37, wherein it flows longitudinally within the outer tube 4 and fills up the sides of the space until it establishes an electrical connection or short circuit between these tubes or electrodes so that the current may pass through the water which latter forms a resistance element and therefore becomes heated to an extent. In similar manner the water now banks up within the annular space between the tubes 4 and 3 until it nearly fills the same, when it passes through the hole 8 at the left end of the tube 3 and drops into the next space 38 between this tube and the tube 2; herein it follows substantially the same course as above described, and finally flows into the space between the tubes 2 and 1, as indicated at 39. This is continued throughout the entire series of tubes whether there be more or less than as shown, and eventually the water in a highly heated condition flows through the innermost hole 8 into the bore 40 of the innermost and smallest tube 1, whence it passes into the chamber 28 within the right hand cupped head 22, and flows along the outlet pipe 34 to the point 35 where it is delivered hot for use. If the left hand disk 10 fits tightly within the casing 20 as I intend, no water may flow into the chamber 27 beyond it, and therefore neither the wires nor the switch can be corroded or short circuited. The switch is moved by turning the key 24 from the exterior, and the current can be cut off without interrupting the flow of water; therefore when the current is on warm water flows from the outlet 35, and when the current is off cold water may be drawn as soon as the warm water within the device has passed through it. The degree of heat imparted to the water flowing through this device is dependent on the number of tubes within the series, their dimensions, the temperature of the water flowing from the faucet F, and the strength of the current. Excepting the disks and insulating elements, the device may be made entirely of metal and the user cannot be shocked by placing his hand anywhere on the exterior. While I have shown the series of disks and casing as disposed in a horizontal position in Fig. 1, and will doubtless employ that construction and arrangement when the device is applied to the spigot or faucet within a bathtub or the like, it is of course quite possible to arrange it in other ways to adapt it to the uses to which it is to be put. Obviously, also, it is not necessary that the holes 8 and 9 shall all be at the top, and by setting the various tubes differently on their axes within the grooves of the two disks it is clear that the water could be compelled to follow a tortuous course circumferentially of the battery, although the alternate disposition of the holes 8 and 9 at opposite ends of the battery will compel the water always to follow a tortuous course longitudinally thereof.

What is claimed as new is:

In a water heater, the combination with a horizontal cylindrical metallic shell having a water inlet in one side, insulating disks

fitting closely within the shell near its ends, one of them having a water outlet opening and both of them having concentric grooves in their faces, a series of concentric nested metallic tubes disposed within the shell with their extremities in said grooves and one extremity of the innermost tube projecting through said opening, the tubes being provided with staggered water openings, and projections on one end of said tubes passing through the remaining disk; of cupped heads fitted to the extremities of the said shell and with the disks respectively producing chambers whereof one is in communication with the central tube, a water-outlet pipe communicating with the head of this chamber, connections within the other chamber between the projections of certain tubes including the outermost, connections between the projections of the remaining tubes including the innermost, feed and return wires leading into this chamber, the return wires being attached to the said first-named connections, and a switch located within this chamber between the feed wire and the other connections and with its handle projecting beyond the head, for the purpose described.

In testimony whereof I affix my signature.

SALVADOR M. VALDES.