US 20090071040A1

(19) **United States**

(12) **Patent Application Publication**

(10) **Pub. No.: US 2009/0071040 A1**

(43) **Pub. Date: Mar. 19, 2009**

Fergus

(54) **FELT SOLE WITH IMPROVED TRACTION**

(76) Inventor: **Derek Fergus**, Salem, OR (US)

Correspondence Address:
Bruce E. Harang
PO BOX 872735
VANCOUVER, WA 98687-2735 (US)

(21) Appl. No.: **11/856,329**

(22) Filed: **Sep. 17, 2007**

Publication Classification

(51) **Int. Cl.**
A43B 13/14 (2006.01)
A43B 13/00 (2006.01)
A43C 15/00 (2006.01)

(52) **U.S. Cl.** ..... **36/25 R**; 36/59 C

(57) **ABSTRACT**

An improved traction felt sole for footwear. The felt sole having integral downwardly extending protrusions located over the bottom surface of the felt sole. The downwardly extending protrusions may all have the same shape or they may have different shapes arranged in a desired pattern upon the bottom surface of the sole.

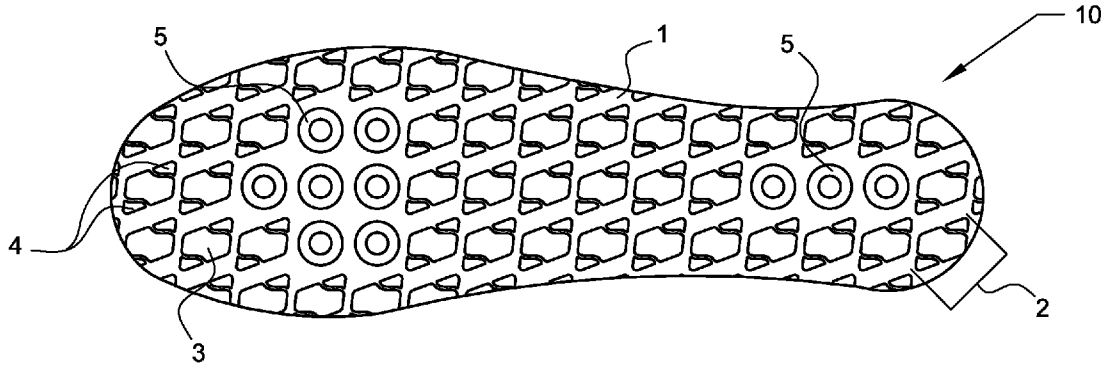

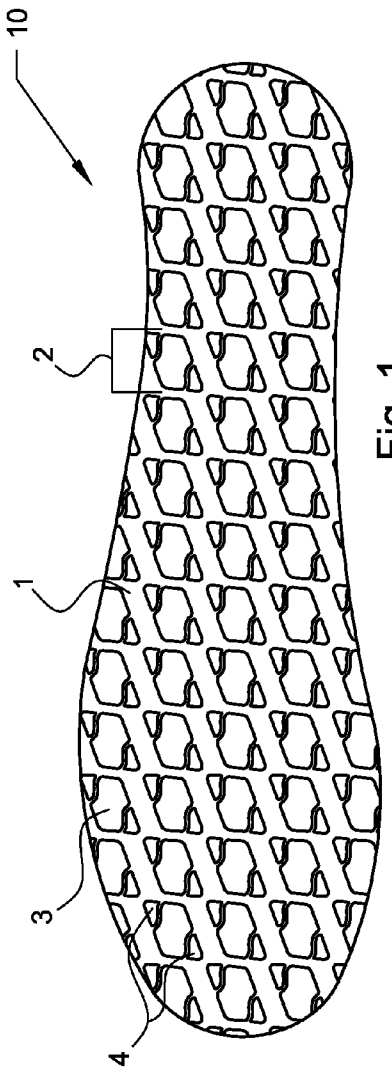

Fig. 1

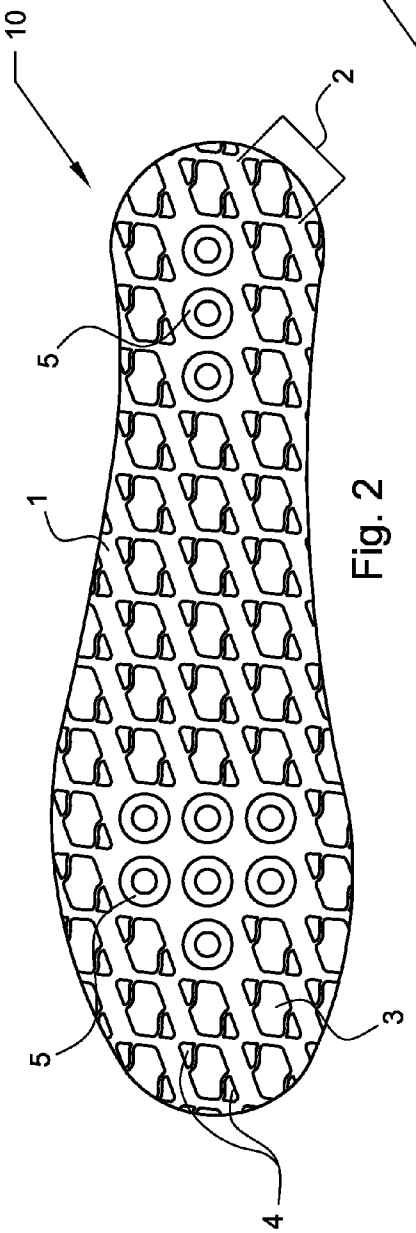

Fig. 2

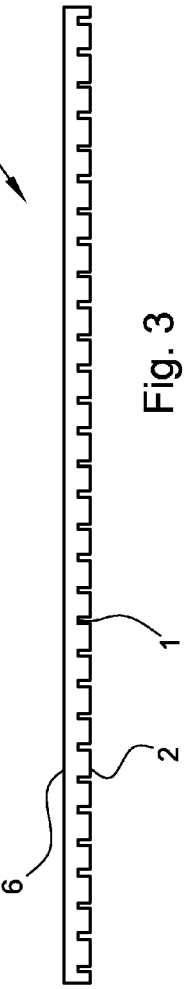

Fig. 3

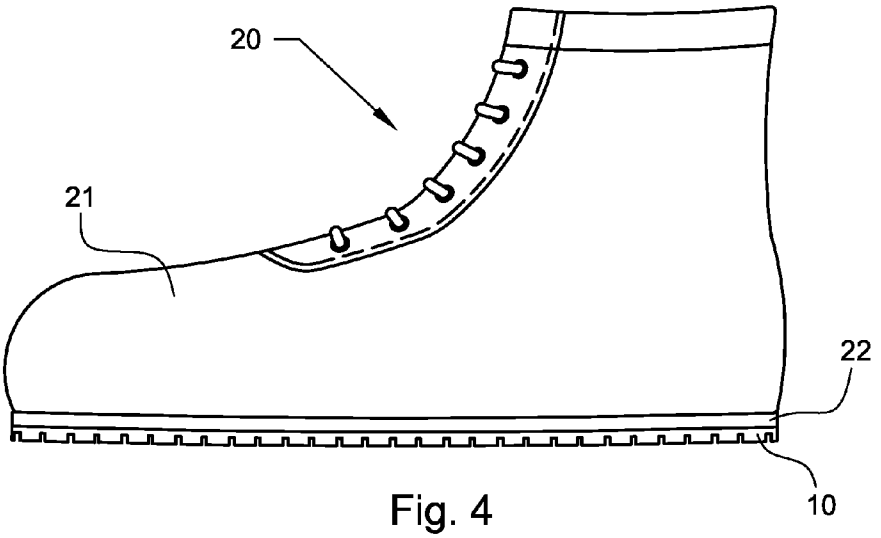

Fig. 4

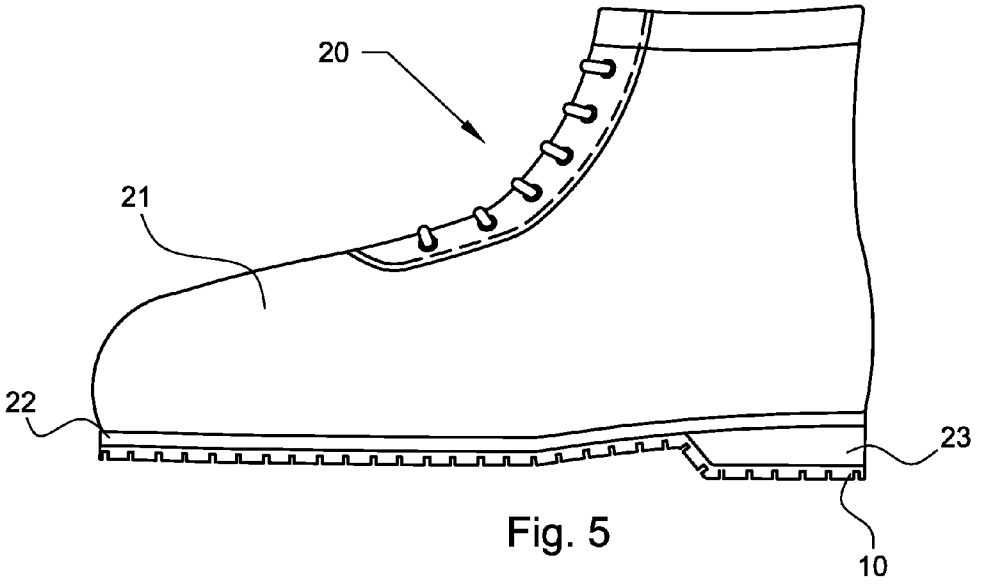

Fig. 5

FELT SOLE WITH IMPROVED TRACTION

BACKGROUND OF THE INVENTION

[0001] 1. Field of the Invention

[0002] The present invention generally relates to felt footwear soles having improved traction and more particularly to felt soles having improved traction for use on wading footwear.

[0003] 2. Description of the Related Art

[0004] It has been a long-standing problem that shoes and boots need to have the best grip possible so that the user can travel over rough and or slippery surfaces without loosing footing. One of the areas in which this has been most necessary is for fishermen, who are often stepping on submerged rocks, which have been made smooth by the flow of water and have been made additionally hard to stand on due to a layer of algae or slime that can form upon the such objects within a stream as well as the rock portions of the streambed itself.

[0005] Various methods have been employed to enhance the traction of boots, shoes, and sandals, especially for purposes of fishing and other water sports. The fishing footwear referred to can be fishing waders, which comprise boots attached to pants that typically extend to mid-thigh or chest. Other fishing boots are approximately ankle high boots that are worn on the outside of waterproof stocking foot waders. Likewise, fishing sandals can be worn over these stocking foot sandals. The water proof waders can extend to mid-thigh, waist, or chest. Additionally, these types of wading footwear can be worn along without waders. Footwear for fishing has attempted to increase the traction for the user by having a sole made of flat surfaced felt. The felt has many fibrous connections which are thought to be the basis for the greatly increased the traction on slippery surfaces.

[0006] Another traction type sole is a polymeric sole having a high traction imprinted or molded pattern on the surface of the sole of the footwear. This can be in the form of ridges, grooves, protruding nubbins or blocks, or any number of surface textures built into the bottom of the sole of the footwear. Also known are polymeric materials for forming soles having gripping characteristics of rock climber shoes with a traction pattern imprinted on them. All of these attempts to improve the traction of the wading footwear are useful, but further increase in traction is needed.

[0007] Still another attempt at increasing the traction of footwear is to have a material that is harder than the footwear sole surface protruding from the footwear. This can be by screw-in metal studs or by metal protrusions that attach to the sole in some way. Metal protrusions or studs can increase traction in situations, but in other situations actually reduces traction. A better all around traction providing sole is still needed.

DISCLOSURE OF THE INVENTION

[0008] The present invention provides advantages and alternatives over the prior art by providing a sole for water sport footwear, particularly wading footwear, and the like which is especially useful for walking on slippery surfaces without the need for studs or special formulation polymeric sole compositions.

[0009] According to a further aspect of the present invention there is provided a felt footwear sole having a traction pattern for improving traction without the need of sewing multiple pieces to form a complete sole.

[0010] According to yet another aspect of the present invention there is provided a felt footwear sole having a traction pattern for improving traction that may be attached to footwear using standard felt sole attaching means.

[0011] According to still another aspect of the present invention there is provided a felt footwear sole having a traction pattern molded into the felt for improving traction that may be attached to footwear using standard felt sole attaching means.

[0012] The present invention thus advantageously provides a one piece felt traction sole for attaching to footwear using known felt sole attachment technology and which further may be attached to a flat mid-sole or attached to a mid-sole having a heel elevation.

BRIEF DESCRIPTION OF THE DRAWINGS

[0013] FIG. **1** shows a plan view of the bottom traction patterned surface of a felt traction sole, where all of the protrusions have the same shape, of the present invention.

[0014] FIG. **2** shows a plan view of the bottom traction patterned surface of a felt traction sole, where the protrusions comprise a pattern of two different shapes, of the present invention.

[0015] FIG. **3** shows a show a plan side view of a felt traction sole of the present invention.

[0016] FIG. **4** shows a wading boot having a flat mid-sole surface with the felt traction sole of the present invention mounted thereto.

[0017] FIG. **5** shows a wading boot having a heel elevation mid-sole surface with the felt traction sole of the present invention mounted thereto.

DESCRIPTION OF THE PREFERRED EMBODIMENTS OF THE INVENTION

[0018] Reference will now be made to the drawings, wherein to the extent possible like reference numerals are utilized to designate like components throughout the various views. Referring to FIG. **1**, which presents a felt traction sole **10** of the present invention having sole bottom surface **1** into which a plurality of downwardly extending, spaced apart protrusions **2** are formed as an integral part of said felt traction sole **10** bottom. Protrusions **2** are illustrated as having a desired pattern of larger protrusion members **3** each having associated with it a pair of smaller protrusion members **4**. It is to be understood that the design of the traction pattern protrusions may comprise single protrusions or groupings of at least two associated protrusion members. The protrusions **2** are most preferably formed by molding them into the felt sole blank.

[0019] Referring now to FIG. **2**, there is shown a felt traction sole **10** of the present invention having a sole bottom surface **1** into which a plurality of downwardly extending spaced apart first set of protrusions **2** are formed as an integral part of said felt traction sole **10** bottom. The presently preferred method of forming said protrusions is by molding using heat and pressure in a forming mold. Protrusions **2** are illustrated as having a desired pattern of larger protrusion members **3** each having associated with it a pair of smaller protrusion members **4**. In addition, there is illustrated the use of a second set of protrusions **5** having a different shape forming a second desired pattern overlaid on the first desired pattern of protrusions **2** and also formed as an integral part of said felt traction sole **10** bottom.

[0020] Referring to FIG. **3**, there is shown a side view of the felt traction sole **10** showing the sole bottom surface **1** having downwardly extending protrusions **2** as well as sole top surface **6**.

[0021] Turning now to FIGS. **4** and **5**, there is shown FIG. **4** a conventional wading boot **20** having an upper **21**, a mid-sole **22**, and the felt traction sole **10** of the present invention. FIG. **5** shows a conventional wading boot having a heel platform **23** attached to a mid-sole **22** which in turn is attached to a wading boot upper **21** of a conventional wading boot **20** with the felt traction sole **10** of the present invention attached to the mid-sole and heel platform. The construction of the wading boot upper **21**, the mid-sole **22**, and the heel platform are of materials and by processes well known in this art.

[0022] The presently preferred manufacturing processes by which the soles of this invention are made will now be described. A flat felt sheet is introduced into a hot press mold having the desired traction pattern, in reverse, on one interior surface of the mold. The hot press mold is closed and sufficient pressure and heat are applied to mold form the desired pattern in one surface of the flat felt sheet. Presently preferred temperatures are about 150° C. at about 9 psi. The traction patterned felt is then removed from the hot press mold and cut into the desired shape and size to attach to a footwear mid-sole using convention attaching techniques. It is to be understood that the hot press mold can be designed to make a single improved traction felt sole at one time, or preferably, a sheet of improved traction felt that can be cut into at least one sole. The presently preferred felt material is high density felt, most preferably polyester base high density felt having a thickness of from about 6 mm to about 20 mm.

[0023] It is also to be understood that other known methods of creating the traction pattern in one surface of the flat felt sheet may be used. These include, for example, cutting or laser burning the pattern into one surface of the flat felt sheet.

[0024] One particularly preferred embodiment of the present invention provides an improved traction felt sole for use on footwear having a traction pattern comprised of a single traction protrusion shape.

[0025] Another particularly preferred embodiment of the present invention provides an improved traction felt sole for use on footwear having a traction pattern comprised of at least two different protrusion shapes in a desired pattern arrangement.

[0026] Although the preferred embodiments of the present invention has been disclosed, various changes and modifications may be made without departing from the scope of the invention as set forth in the appended claims.

What is claimed is:

1. A sole comprising: a relatively hard fiber felt sole body having a top surface adapted to be affixed to a mid-sole, said sole body also having a bottom surface, a plurality of downwardly extending, spaced apart protrusions being formed as an integral part of said relatively hard felt sole bottom surface.

2. The sole as claimed in claim **1** wherein said spaced apart protrusions are formed by molding.

3. The sole as claimed in claim **1** wherein said spaced apart protrusions all have substantially the same shape.

4. The sole as claimed in claim **1** wherein said spaced apart protrusions comprise protrusions having at least two different shapes.

5. The sole as claimed in claim **1** wherein said spaced apart protrusions comprise an associated group of at least two different shaped protrusion members.

6. A sole comprising: a relatively hard polymeric fiber felt sole body having a top surface adapted to be affixed to a mid-sole, said sole body also having a bottom surface, a plurality of downwardly extending, spaced apart protrusions being formed as an integral part of said relatively hard felt sole bottom surface.

7. The sole as claimed in claim **6** wherein said spaced apart protrusions are formed by molding.

8. The sole as claimed in claim **6** wherein said spaced apart protrusions all have substantially the same shape.

9. The sole as claimed in claim **6** wherein said spaced apart protrusions comprise protrusions having at least two different shapes.

10. The sole as claimed in claim **6** wherein said spaced apart protrusions comprise an associated group of at least two different shaped protrusion members.

* * * * *