Feb. 14, 1967 K. McCONNELL 3,303,937

PALLET RACK

Filed Sept. 9, 1964 2 Sheets-Sheet 1

Fig. 1.

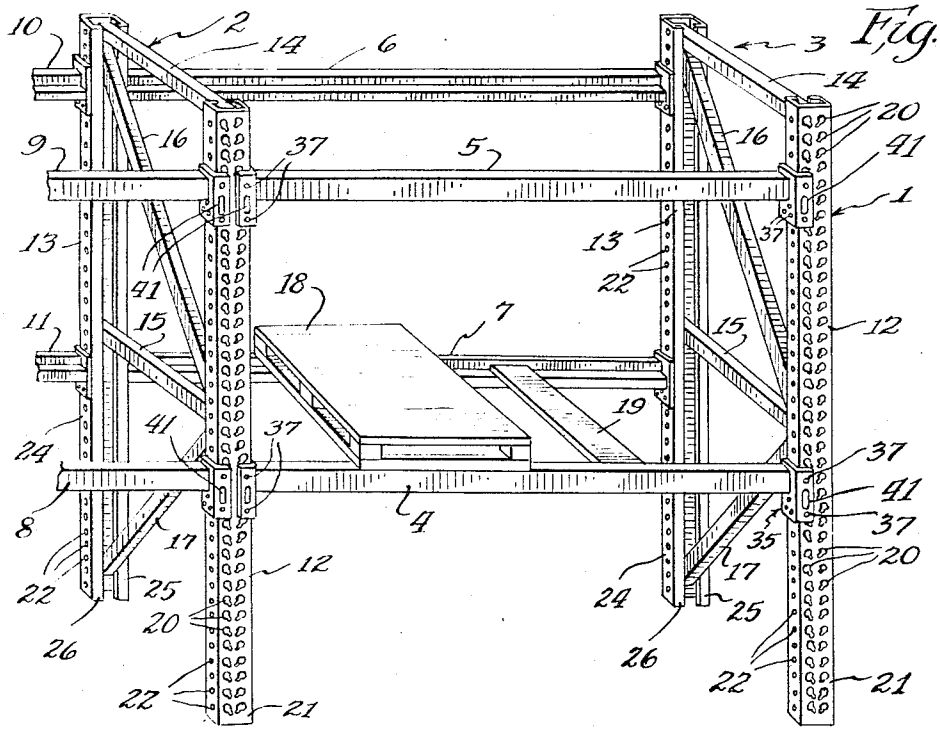

Fig. 3.

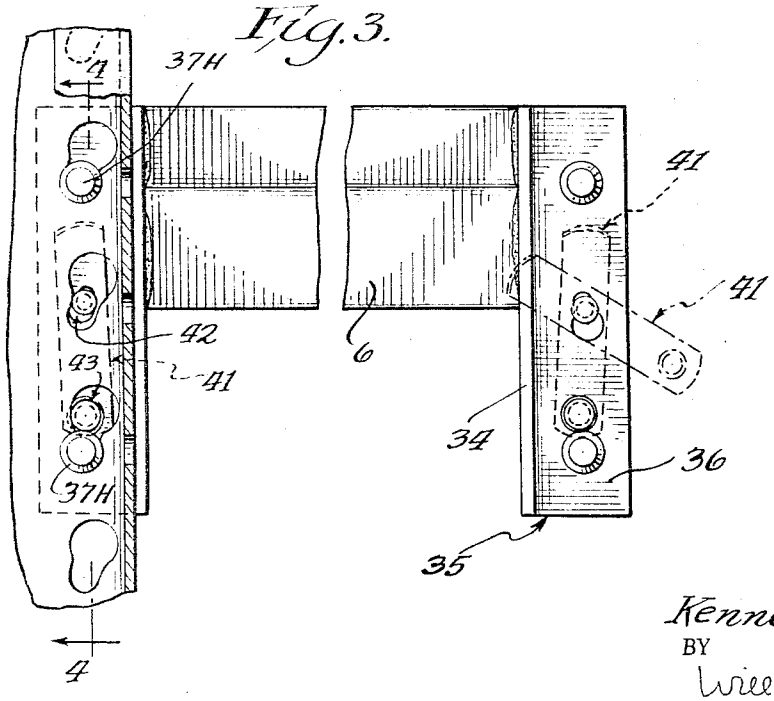

INVENTOR.
Kennedy McConnell
BY
William P. Porcelli
Attorney.

Feb. 14, 1967 K. McCONNELL 3,303,937

PALLET RACK

Filed Sept. 9, 1964 2 Sheets-Sheet 2

Fig. 2.

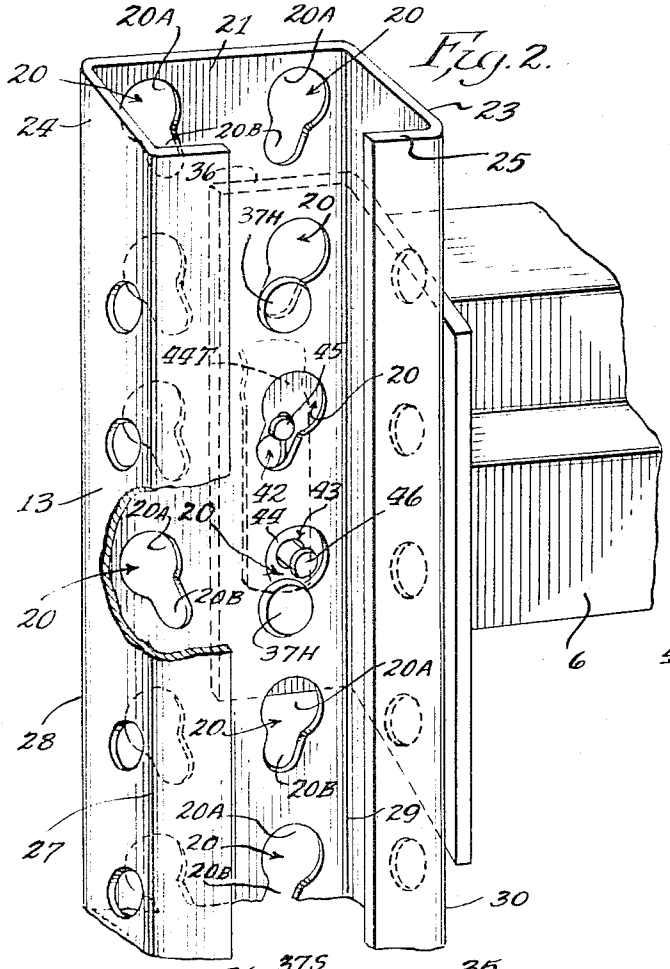

Fig. 4.

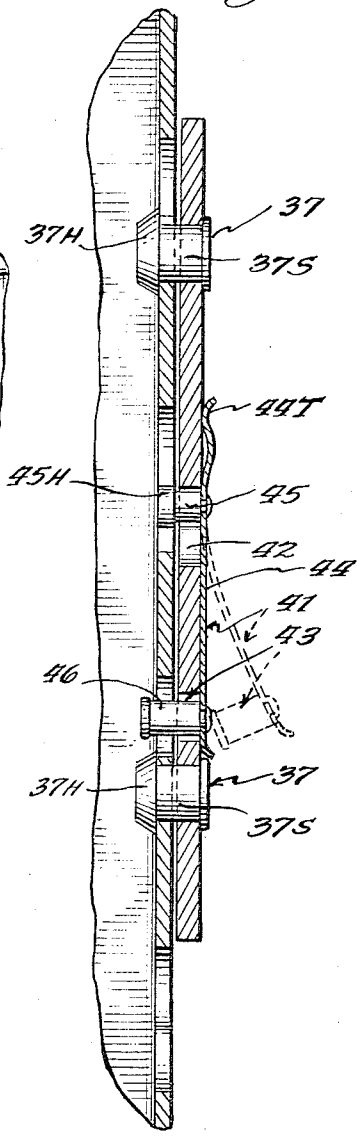

Fig. 5

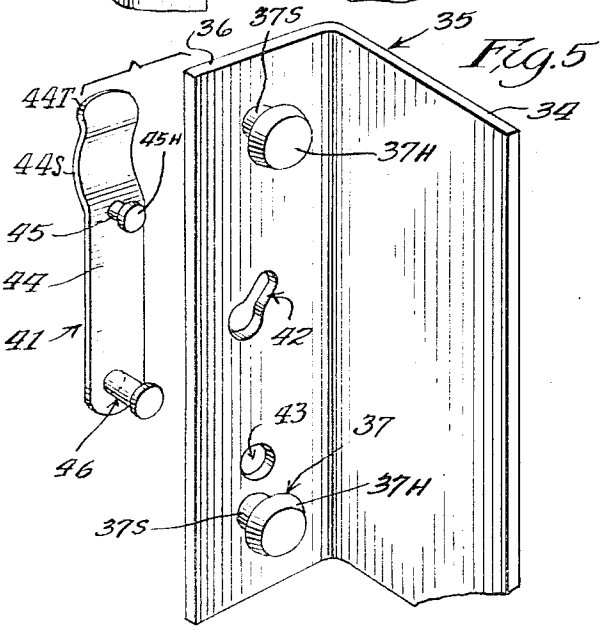

INVENTOR.
Kennedy McConnell.
BY
William F. Porcelli
Attorney.

United States Patent Office 3,303,937 Patented Feb. 14, 1967

3,303,937

PALLET RACK

Kennedy McConnell, Riverdale, Ill., assignor to Interlake Steel Corporation, a corporation of New York

Filed Sept. 9, 1964, Ser. No. 395,135
8 Claims. (Cl. 211—148)

This invention relates to the art of support structures, particularly to a collapsible shelf structure adapted for supporting palletized loads, of a type commonly referred to as a pallet rack.

The use of pallets or skids secured as supports for loads of all varities of materials has been on the increase in recent years. The skid or pallet not only supports the load, but it permits the forks of a lift truck to be inserted below it in order to allow the palletized load to be conveniently transported from place to place as required. Due to the increased use of palletized loads, a definite need arose for a supporting structure which can support a maximum number of palletized loads in a minimum space at a minimum cost.

Structures for this purpose have been developed. They are generally in the form of vertical upright members joined together by horizontal side to side and front to back members which form an open type skeletal structure. The vertical members are made long enough to support the horizontal members at vertically spaced intervals to provide a multi-tiered structure for supporting palletized loads at different stacked levels. Also, the vertical members are spaced horizontally from each other by calculated amounts to establish bays of given length to accommodate a given number of palletized loads in a row without waste of space on the pallet rack structure. Within reason, the structures can be made of any length and any height depending upon the particular storage space available.

The principal features of importance in a pallet rack structure are ease of assembly and disassembly, speed of assembly and disassembly, rigidity of the completed structure against accidental impact, and stability of the completed structure against accidental disassembly.

Accordingly, pallet rack structures, as conventionally provided, are comprised of two basic components, vertical supports or uprights and horizontal beams which are connected thereto. The connections between the beams and uprights are by flanged lugs or attachment posts projecting from vertical end plates that are fixed on the beams to make contact with the uprights along two different planes. The attachment posts may easily be engaged in slanted key hole slots in the uprights as the beams are located in bridging relation between the uprights.

The principal object of the present invention is the provision of a removable one-piece spring clip lock mounted on an end plate and engageable with a corresponding upright to provide a safety means for preventing accidental removal of the beam from its mounted position on the upright.

Another object is the provision of a removable one-piece spring clip lock that may be preassembled to the beam end plate during shipment and storage so that the lock is not a loose part in the usual sense.

Still another object is the provision of a removable one-piece spring clip lock mountable on a beam end plate portion that overlies and exposed face of an upright to locate the lock in a position to improve the overall frame rigidity and to facilitate a visual check of its proper engagement.

While loose parts are avoided wherever possible, one advantage of a removable one-piece lock in accordance with the present invention, resides in the fact that it is easily replaceable. Thus, it is feasible to mount it in

an exposed position to guarantee easy visual checking of its engagement.

A further object of the invention is the provision of a lock cooperating only between the upright and end plate so that beam variations in size and width and cross sectional shape do not affect the lock structure, the lock mounting, or the lock action.

Other objects and disadvantages of the invention should be apparent upon reference to the accompanying drawings in which:

FIG. 1 shows a perspective view of a partially cut away pallet rack structure embodying the features of this invention;

FIG. 2 shows a partially cut away enlarged perspective view of a portion of the pallet rack structure of FIG. 1 showing the region of connection between the end of a beam and an upright;

FIG. 3 shows an enlarged partially cut away and sectional elevation view of a beam connected to an upright;

FIG. 4 shows an enlarged sectional view along the line 4—4 of FIG. 3; and

FIG. 5 is an exploded perspective view illustrating a preferred form of spring clip lock in association with an end plate in accordance with this invention.

As viewed in FIG. 1, a typical support structure or pallet rack 1 consists of a pair of ladder shaped upright frames 2 and 3 spaced apart from each other and joined together by means of horizontal beams 4, 5, 6 and 7. These beams are joined at their ends to the upright frames 2 and 3 in a manner hereinafter described. The upright frame 2 is also joined to the ends of other horizontal beams 8, 9, 10 and 11, which, although not shown, extend to an additional spaced upright frame similar to frames 2 and 3. In this manner the entire pallet rack 1 can be made any length required. Just as the beams 8, 9, 10 and 11 extend from the frame 2, other beams can extend in the opposite direction from the frame 3 so that the pallet rack can be extended in length in either direction.

Each of the upright frames 2 and 3 consist of a front upright 12 and a rear upright 13 joined together by horizontal front to back members 14 and 15 and diagonal braces 16 and 17. Naturally the lengths of the members 14, 15, 16 and 17 can be appropriately cut to space the uprights 12 and 13 as far apart as necessary to provide the proper span between the front beams 4 and 5 and the rear beams 6 and 7. Also, the uprights 12 and 13 can be made as tall as necessary in order to accommodate the required vertical spacing of the horizontal beams, as well as to permit positioning of as many vertically spaced beams as desired. Also, additional members similar to 14, 15, 16 and 17 can be added to provide sufficient rigidity and strength.

With the structure as shown in FIG. 1, the beams 5 and 6 provide a span across which pallets or other articles can span so that the beams act as their support at an upper level. Similarly, the beams 4 and 7 provide a spanned support for pallets or other objects at a lower level. A pallet 18 is shown supported by the beams 4 and 7 and also a board 19. If continuous shelving is required so that objects will not fall through the spanned opening between the beams, a plurality of boards 19 can be positioned side by side along the beams to provide a continuous uninterrupted support for various shapes and sizes of objects.

The front to back members 14 and 15 and diagonal braces 16 and 17 are preferably welded at their ends to the upright 12 and 13 in order to provide the completed ladder-shaped upright frames 2 and 3. This enables the frames 2 and 3 to be shipped as integral units, thus saving erection time and also insuring a rigid structure which

might not be obtained if nuts and bolts or other fastening means are used to secure these members together.

Each of the uprights **12** and **13** are provided with two rows of first mounting openings **20** extending along the entire length of the front walls **21** of the uprights. The openings **20** are equally spaced from each other by a fixed increment. Each of the uprights **12** and **13** may also be provided with a row of equally spaced openings **22** along opposite side walls **23** and **24** of the uprights though these openings **22** are not utilized in the invention as disclosed herein. These side walls **23** and **24** are positioned parallel to each other and are connected therebetween by the front wall **21** which forms the upright into a channel shape. The side walls **23** and **24** are provided with flanges **25** and **26** which extend toward each other in a plane parallel to the front wall **21** of the upright. The flanges **25** and **26**, the side walls **23** and **24** and the front wall **21** together provide a flanged channel-shaped upright with four corners **27**, **28**, **29** and **30** which impart column strength and rigidity to the uprights.

Even though different number designations have been given to the horizontal beams, they are all identical in structure and can be used interchangeably as front or back beams by merely rotating them 180° end to end in a horizontal plane.

Each horizontal beam **6** is welded at each of its ends to one wall **34** of a corresponding L-shaped end plate **35**. The other wall **36** of each end plate **35** is provided with two inwardly extending attachment posts **37** for concurrent reception and confinement in a pair of the mounting openings **20**. Each post **37** has a shank **37S** and an enlarged head **37H** (see FIGS. 4 and 5).

In order to assemble a horizontal beam **6** to an upright **12** or **13**, the beam is extended horizontally and its L-shaped end plate **35** is brought to bear against the front wall **21** and a side wall **23** or **24** of the upright. In order to do this, the posts **37** on the end plate **35** are aligned to pass through the mounting openings **20** in the upright. These openings **20** are preferably generally keyhole-shaped, having an enlarged circular upper release region **20A** intersecting a narrow elongated lower retainer region **20B** which preferably is slightly canted toward the center of the upright. Having two rows of these holes **20**, the effect is that these elongated retainer regions **20B** are canted or sloped toward each other. Also, a hole **20** in one row is positioned immediately opposite a hole **20** in the adjacent row. Since there is equal spacing between all of the mounting openings **20**, each is positioned with another immediately adjacent to it laterally. The enlarged circular release region **20A** is of a diameter larger than the diameter of the circular head **37H** of the post **37** so that the post **37** can freely fit through it. The shank **37S** of the post is slightly smaller than the width of the elongated retainer region **20B** so that the post can be dropped down into the retainer region **20B** after its head has been passed through the circular release region **20A**. Because of the particular dimensions of the end plate **35** and the positions of the posts **37** carried thereon, as the posts of the end plate slide down the incline of the elongated release regions **20B** of the mounting openings **20**, the wall **34** of the end plate is brought to bear tightly against a side wall of the upright. These posts **37** therefore provide bearing support for the horizontal beam **6** along the plane of the front wall **21** of the upright **13**. By drawing the wall **34** of the end plate **35** snugly against the side wall **23**, this provides a fairly rigid connection between the horizontal beam **6** and the upright **13**.

In accordance with this invention, each end plate **35** is provided with a removable one-piece spring clip lock designated generally at **41**. For this purpose, each mounting plate has its front vertical wall **36** provided with a pair of holes **42** and **43** smaller than and fully registrable with a pair of the mounting openings **20** on the upright when the mounting plate **35** is supported from the upright by the action of the posts **37**. In the preferred form, the upper of these mounting plate holes **42** is of inverted keyhole shape while the lower one **43** is round. The lock **41** is comprised of an elongated sheet metal clip body **44** having a pair of studs **45** and **46** carried in rigid relation thereon to project from a common face thereof at points spaced apart lengthwise of the clip body. The shorter stud **45** terminates in an enlarged head **45H** enterable through the wide region of the keyhole **42** in the mounting plate and then shiftable into the narrow region of this keyhole **42** to engage such enlarged head **45H** behind plate edge portions that border and define the narrow region of this hole. The longer stud **46** is arranged to be enterable through the hole **43**.

Thus, after the end plate **35** is engaged upon the upright in fully assembled relationship to support the beam by the action of the attachment posts **37**, the lock **41** is applied to the end plate wall **36** by first engaging only its shorter stud **45** in the keyhole **42** in the fashion just described. For this purpose the remote end of the clip body **44** is swung to a position as illustrated in phantom lines in FIG. 3 wherein it does not overlie the end plate wall **36** such that its longer stud **46** does not interfere with the insertion of its short stud **45** into the keyhole. The clip body **44**, preferably being of spring steel to enable a resilient bending action, may thereafter be manually deformed to a bowed configuration such as is illustrated in phantom lines in FIG. 4 to permit establishment of clearance between the long stud **46** and the end plate face for enabling rotation of the clip body **44** about an axis defined by the engagement of the short stud **45** within the keyhole **42**. The clip is then rotated until the long stud **46** registers with the lower hole **43**. At this point the clip body **44** may be released to permit the long stud **46** to enter the hole **43** and project into the corresponding upright mounting opening **20** with which the hole **46** is in registry.

It will be apparent from a consideration of FIGS. 2, 3 and 4 that the spring clip lock **41** automatically remains in its installed position and cannot be removed therefrom except by reversely bending or bowing the clip body to withdraw the long stud **46** from its mounting hole **43**. The clearance existing between the long stud **46** and its end plate hole **43** is limited to an amount that insures against escape of the short stud **45** from the retaining region of the mounting plate keyhole.

In the preferred form of spring clip lock, the short stud **45** is spaced substantially from the corresponding end of the clip body to define a clip body tail portion **44T** having a smoothly curving contour for establishing broad surfaced bearing contact with the exterior face of the mounting plate wall **36** to enable easy rotation of the clip body about the axis of the stud **45**. The portion **44T** is connected to the clip body **44** by means of a curved portion **44S** of opposite curvature to that of the portion **44T**. Whereas the portion **44T** provides the surface bearing contact, as mentioned, with the exterior face of the mounting plate wall **36**, the curved portion **44S** provides a region of the spring clip lock **41** spaced away from the wall **36** which facilitates manipulation of the spring clip lock **41**.

An important feature of the spring clip lock is that in its mounted position upon the end plate wall **36**, the lock **41** prevents disassembly of the beam **6** from the upright **13**. Accidental disassembly of a beam from an upright can occur when a worker is manipulating a fork lift truck for arranging pallet loads on the pallet rack structure. It is conceivable that the forks of the lift truck might accidentally be positioned beneath one of the beams, whereupon sudden operation of the forks of the truck in an upward direction could disassemble a beam if it were retained only by the action of the posts **37**. This possibility is prevented by the lock **41** of this invention. It will be noted that the longer stud **46** carried on the clip body **44** projects into the mounting opening **20** of the upright in sufficient proximity to upper edge regions

thereof to engage the upright and thereby limit vertical movement of the end plate and beam prior to the time that the attachment posts 37 can shift free of retained engagement in the mounting openings of the upright. Where the lock functions in this manner to prevent such accidental disassembly of the pallet rack structure, the force to which the lock is subject consists only of shear loading on the longer stud 46 and the clip body 44 is itself free of any substantial loading.

There is particular advantage in the fact that the spring clip lock 41 is located in an exposed mounted position upon the end plate. It thus becomes extremely simple to check visually and determine that the lock is in place and is properly positioned in flush relation which it can assume only when its studs are fully entered through the mounting plate. The registry of the holes 42 and 43 in the mounting plate with respect to the mounting openings 20 in the upright also insures that when the lock is flush against the end plate wall 36, its stud 46 projects into the upright in position for immediate engagement in the event of upward forces being applied to the beam.

Another important feature resides in the fact that the lock is mounted to the end plate and, as such, is completely independent of the beam construction. This enables maximum standardization in the main components of the pallet rack structure.

While the lock 41 is separate of the upright and beam, it is not subject to becoming lost or mislaid as in the case of most loose parts, as it has a natural storage location on the end plate so that it will be present and ready when the pallet rack structure is to be assembled. In addition, the fact that it is a one-piece removable element makes replacement easy in the event of damage to the lock, and this can be an important asset as compared with permanently mounted locks which cannot be replaced except by major reconstruction or repair of the beam.

Although only a single embodiment of the invention has been shown and described, it should be clearly understood that the invention can be made in many different ways without departing from the true scope of the invention as defined by the appended claims.

I claim:

1. A combination of an upright having one vertical wall provided with a plurality of vertically spaced keyhole mounting openings, a mounting plate having one vertical wall provided with spaced attachment posts for concurrent reception and confinement in a pair of said mounting openings, each post having a shank and an enlarged head and being engaged by passing its head into a mounting opening and then shifting its head transversely behind wall portions bordering said opening, said mounting plate having a pair of holes smaller than and fully registrable with a pair of said mounting openings when said mounting plate is supported from said upright by the action of said posts, and a removable one-piece spring clip lock for securing said mounting plate against dislodgment from said upright by limiting upward movement of said posts relative to said upright, said lock comprising a unitary element having first means received and confined in swingable relation in one of said holes and having second means for entry through the other hole upon swinging movement of said element about said first means, with said second means projecting into said registering mounting opening in sufficient proximity to upper edge regions thereof to engage said upright and limit vertical movement of said mounting plate before said posts shift free of said upright.

2. A combination of an upright having one vertical wall provided with a plurality of vertically spaced keyhole mounting openings, a mounting plate having one vertical wall provided with spaced attachment posts for concurrent reception and confinement in a pair of said mounting openings, each post having a shank and an enlarged head and being engaged by passing its head into a mounting opening and then shifting its head transversely behind wall edge portions bordering said opening, said mounting plate having a pair of holes smaller than and fully registrable with a pair of said mounting openings when said mounting plate is supported from said upright by the action of said posts, and a removable spring clip lock for securing said mounting plate against dislodgment from said upright by limiting upward movement of said posts relative to said upright, said lock comprising an elongated sheet metal clip body and a pair of studs carried in rigid relation on said body to project from a common face thereof at points spaced apart lengthwise of said body, one of said studs terminating in an enlarged head entered into one of said holes and then shifted transversely behind plate edge portions bordering said one hole, and said clip body being resiliently bendable to permit establishment of clearance between said other stud and said plate for enabling rotation of said body about said one stud until said other stud registers with and enters said other hole to project into said registering mounting opening in sufficient proximity to upper edge regions thereof to engage said upright and limit vertical movement of said plate before said posts shift free of said upright.

3. A combination of an upright having one vertical wall provided with a plurality of vertically spaced mounting openings each having an enlarged upper release region and a reduced lower retainer region, a mounting plate having one vertical wall provided with spaced attachment posts for concurrent reception and confinement in a pair of said mounting openings, each post having a shank and an enlarged head and being engaged by passing its head through the release region and thereafter fitting its shank within the retainer region of its corresponding opening, said mounting plate having a pair of holes smaller than and fully registrable with a pair of said mounting openings when said mounting plate is supported from said upright by the action of said posts, and a removable one-piece spring clip lock for securing said mounting plate against dislodgment from said upright by limiting upward movement of said posts relative to said upright, said lock comprising a unitary element having first means received and confined in swingable relation in one of said holes and having second means for entry through the other hole upon swinging movement of said element about said first means, with said second means thereafter reacting against said plate to fix said lock relative to said plate and said second means projecting into said registering mounting opening in sufficient proximity to upper edge regions thereof to engage said upright and limit vertical movement of said plate before said posts shift free of said upright.

4. A removable spring clip lock for use in a supporting structure comprising an elongated sheet metal clip body and a pair of studs carried in rigid relation on said body to project from a common face thereof at points spaced apart lengthwise of said body, one of said studs terminating in an enlarged head adapated for movement axially and then laterally to establish freely rotatable retained engagement within a keyhole slot provided in a cooperating mounting plate for said lock, and said clip body being resiliently bendable to permit establishment of axial clearance between said other stud and the mounting plate for enabling rotation of said clip body about said one stud until said other stud registers with and enters a corresponding opening provided in said cooperating mounting plate.

5. A removable spring clip lock for use in a supporting structure comprising an elongated sheet metal clip body and a pair of studs carried in rigid relation on said body to project from a common face thereof at points spaced apart lengthwise of said body, one of said studs terminating in an enlarged head adapted for movement axially and then laterally to establish freely rotatable retained engagement with a keyhole slot provided in a cooperating mounting plate for said lock, and said clip

body being resiliently bendable to permit establishment of axial clearance between said other stud and the mounting plate for enabling rotation of said clip body about said one stud until said other stud registers with and enters a corresponding hole provided in said cooperating mounting plate, said one stud being spaced substantially from a corresponding end of said body to define a tail portion that establishes broad surfaced bearing contact with said plate during rotation of said body.

6. A combination of an upright having one vertical face provided with a plurality of vertically spaced keyhole mounting openings, a mounting plate having one vertical face provided with attachment posts having heads and spaced vertically for concurrent engagement in a pair of said mounting openings, said mounting plate having a pair of holes smaller than and fully registrable with a pair of said first named mounting openings when said mounting plate is supported from said upright by the action of said posts, and a removable one-piece spring clip lock for securing said mounting plate against dislodgment from said upright, said lock comprising an elongated sheet metal clip body and a pair of studs carried in rigid relation on said body to project from a common face thereof at points spaced apart lengthwise of said body, one of said studs terminating in an enlarged head adapted for movement axially and then laterally to establish freely rotatable retained engagement with one of said holes in said mounting plate, and said clip body being resiliently bendable to permit establishment of axial clearance between said other stud and the mounting plate for enabling rotation of said clip body about said one stud until said other stud registers with and enters the other hole provided in said cooperating mountplate, said one stud being spaced substantially from a corresponding end of said body to define a tail portion that establishes broad surfaced bearing contact with said plate during rotation of said body.

7. In a pallet rack comprised of spaced uprights, horizontal beams bridged between adjacent uprights and equipped with end plates removably engaged in supported relation on said uprights by means of headed posts carried on said endplates and each retained in generally upright keyhole slots in the corresponding upright, the improvement comprising a separate removable one-piece spring clip lock for securing each mounting plate against dislodgment from its corresponding upright by limiting upward movement of said posts relative to said upright, wherein each plate has a pair of holes smaller than and fully registrable with a pair of said keyhole slots when such plate is supported from an upright by the action of said posts, said lock comprising a unitary element having first means received and confined in swingable relation in one of said holes and having second means for entry through the other hole upon swinging movement of said element about said first means, with said second means thereafter reacting against said plate to fix said lock relative to said plate and said second means projecting into said registering keyhole slot in sufficient proximity to upper edge regions thereof to engage said upright and limit vertical movement of said plate before said posts shift free of said upright.

8. In a pallet rack comprised of spaced uprights, horizontal beams bridged between adjacent uprights and equipped with end plates removably engaged in supported relation on said uprights by means of headed posts carried on said endplates and each retained in generally upright keyhole slots in the corresponding upright, the improvement comprising a separate removable one-piece spring clip lock for securing each mounting plate against dislodgment from its corresponding upright by limiting upward movement of said posts relative to said upright, wherein each plate has a pair of holes smaller than and fully registrable with a pair of said keyhole slots when such plate is supported from an upright by the action of said posts, said lock comprising an elongated sheet metal clip body and a pair of studs carried in rigid relation on said body to project from a common face thereof at points spaced apart lengthwise of said body, one of said studs terminating in an enlarged head entered into one of said holes and then shifted transversely behind plate edge portions bordering said one hole, and said clip body being resiliently bendable to permit establishment of clearance between said other stud and said plate for enabling rotation of said body about said one stud until said other stud registers with and enters said other hole to project into said registering keyhole slot in sufficient proximity to upper edge regions thereof to engage said upright and limit vertical movement of said plate before said posts shift free of said upright.

References Cited by the Examiner

UNITED STATES PATENTS

2,422,693	6/1947	McArthur	24—223
2,639,042	5/1953	Lambert	211—176
3,042,221	7/1962	Rasmussen	211—148
3,055,462	8/1962	Steele	189—36
3,152,670	10/1964	Selkregg	287—189.36

CLAUDE A. LE ROY, *Primary Examiner.*

W. D. LOULAN, *Assistant Examiner.*