(19) Europäisches Patentamt
European Patent Office
Office européen des brevets

(11) EP 0 511 602 B1

(12) EUROPEAN PATENT SPECIFICATION

(45) Date of publication and mention of the grant of the patent:
11.09.1996 Bulletin 1996/37

(51) Int. Cl.[6]: **B41J 2/05**, B41J 2/38

(21) Application number: **92107065.2**

(22) Date of filing: **24.04.1992**

(54) Method and apparatus for controlling the temperature of thermal ink jet and thermal printheads through the use of nonprinting pulses

Verfahren und Apparat zur Steuerung der Temperatur von Wärmetintenstrahl- und Wärmedruckköpfen mittels Anwendung von nicht druckerzeugenden Impulsen

Procédé et appareil pour contrôler la température de têtes de jets d'encre thermiques et de tête d'imprimantes thermiques au moyen d'impulsions non génératrices d'impression

(84) Designated Contracting States:
DE FR GB IT

(30) Priority: **01.05.1991 US 694185**

(43) Date of publication of application:
04.11.1992 Bulletin 1992/45

(73) Proprietor: **Hewlett-Packard Company**
Palo Alto, California 94304 (US)

(72) Inventor: **Yeung, King-Wah W.**
Cupertino, CA 95014 (US)

(74) Representative: **Liesegang, Roland, Dr.-Ing. et al**
FORRESTER & BOEHMERT
Franz-Joseph-Strasse 38
80801 München (DE)

(56) References cited:
EP-A- 0 020 984
DE-A- 3 546 138
US-A- 4 567 353

Note: Within nine months from the publication of the mention of the grant of the European patent, any person may give notice to the European Patent Office of opposition to the European patent granted. Notice of opposition shall be filed in a written reasoned statement. It shall not be deemed to have been filed until the opposition fee has been paid. (Art. 99(1) European Patent Convention).

EP 0 511 602 B1

Printed by Rank Xerox (UK) Business Services
2.13.4/3.4

Description

Field of the Invention

This invention relates generally to thermal ink jet and thermal printing systems, and is more particularly directed to controlling the temperature of thermal ink jet and thermal printheads.

Background of the Invention

Thermal ink jet printers are well known in the art and are illustrated in U.S. Patents 4,490,728 and 4,313,684. The thermal ink jet printhead has an array of precisely formed nozzles, each having a chamber which receives ink from an ink reservoir. Each chamber has a thin-film resistor, known as a firing resistor, located opposite the nozzle so ink can collect between the nozzle and the firing resistor. When printing pulses heat the firing resistor, a small portion of the ink directly adjacent to the firing resistor vaporizes. The rapidly expanding ink vapor displaces ink from a nozzle causing drop ejection. The ejected drops collect on a print medium to form printed characters and images.

Printhead temperature fluctuations have prevented the realization of the full potential of thermal ink jet printers because these fluctuations produce variations in the size of the ejected drops which result in degraded print quality. The size of ejected drops varies with printhead temperature because two properties that control the size of the drops vary with printhead temperature: the viscosity of the ink and the amount of ink vaporized by a firing resistor when driven with a printing pulse. Printhead temperature fluctuations commonly occur during printer startup, during changes in ambient temperature, and when the printer output varies. For example, temperature fluctuations occur when the printer output changes from normal print to "black-out" print (i.e., where the printer covers the page with dots).

When printing text in black and white, the darkness of the print varies with printhead temperature because the darkness depends on the size of the ejected drops. When printing gray-scale images, the contrast of the image varies with printhead temperature because the contrast depends on the size of the ejected drops.

When printing color images, the printed color varies with printhead temperature because the printed color depends on the size of all the primary color drops that create the printed color. If the printhead temperature varies from one primary color nozzle to another, the size of drops ejected from one primary color nozzle will differ from the size of drops ejected from another primary color nozzle. The resulting printed color will differ from the intended color. When all the nozzles of the printhead have the same temperature but the printhead temperature increases or decreases as the page is printed, the colors at the top of the page will differ from the colors at the bottom of the page. To print text, graphics, or images of the highest quality, the printhead temperature must remain constant.

Thermal printers are well known in the art. The printheads have an array of heating elements that either heat thermal paper to produce a dot on the thermal paper or heat a ribbon (which can have bands of primary color inks as well as black ink) to transfer a dot to the page. In either case, fluctuations in the printhead temperature produce fluctuations in the size of the printed dot which affect the darkness of the print when printing in black and white, the gray-tone when printing in gray scale, and the resulting printed color when printing in color.

From the DE-A-35 46 138 an apparatus and a method for controlling the temperature and viscosity of the ink used in an inkjet printer is known. According to this reference heating pulses are provided prior to printing operation in order to achieve a desired viscosity range for the ink after an interruption of the printer.

Summary of the Invention

For the reasons previously discussed, it would be advantageous to have a method and apparatus for controlling the temperature of thermal ink jet printheads and thermal printheads. The foregoing and other advantages are provided by the present invention which is a method and apparatus for controlling in real time (i.e., during the print cycle of the printer) the temperature of a thermal ink jet printhead or a thermal printhead through the use of nonprinting pulses (i.e., pulses that do not have sufficient energy to cause the printhead to fire). The invention includes an open-loop energy compensation system, a closed-loop temperature regulation system, and a combination of both.

The open-loop energy compensation system has three main components: a thermal ink jet printhead, an open-loop pulse generator, and a data interpreter. The thermal ink jet printhead has firing resistors which cause drops to eject when driven with printing pulses in response to print commands. The printhead also has a known energy transfer characteristic such that X is the percentage of the energy of a printing pulse transferred to an ejected drop and (100 - X) is the percentage of the energy of the printing pulse absorbed by the printhead. The open-loop pulse generator generates either a printing pulse having an energy E_p for delivery to the firing resistor to eject an ink drop that carries the energy $E_p(X/100)$ and to heat the printhead with the remaining energy $E_p[(100 - X)/100]$, or one or more open-loop nonprinting pulses having a total energy of $E_p[(100 - X)/100]$ that only heat the printhead. The data interpreter interprets the print data and instructs the pulse generator to transmit the printing pulse when the print data contains a print command and to transmit one or more open-loop nonprinting pulses in place of a printing pulse when the data does not contain a print command so that the printhead dissipates the same amount of power regardless of the print data content.

The closed-loop temperature regulation circuit has a temperature sensor, an error detection amplifier, and a means for generating closed-loop nonprinting pulses. The temperature sensor senses the printhead temperature and produces a real-time printhead temperature signal. The error detection amplifier has an input connected to a reference temperature signal, has an input connected to the printhead temperature signal, and generates a real-time error output signal that is a function of the difference between the reference temperature signal and the printhead temperature signal. The means for generating closed-loop nonprinting pulses uses the error output signal to control the timing of closed-loop nonprinting pulses and the energy transmitted to the printhead by the closed-loop nonprinting pulses to achieve real-time, closed-loop control of the printhead temperature.

Brief Description of the Drawings

Figure 1A shows a block diagram of the closed-loop temperature regulation system for maintaining constant printhead temperature.

Figure 1B shows a timing diagram of pulses the closed-loop temperature regulation system, shown in Figure 1A, applies across the firing resistor.

Figure 2A shows a block diagram of the open-loop energy compensation system for maintaining constant printhead temperature.

Figure 2B shows a timing diagram of pulses the open-loop energy compensation system, shown in Figure 2A, applies across the firing resistor.

Figure 3A shows a block diagram of a hybrid system that combines the closed-loop temperature regulation system of Figure 1A and the open-loop energy compensation system of Figure 2A.

Figure 3B shows a timing diagram of pulses the hybrid system, shown in Figure 3A, applies across the firing resistor.

Detailed Description of the Invention

Persons skilled in the art will readily appreciate the advantages and features of the disclosed invention after reading the following detailed description in conjunction with the drawings.

Figure 1A shows a block diagram of a closed-loop temperature regulation system 20. This closed-loop system has the advantage of rapidly and precisely regulating the temperature of the printhead and maintaining it at a constant temperature regardless of changes in the operating conditions of the printer such as, the startup condition, large or small changes in the ambient temperature, and changes in the printer output. The closed-loop system has the additional advantage of simple and inexpensive installation in commercial thermal ink jet printers and thermal printers since it uses the existing power supply, driver chip, interconnects, and firing resistors.

In the preferred embodiment of the closed-loop system, a firing resistor 30 receives printing pulses from a printing pulse generator 28. Temperature sensor 32 senses the temperature of printhead 26 and produces a real-time printhead temperature signal 25 that buffer-amplifier/data-converter 34 amplifies and converts into a form that the error detection amplifier 22 will accept. Error detection amplifier 22 compares this signal to a reference temperature signal 36 and generates a real-time error output signal and relays it to a closed-loop pulse generator 24 which transmits closed-loop nonprinting pulses to firing resistor 30 during the print cycle.

In the preferred embodiment, firing resistors 30 reside on the same substrate as temperature sensor 32. Temperature sensor 32 is a high resistance aluminum trace similar to aluminum traces that make up the interconnects between the firing resistors and the pulse generators with the difference being that the temperature sensor trace is a high resistance trace that experiences large changes in resistance when the temperature changes. The temperature coefficient of the aluminum converts the resistance change into a temperature change and allows one to calculate the temperature if one calibration point is known.

An alternate embodiment of the invention has one or more heating resistors located on the same substrate as the firing resistors and the temperature sensor. All pulse generators transmit their nonprinting pulses to these heating resistors instead of the firing resistors as the preferred embodiment does. This embodiment has the disadvantage of increasing the number of interconnects and increasing the amount of drive circuitry. In a software implementation of this embodiment, the software can combine the nonprinting pulses from the generators into one or more pulses and transmit them to one or more heating resistors.

Figure 1B shows a timing diagram of the pulses transmitted to firing resistor 30. Printing pulses 44 can occur as frequently as every printing interval 46. For example, in a specific thermal ink jet printer, the printing interval has a duration of 278 µseconds and the printing pulses have a duration of approximately 3.25 µseconds.

When the temperature indicated by reference temperature signal 36 exceeds the temperature of printhead 26, error detection amplifier 22 instructs closed-loop pulse generator 24 to increase the energy of closed-loop nonprinting pulses 42, shown in Figure 1B. These pulses travel to firing resistor 30, via a summing node 38, and heat printhead 26. Summing node 38 combines the outputs of printing pulse generator 28 and nonprinting pulse generator 24.

The present invention has the advantage of using low-energy nonprinting pulses that heat the printhead without vaporizing the ink adjacent to the firing resistor. A vaporized ink bubble acts as a heat insulator and forces the firing resistor to absorb any additional energy whether it originates with a printing pulse or a nonprinting pulse. The extra heat can cause the firing resistor to reach high temperatures and fail prematurely. Thus, the

nonprinting pulses of the present invention have the advantage of heating the printhead without damaging the firing resistor.

When the printhead temperature exceeds the temperature indicated by reference temperature signal 36, closed-loop system 20 reduces the amount of energy transmitted by the closed-loop nonprinting pulses. To prevent the printhead temperature from exceeding the reference temperature after the closed-loop system 20 has reduced the energy of the closed-loop nonprinting pulses to zero, the preferred embodiment sets the reference temperature somewhere between 10°C to 100°C above room temperature.

The preferred embodiment of the invention employs an off-the-shelf thermal ink jet printhead and uses the aluminum trace located near the firing resistor as a temperature sensor. However, future embodiments of the invention may use a printhead specifically designed for high temperature operation. Such a printhead would have ink, adhesives, firing resistors, and an ink chamber specifically designed for high temperature operation.

Experts in the art of thermal ink jet printer design operate printheads at the lowest possible temperature because they believe it minimizes thermal stress on the printhead. These experts view the present invention with skepticism because it operates printheads at elevated temperatures. However, operating the printhead at a constant elevated temperature, per the present invention, may subject the printhead to less thermal stress than what it experiences when the temperature varies.

In the preferred embodiment, the width of closed-loop nonprinting pulses 42 varies between 0 µsecond and 1.125 µseconds according to the amount of energy they transmit. Alternate embodiments may hold the pulse width constant and vary the voltage, the number of closed-loop nonprinting pulses in one printing interval 46, or some combination of pulse width, voltage, and number of closed-loop nonprinting pulses in one interval. The important parameter is the energy carried by the pulse. The energy should be large enough to adjust the printhead temperature without causing the printer to misfire.

Closed-loop nonprinting pulses 42 can occur at any time during printing interval 46 as long as they do not interfere with the printing pulses. If a nonprinting pulse occurs before the printing pulse and interferes with it, the nonprinting pulse will alter the size of the resulting ejected drop in the manner disclosed by U.S. Patent 4 982 199, invented by Dunn and assigned to the Hewlett-Packard Company. If the nonprinting pulse occurs too soon after the printing pulse when the bubble still exists, then the nonprinting pulse will raise the temperature of the firing resistor and will contribute to the premature failure of the firing resistor. Also, more than one closed-loop nonprinting pulse 42 may occur within one printing interval as shown in Figure 1B.

Alternate embodiments of closed-loop system 20 may have multiple feedback loops having different response times. Figure 3A shows a hybrid system 90 that has multiple closed loops. One loop 94 has a slow response time, such as 1 to 10 seconds, and adjusts the energy carried by closed-loop nonprinting pulses 148 to compensate for drifts in ambient temperature. Another loop 92 has a fast response time, in the millisecond range, and adjusts the energy carried by closed-loop nonprinting pulses 142 to drive the printhead temperature to the reference temperature as quickly as possible. Alternate embodiments may have a third closed loop that replaces open-loop system 96. This loop compensates for changes in the power dissipation of a printhead caused by changes in the printer output by adjusting the energy carried by the closed-loop nonprinting pulses.

When the ambient temperature has stabilized and the thermal transients that occur during startup have passed, the temperature of prior-art printheads varies with the number of printing pulses because the ejected drops absorb only a portion of the printing pulse energy and leave the printhead to absorb the remainder. Thus, the printhead temperature rises with increases in printer output and falls with decreases in printer output.

When one knows the energy transfer characteristics of a printhead such as the percentage of the printing pulse energy transferred to an ejected drop (X) and the percentage of the printing pulse energy absorbed by the printhead (100 - X), then one can use open-loop system 60 shown in Figure 2A to maintain a constant heat flow to the printhead regardless of the content of print data 62. Figure 2B shows a timing diagram 80 of the pulses that open-loop system 60 applies across firing resistor 68. During each interval, open-loop pulse generator 66 applies either a printing pulse 82 or one or more open-loop nonprinting pulses 84 across firing resistor 68. Data interpreter 64 reads print data 62. If it contains a print command in a printing interval 86, then data interpreter 64 instructs open-loop pulse generator 66 to generate printing pulse 82. Otherwise, data interpreter 64 instructs open-loop pulse generator 66 to generate one or more open-loop nonprinting pulses 84.

This open-loop system 60 compensates for changes in the energy flow to the printhead caused by variations in the printer output. It can not compensate for fluctuations in the printhead temperature caused by other factors such as changes in the ambient temperature and thermal transients that occur during startup. The closed-loop system compensates for these fluctuations.

An apparatus similar to that shown in Figure 2A can measure the energy transfer characteristics of a printhead, such as the amount of energy transferred to an ejected drop and the amount of energy absorbed by the printhead when ejecting a drop. This measurement has the following steps. First, for each firing resistor participating in this measurement (any number of firing resistors greater than one may be used), a printer controller sends print data 62 containing one print command per printing interval 86 to data interpreter 64. Data inter-

preter 64 responds by signaling open-loop pulse generator 66 to send one printing pulse having an energy E_p to the firing resistor each printing interval. When the printhead reaches "thermal equilibrium" (i.e., the printhead temperature stabilizes), a temperature sensor, located on the same substrate as the firing resistor, measures the printhead's thermal equilibrium temperature. Second, the printer controller sends print data 62 that does not have a print command in any printing interval to data interpreter 64. The data interpreter 64 instructs open-loop pulse generator 66 to transmit nonprinting pulses to the firing resistor. The energy carried by the nonprinting pulses in one printing interval is adjusted until the printhead temperature stabilizes at the same thermal equilibrium temperature measured in the first step. Third, the amount of energy transmitted in one printing interval by the nonprinting pulses that caused the printhead to stabilize at the thermal equilibrium temperature is measured. Fourth, this energy is subtracted from the energy of one printing pulse to obtain the amount of energy carried by one ejected drop. The energy transmitted by the nonprinting pulses equals the energy absorbed by the printhead when ejecting a drop.

The preferred embodiment of the invention is a hybrid system 90, shown in Figure 3A, that has a startup closed loop 92, a steady-state closed loop 94, and an open-loop system 96. This system compensates for all fluctuations in the printhead temperature: those caused by variations in the printer output as well as fluctuations caused by the startup condition and changes in the ambient temperature. Open-loop system 96 is the same open-loop system shown in Figure 2A and closed-loop systems 92, 94 are similar to those shown in Figure 1A. Alternate embodiments of the invention may require more closed-loop systems.

Multiple closed loops have the advantage of achieving complex nonlinear responses to temperature fluctuations. Startup closed loop 92 has a fast response time for heating the printhead during its startup phase, it responds quickly to a difference between the printhead temperature signal 100 and the startup reference temperature signal 102. Steady-state closed loop 94 has a slow response time for tracking changes of the printhead temperature due to changes in the ambient temperature and other slowly changing factors. Since this loop responds slowly to changes, steady-state closed loop 94 will tend to produce steady-state closed-loop pulses 148 on a regular basis as shown in Figure 3B.

This hybrid system has the advantage of easy implementation because it can use the spare time of the processor in the printer controller. The startup closed loop functions when the processor does not have much to do so the loop can use a large percentage of the processor's time and thereby achieve a fast response time. The steady-state closed loop does not require much processor time and can function using the spare time of the processor while it controls printing operations.

To prevent the nonprinting pulses from overheating the printhead with too much energy too soon and causing the printhead to misfire, the closed-loop and open-loop systems can generate several nonprinting pulses in one printing interval which divide up the energy that would otherwise be carried by one nonprinting pulse. Figure 3B shows two of the startup closed-loop nonprinting pulses 142 generated by startup closed loop 92 of Figure 3A and shows that open-loop system 96 generates two open-loop nonprinting pulses 144 in one printing interval. The startup closed loop system can further protect against misfiring by moving the printhead out of range of the print medium when issuing the nonprinting pulses.

The startup closed loop 92 and steady-state closed loop 94 operate like closed-loop system 20 shown in Figure 1A. Temperature sensor 124 produces a printhead temperature signal 100 which travels to a buffer-amplifier/data-converter 108 that amplifies this signal and converts into a form acceptable to error detection amplifiers 104, 112. Error detection amplifiers 104, 112 compare this signal to startup reference temperature signal 102 and steady-state reference temperature signal 110, respectively. The output of these error detection amplifiers travels to startup closed-loop pulse generator 106 to generate start-up closed-loop nonprinting pulses 142 and to steady-state closed-loop pulse generator 114 to generate steady-state closed-loop nonprinting pulses 148, respectively. In the preferred embodiment, the closed-loop systems control the energy of closed-loop nonprinting pulses 142, 148 by controlling their widths.

In alternate embodiments of the invention, startup reference temperature signal 102 may be less than the steady-state reference temperature signal 110. When the printhead temperature exceeds the temperature indicated by startup reference temperature signal 102, startup closed loop 92 shuts down and steady-state closed loop 94 carries out all temperature regulation. In alternate embodiments of the invention, startup reference temperature signal 102 may be a little more or a lot more than the steady-state reference temperature signal 110 so that startup closed loop 92 will heat the printhead faster. When the printhead reaches a pre-set temperature, the software or electronics will shut-down startup closed loop 92 and steady-state closed loop 94 will take over temperature regulation.

Figure 3A shows the preferred embodiment of the invention as having two physically separate closed loops. A software implementation of this invention could merge the two loops into one loop with two different response times. If a more complex nonlinear response is required, additional loops may be added, perhaps some with a variable response time. A software implementation could also merge the output of the closed-loop systems to the open-loop system as long as it does not merge a printing pulse with a nonprinting pulse and as long as the energy of the resulting nonprinting pulse can not cause the printhead to misfire.

The energy compensation section 96 of hybrid system 90 consists of print data 118, a data interpreter 120, and an open-loop pulse generator 126. Data interpreter 120 decides whether open-loop pulse generator 126 should generate a printing pulse or one or more open-loop nonprinting pulses and open-loop pulse generator 126 applies these pulses across firing resistor 122. Summing node 116 merges the output of the various pulse generators onto a single trace bound for firing resistor 122.

The claims define the invention. Therefore, the foregoing Figures and Detailed Description show a few example systems possible according to the claimed invention. However, it is the following claims that both (a) define the invention and (b) determine the invention's scope.

Claims

1. An apparatus for real-time, closed-loop control of the temperature of a thermal ink jet or a thermal printhead (26; 128), comprising:

   a. a temperature sensor (32) that:

      i. senses the printhead (26) temperature; and
      ii. produces a real-time printhead temperature signal (25; 100);

   b. an error detection amplifier (22), that:

      i. has an input connected to a reference temperature signal (36);
      ii. has an input connected to the printhead temperature signal (25); and
      iii. generates a real-time error output signal that is a function of the difference between the reference temperature signal (36) and the printhead temperature signal (25); and

   c. a means for generating during selected printing intervals closed-loop nonprinting pulses (24) that uses the error output signal to control the timing of the closed loop nonprinting pulses (42; 142) and the energy delivered by the closed-loop nonprinting pulses (42) to the printhead (26) to achieve real-time, closed-loop control of the printhead (26) temperature.

2. An apparatus as in claim 1, further comprising:

   a. a second error detection amplifier (104), that:

      i. has an input connected to a second reference temperature signal (102);
      ii. has an input connected to the printhead temperature signal (100); and
      iii. generates an error output signal that is a function of the difference between the second reference temperature signal (102) and the printhead temperature signal (100); and

   b. a second means for generating closed-loop nonprinting pulses (106) in real time that uses the error output signal to control the timing of the closed-loop nonprinting pulse (142) and the energy delivered by the closed-loop nonprinting pulse (142) to the printhead (128) to achieve real-time, closed-loop control of the printhead temperature.

3. An apparatus as in claim 1 or 2, wherein the means for generating closed-loop nonprinting pulses (24) further comprises a means to vary the energy transmitted by the closed-loop nonprinting pulses (42) by varying the width of the closed-loop nonprinting pulses (42).

4. An apparatus as in one of the preceding claims wherein the means for generating closed-loop nonprinting pulses (24) further comprises a means to vary the energy transmitted by the closed-loop nonprinting pulses (42) by varying the voltage of the closed-loop nonprinting pulses (42).

5. An apparatus as in one of the preceding claims wherein the means for generating closed-loop nonprinting pulses (24) further comprises a means to vary the energy transmitted by the closed-loop nonprinting pulses (42) by varying the number of closed-loop nonprinting pulses (42) in one printing interval (46).

6. An apparatus as in one of the preceding claims wherein the closed-loop nonprinting pulses (42) are applied to a firing resistor (30).

7. A method for real-time, closed-loop control of the temperature of a thermal ink jet or a thermal printhead (26), comprising the steps of:

   a. sensing the temperature of the printhead (26);
   b. producing a real-time printhead temperature signal (25);
   c. comparing the printhead temperature signal (25) to a reference temperature signal (36);
   d. generating a real-time error output signal that is a function of the difference between the reference temperature signal (36) and the printhead temperature signal (25); and
   e. using the error output signal to control the timing of closed-loop nonprinting pulses (42) and the energy transferred by the closed-loop nonprinting pulses (42) to the printhead (26) to

achieve real-time, closed-loop control of the printhead temperature, wherein the closed-loop nonprinting pulses are generated during selected printing intervals.

8. An apparatus for controlling the temperature of a thermal ink jet printhead, comprising:

a thermal ink jet printhead (70; 128) having ink firing resistors (68; 122); and
pulse generating means (66; 126) for driving each of the ink firing resistors with a printing pulse during each of selected printing intervals with a printing pulse, and driving each of the ink firing resistors with one or more nonprinting pulses during each of selected printing intervals when an ink firing resistor is not driven with a printing pulse.

9. The apparatus of Claim 8 wherein the thermal ink jet printhead has a known energy transfer characteristic such that X is the percentage of the energy of a printing pulse transferred to an ejected ink drop and (100-X) is the percentage of the energy of the printing pulse absorbed by the printhead, wherein a printing pulse has an energy E_p for delivery to an ink firing resistor such that the ink drop carries an energy $E_p(X/100)$ and the printhead is heated with the remaining energy $E_p[(100-X)/100]$, and wherein the one or more nonprinting pulses have a total energy of $E_p[(100- X)/100]$.

10. A method for controlling the temperature of a thermal ink jet printhead (70) having a firing resistor (68), comprising the steps of:

driving the ink firing resistor with a printing pulse during each of selected printing intervals; and
driving the ink firing resistor with at least one nonprinting pulse during each of selected printing intervals when the ink firing resistor is not driven with a printing pulse.

11. The method of Claim 10 wherein the thermal ink jet printhead has a known energy transfer characteristic such that X is the percentage of the energy of a printing pulse transferred to an ejected ink drop and (100-X) is the percentage of the energy of the print pulse absorbed by the printhead, wherein the printing pulse has an energy E_p for delivery to an ink firing resistor such that the ink drop carries an energy $E_p(X/100)$ and the printhead is heated with the remaining energy $E_p[(100-X)/100]$, and wherein the one or more non-printing pulses have a total energy of $E_p[(100-X)/100]$.

12. The apparatus of claim 8 or 9 for real-time control of the temperature of said thermal ink jet printhead (128), comprising:

an open loop system (96) including said pulse generating means (126) for driving each of the ink firing resistors (122); and
a closed loop system (94) including:

(a) a temperature sensor (124) for sensing the temperature of the printhead and producing a real-time printhead temperature signal (100);
(b) an error detection amplifier responsive to a reference temperature signal (110) and the printhead temperature signal for generating a real-time error output signal; and
(c) means for generating during selected printing intervals closed-loop nonprinting pulses (114) that uses the error output signal to control the timing of the closed-loop nonprinting pulses and the energy delivered by the closed-loop nonprinting pulses (148) to the printhead (128) to achieve real-time, closed-loop control of the printhead temperature.

13. An apparatus as in Claim 12, wherein the open-loop nonprinting pulses (144) and the closed-loop nonprinting (148) are transmitted to the firing resistor (122) which provides control over the printhead temperature and eliminates the need for an additional resistor.

14. An apparatus as in Claim 12 or 13, further comprising: a summing node (116), that:

i. has one terminal connected to the output of the closed-loop system (94); and
ii. has a second terminal connected to the output of the open-loop energy system (96); and
iii. combines the closed-loop nonprinting pulse generated by the closed-loop system (94) and the open-loop nonprinting pulse generated by the open-loop system and transmits the resulting pulses to the firing resistor (122).

15. An apparatus as in Claim 12, 13 or 14, further comprising: a second closed loop system (92), having:

a. a second error detection amplifier (104), that:

i. has an input connected to a second reference temperature signal (102);
ii. has an input connected to the printhead temperature signal (100); and

iii. generates an error output signal that is a function of the difference between the second reference temperature signal (102) and the printhead temperature signal (100); and

b. a second means for generating closed-loop nonprinting pulses (106) that uses the error output signal to control the timing of a closed-loop nonprinting pulse (142) and the energy delivered to the printhead (128) by the Closed-loop nonprinting pulse (142) to achieve real-time, closed-loop control of the printhead temperature.

Patentansprüche

1. Vorrichtung zur Echtzeit-Regelung der Temperatur eines Tintenstrahldruckkopfes oder eines thermischen Druckkopfes (26; 128) mit geschlossenem Regelkreis, mit

a) einem Temperatursensor (32), der

i) die Temperatur des Druckkopfes (26) erfaßt und
ii) ein Echtzeit-Druckkopftemperatursignal (25; 100) erzeugt,

b) einem Fehlererfassungs-Verstärker (22), der

i) einen Eingang aufweist, der mit einem Bezugstemperatursignal (36) verbunden ist,
ii) einen Eingang aufweist, der mit dem Druckkopftemperatursignal (25) verbunden ist, und
iii) ein Echtzeit-Fehlerausgangssignal erzeugt, das eine Funktion der Differenz zwischen dem Bezugstemperatursignal (36) und dem Druckkopftemperatursignal (25) ist, und

c) einer Vorrichtung zum Erzeugen von Regelkreis-Nichtdruck-Impulsen (24) während ausgewählter Druckintervalle, welche das Fehlerausgangssignal verwendet, um die Zeitpunkte der Regelkreis-Nichtdruck-Impulse (42; 142) und die von den Regelkreis-Nichtdruck-Impulsen (42) an den Druckkopf (26) abgegebene Energie zu steuern, um eine Echtzeit-Regelung der Temperatur des Druckkopfes (26) zu erreichen.

2. Vorrichtung nach Anspruch 1, mit weiterhin:

a) einem zweiten Fehlererfassungs-Verstärker (104), der

i) einen Eingang aufweist, der mit einem zweiten Bezugstemperatursignal (102) verbunden ist,
ii) einen Eingang aufweist, der mit dem Druckkopftemperatursignal (100) verbunden ist, und
iii) ein Fehlerausgangssignal erzeugt, das eine Funktion der Differenz zwischen dem zweiten Bezugstemperatursignal (102) und dem Druckkopftemperatursignal (100) ist, und

b) einer zweiten Vorrichtung zum Erzeugen von Regelkreis-Nichtdruck-Impulsen (106) in Echtzeit, welche das Fehlerausgangssignal verwendet, um den Zeitpunkt des Regelkreis-Nichtdruck-Impulses (142) und die von dem Regelkreis-Nichtdruck-Impuls (142) an den Druckkopf (128) abgegebene Energie zu steuern, um eine Echtzeit-Regelung der Druckkopftemperatur zu erreichen.

3. Vorrichtung nach Anspruch 1 oder 2, bei der die Vorrichtung zum Erzeugen der Regelkreis-Nichtdruck-Impulse (24) ferner Mittel zum Variieren der Energie, die von den Regelkreis-Nichtdruck-Impulsen (42) übertragen wird, durch Variieren der Breite der Regelkreis-Nichtdruck-Impulse (42) aufweist.

4. Vorrichtung nach einem der vorangehenden Ansprüche, bei der die Vorrichtung zum Erzeugen der Regelkreis-Nichtdruck-Impulse (24) ferner Mittel zum Variieren der Energie, die von den Regelkreis-Nichtdruck-Impulsen (42) übertragen wird, durch Variieren der Spannung der Regelkreis-Nichtdruck-Impulse (42) aufweist.

5. Vorrichtung nach einem der vorangehenden Ansprüche, bei der die Vorrichtung zum Erzeugen der Regelkreis-Nichtdruck-Impulse (24) ferner Mittel zum Variieren der Energie, die von den Regelkreis-Nichtdruck-Impulsen (42) übertragen wird, durch Variieren der Anzahl der Regelkreis-Nichtdruck-Impulse (42) in einem Druckintervall (46) aufweist.

6. Vorrichtung nach einem der vorangehenden Ansprüche, bei der die Regelkreis-Nichtdruck-Impulse (42) an einen Heizwiderstand (30) angelegt werden.

7. Verfahren zur Echtzeit-Regelung der Temperatur eines thermischen Tintenstrahldruckkopfes oder eines thermischen Druckkopfes (26) mit geschlossenem Regelkreis, mit folgenden Verfahrensschritten:

a) Erfassen der Temperatur des Druckkopfes (26),

b) Erzeugen eines Echtzeit-Druckkopftemperatursignals (25),

c) Vergleichen des Druckkopftemperatursignals (25) mit einem Bezugstemperatursignal (36),

d) Erzeugen eines Echtzeit-Fehlerausgangssignals, das eine Funktion der Differenz zwischen dem Bezugstemperatursignal (36) und dem Druckkopftemperatursignal (25) ist, und

e) Verwenden des Fehlerausgangssignals zum Steuern der Zeitpunkte von Regelkreis-Nichtdruck-Impulsen (42) und den von den Regelkreis-Nichdruck-Impulsen (42) an den Druckkopf (26) übertragenen Energie, um eine Echtzeit-Regelung der Druckkopftemperatur zu erreichen, wobei die Regelkreis-Nichtdruck-Impulse während ausgewählter Druckintervalle erzeugt werden.

8. Vorrichtung zum Steuern der Temperatur eines thermischen Tintenstrahldruckkopfes, mit einem thermischen Tintenstrahldruckkopf (70; 128), der Tinten-Heizwiderstände (68; 122) aufweist, und einer Impulserzeugungsvorrichtung (66; 126) zum Ansteuern jedes der Tinten-Heizwiderstände mit einem Druckimpuls während ausgewählter Druckintervalle und zum Ansteuern jedes Tinten-Heizwiderstands mit einem oder mehreren Nichtdruck-Impulsen während ausgewählter Druckintervalle, wenn ein Tinten-Heizwiderstand nicht mit einem Druckimpuls angesteuert wird.

9. Vorrichtung nach Anspruch 8, bei der der thermische Tintenstrahldruckkopf eine bekannte Energieübertragungscharakteristik hat, so daß X der Prozentsatz der Energie eines Druckimpulses ist, welcher auf einen ausgestoßenen Tintentropfen übertragen wird, und (100-X) der Prozentsatz der Energie des Druckimpulses ist, welcher von dem Druckkopf absorbiert wird, wobei ein Druckimpuls eine Energie $E_p(X/100)$ hat, die an einen Tinten-Heizwiderstand abgegeben wird, so daß der Tintentropfen eine Energie $E_p(X-100)$ trägt und der Druckkopf mit der verbleibender Energie E_p [(100-X)/100] erhitzt wird, und wobei einer oder mehrere Nichtdruck-Impulse eine Gesamtenergie von E_p [(100-X)/100] haben.

10. Verfahren zum Steuern der Temperatur eines thermischen Tintenstrahldruckkopfes (70), welcher einen Heizwiderstand (68) aufweist, mit folgenden Verfahrensschritten:

Ansteuern des Tinten-Heizwiderstands mit einem Druckimpuls während ausgewählter Druckintervalle, und Ansteuern des Tinten-Heizwiderstands mit mindestens einem Nichtdruck-Impuls während ausgewählter Druckintervalle, wenn der Tinten-Heizwiderstand nicht mit einem Druckimpuls angesteuert wird.

11. Verfahren nach Anspruch 10, bei dem der thermische Tintenstrahldruckkopf eine bekannte Energieübertragungscharakteristik hat, so daß X der Prozentsatz der Energie eines Druckimpulses ist, welcher auf einen ausgestoßenen Tintentropfen übertragen wird, und (100-X) der Prozentsatz der Energie des Druckimpulses ist, welcher von dem Druckkopf absorbiert wird, wobei ein Druckimpuls eine Energie $E_p(X/100)$ hat, die an einen Tinten-Heizwiderstand abgegeben wird, so daß der Tintentropfen eine Energie $E_p(X-100)$ trägt und der Druckkopf mit der verbleibender Energie E_p [(100-X)/100] erhitzt wird, und wobei einer oder mehrere Nichtdruck-Impulse eine Gesamtenergie von E_p [(100-X)/100] haben.

12. Vorrichtung nach Anspruch 8 oder 9 für die Echtzeit-Steuerung der Temperatur des thermischen Tintenstrahldruckkopfes (128) mit

einem offenen Schleifensystem (96), welches die Impulserzeugungsvorrichtung (126) zum Ansteuern jedes Tinten-Heizwiderstand (122) umfaßt, und einem geschlossenem Schleifensystem (94), mit

a) einem Temperatursensor (124) zum Erfassen der Temperatur des Druckkopfes und zum Erzeugen eines Echtzeit-Druckkopftemperatursignals (100),

b) einem Fehlererfassungsverstärker, der auf ein Bezugstemperatursignal (110) und das Druckkopftemperatursignal anspricht, um ein Echtzeit-Fehlerausgangssignal zu erzeugen, und

c) Mitteln zum Erzeugen von Regelkreis-Nichtdruck-Impulsen (114) während ausgewählter Druckintervalle, welche das Fehlerausgangssignal verwenden, um die Zeitpunkte der Regelkreis-Nichtdruck-Impulse und die von den Regelkreis-Nichtdruck-Impulsen (148) an den Druckkopf (128) abgegebene Energie zu steuern, um eine Echtzeit-Regelung der Druckkopftemperatur zu erreichen.

13. Vorrichtung nach Anspruch 12, bei der die Nichtdruck-Impulse (144) der offenen Schleife und die Regelkreis-Nichtdruck-Impulse (148) zu dem Heizwiderstand (122) übertragen werden, wodurch eine Steuerung der Druckkopftemperatur erreicht wird und keine zusätzlichen Widerstände notwendig sind.

14. Vorrichtung nach Anspruch 12 oder 13, mit weiterhin einem Summierknoten (116), der

i) einen Anschluß aufweist, der mit dem Ausgang des geschlossenen Schleifensystems (94) verbunden ist, und
ii) einen zweiten Anschluß aufweist, der mit dem Ausgang des offenen Schleifen-Energiesystems (96) verbunden ist, und
iii) die Regelkreis-Nichtdruck-Impulse, welche von dem geschlossenen Schleifensystem (94) erzeugt werden, und die Nichtdruck-Impulse, welche von dem offenen Schleifensystem erzeugt werden, kombiniert und die sich ergebenen Impulse an den Heizwiderstand (122) überträgt.

15. Vorrichtung nach Anspruch 12, 13 oder 14 mit einem weiteren geschlossenen Schleifensystem (92), das

a) einen zweiten Fehlererfassungsverstärker (104) aufweist, der

i) einen Eingang aufweist, der mit einem zweiten Bezugstemperatursignal (102) verbunden ist,
ii) einen Eingang aufweist, der mit dem Druckkopftemperatursignal (100) verbunden ist, und
iii) ein Fehlerausgangssignal erzeugt, das eine Funktion der Differenz zwischen dem zweiten Temperatursignal (102) und dem Druckkopftemperatursignal (100) ist, und

b) eine zweite Vorrichtung zum Erzeugen von Regelkreis-Nichtdruck-Impulsen (106) aufweist, welche das Fehlerausgangssignal zum Steuern des Zeitpunkts eines Regelkreis-Nichtdruck-Impulses (142) und der von dem Regelkreis-Nichtdruck-Impuls (142) an den Druckkopf (128) abgegebenen Energie verwendet, um eine Echtzeit-Regelung der Druckkopftemperatur zu erreichen.

Revendications

1. Dispositif pour la commande en temps réel et à boucle fermée de la température d'une tête d'impression à jet d'encre thermique ou d'une tête d'impression thermique (26 ; 128), comprenant :

a. un capteur de température (32) qui :

i. capte la température de la tête d'impression (26) ; et
ii. produit un signal (25 ; 100) de température de tête d'impression en temps réel ;;

b. un amplificateur de détection d'erreur (22) qui :

i. a une entrée connectée à un signal (36) de température de référence ;
ii. a une entrée connectée au signal (25) de température de la tête d'impression ; et
iii. engendre un signal de sortie d'erreur en temps réel qui est fonction de la différence entre le signal (36) de température de référence et le signal (25) de température de la tête d'impression ; et

c. un moyen servant à engendrer pendant des intervalles d'impression sélectionnés, des impulsions non génératrices d'impression (24) à boucle fermée, qui utilise le signal de sortie d'erreur pour régler le minutage des impulsions non génératrices d'impression (42 ; 142) à boucle fermée et l'énergie transmise par les impulsions non génératrices d'impression (42) à boucle fermée à la tête d'impression (46) pour obtenir une commande en temps réel, à boucle fermée de la température de la tête d'impression (26).

2. Dispositif selon la revendication 1, comprenant en outre :

a. un deuxième amplificateur (104) de détection d'erreur qui :

i. a une entrée connectée à un deuxième signal (102) de température de référence ;
ii. a une entrée connectée au signal (100) de température de la tête d'impression ; et
iii. engendre un signal de sortie d'erreur qui est fonction de la différence entre le deuxième signal (102) de température de référence et le signal (100) de température de la tête d'impression ; et

b. un deuxième moyen servant à engendrer des impulsions non génératrices d'impression (106) à bouche fermée en temps réel, qui utilise le signal de sortie d'erreur pour commander le minutage de l'impulsion de l'imprimante (142) à bouche fermée et l'énergie fournie par l'impulsion non génératrice d'impression (142) à bouche fermée à la tête d'impression (128) pour obtenir un réglage en temps réel, à bouche fermée, de la température de la tête d'impression.

3. Dispositif selon la revendication 1 ou 2, dans lequel le moyen servant à engendrer des impulsions non génératrices d'impression (24) à bouche fermée comprend en outre un moyen servant à faire varier l'énergie transmise par les impulsions non génératrices d'impression (42) à bouche fermée en faisant varier la largeur des impulsions non génératrices d'impression (42) à bouche fermée.

4. Dispositif selon une des revendications précédentes, dans lequel le moyen servant à engendrer les impulsions non génératrices d'impression (24) à bouche fermée comprend en outre un moyen servant à faire varier l'énergie transmise par les impulsions non génératrices d'impression (42) à bouche fermée en faisant varier la tension des impulsions non génératrices d'impression (42) à bouche fermée.

5. Dispositif selon une des revendications précédentes, dans lequel le moyen servant à engendrer des impulsions non génératrices d'impression (24) à bouche fermée comprend en outre un moyen servant à faire varier l'énergie transmise par les impulsions non génératrices d'impression (42) à bouche fermée en faisant varier le nombre des impulsions non génératrices d'impression (42) à bouche fermée dans un même intervalle d'impression (46).

6. Dispositif selon une des revendications précédentes, dans lequel les impulsions non génératrices d'impression (42) à bouche fermée sont appliquées à une résistance de tir (30).

7. Procédé de réglage en temps réel, à bouche fermée, de la température d'une tête d'impression à jet d'encre thermique ou d'une tête d'impression thermique (26), comprenant les phases consistant à :

   a. capter la température de la tête d'impression (26) ;
   b. produire un signal (25) de température de tête d'impression en temps réel ;
   c. comparer le signal (25) de température de tête d'impression à un signal (36) de température de référence ;
   d. engendrer un signal de sortie d'erreur en temps réel qui est fonction de la différence entre le signal (36) de température de référence et le signal (25) de température de tête d'impression ; et
   e. utiliser le signal de sortie d'erreur pour régler le minutage des impulsions non génératrices d'impression (42) à bouche fermée et l'énergie transmise par les impulsions non génératrices d'impression (42) à bouche fermée à la tête d'impression (26) pour réaliser un réglage de la température de la tête d'impression en temps réel, à bouche fermée, dans lequel les impulsions non génératrices d'impression à boucle fermée sont engendrées pendant des intervalles d'impression sélectionnés.

8. Dispositif pour commander la température d'une tête d'impression à jet d'encre thermique comprenant :

   une tête d'impression à jet d'encre thermique (70 ; 128) ayant des résistances (68 ; 122) de tir de l'encre ; et
   des moyens (66 ; 126) générateurs d'impulsions servant à attaquer chacune des résistances de tir d'encre avec une impulsion génératrice d'impression pendant chacun des intervalles d'impression sélectionnés contenant une impulsion génératrice d'impression, et attaquer chacune des résistances de tir d'encre avec une ou plusieurs impulsions non génératrices d'impression pendant chacun de plusieurs intervalles d'impression sélectionnés lorsqu'une résistance de tir d'encre n'est pas attaquée par une impulsion génératrice d'impression.

9. Dispositif selon la revendication 8, dans lequel la tête d'impression à jet d'encre thermique a une caractéristique de transmission d'énergie connue, qui est telle que X soit le pourcentage de l'énergie d'une impulsion génératrice d'impression qui est transmise à une goutte d'encre éjectée et que (100 - X) soit le pourcentage de l'énergie de l'impulsion génératrice d'impression qui est absorbée par la tête d'impression, dans lequel une impulsion génératrice d'impression a une énergie E_p destinée à être envoyée à une résistance de tir d'encre qui est telle que la goutte d'encre porte une énergie $E_p(X/100)$ et la tête d'impression est chauffée avec l'énergie restante $E_p[(100- X)/100]$, et dans lequel l'impulsion non génératrice d'impression ou les impulsions non génératrices d'impression ont une énergie totale de $E_p[(100-X)/100]$.

10. Procédé pour commander la température d'une tête d'impression à jet d'encre thermique (70) ayant une résistance de tir (68), comprenant les phases consistant à :

    attaquer la résistance de tir d'encre avec une impulsion génératrice d'impression pendant chacun de plusieurs intervalles d'impression sélectionnés ; et
    attaquer la résistance de tir d'encre avec au moins une impulsion non génératrice d'impression pendant chacun de plusieurs intervalles d'impression sélectionnés lorsque la résistance de tir d'encre n'est pas attaquée avec une impulsion génératrice d'impression.

11. Procédé selon la revendication 10, dans lequel la tête d'impression à jet d'encre thermique possède une caractéristique de transmission d'énergie connue qui est telle que X soit le pourcentage de l'énergie d'une impulsion génératrice d'impression transmise à une goutte d'encre éjectée et (100-X) soit le pourcentage de l'énergie de l'impulsion génératrice d'impression qui est absorbée par la

tête d'impression, dans lequel l'impulsion génératrice d'impression a une énergie E_p destinée à être fournie à une résistance de tir d'encre qui est telle que la goutte d'encre transporte une énergie $E_p(X/100)$ et la tête d'impression est chauffée avec l'énergie restante $E_p[(100-X)/100]$, et dans lequel l'impulsion non génératrice d'impression ou les impulsions non génératrices d'impression ont une énergie totale de $E_p[(100-X)/100]$.

12. Dispositif selon la revendication 8 ou 9, pour la commande en temps réel de la température de ladite tête d'impression à jet d'encre thermique (128), comprenant :

un système à boucle ouverte (96) comprenant ledit moyen générateur d' impulsions (126) servant à attaquer chacune des résistances de tir d'encre (122) ; et
un système à boucle fermée (94) comprenant :

(a) un capteur de température (124) destiné à capter la température de la tête d'impression et à produire un signal (100) de température de tête d'impression en temps réel ;
(b) un amplificateur de détection d'erreur qui répond à un signal (110) de température de référence et au signal de température de tête d'impression en engendrant un signal de sortie d'erreur en temps réel ; et
(c) un moyen servant à engendrer pendant des intervalles d'impression sélectionnés des impulsions non génératrices d'impression à boucle fermée (114), qui utilisent le signal de sortie d'erreur pour commander le minutage des impulsions non génératrices d'impression à boucle fermée et l'énergie fournie par les impulsions non génératrices d'impression à boucle fermée (148) à la tête d'impression (128) pour assurer une commande en temps réel, à boucle fermée, de la température de la tête d'impression.

13. Dispositif selon la revendication 12, dans lequel les impulsions non génératrices d'impression à boucle ouverte (144) et les impulsions non génératrices d'impression à boucle fermée (148) sont transmises à la résistance de tir (122), ce qui assure la commande de la température de la tête d'impression et supprime la nécessité d'une résistance additionnelle.

14. Dispositif selon la revendication 12 ou 13, comprenant en outre : un noeud additionneur (116) qui :

i. a une borne connectée à la sortie du système à boucle fermée (94) ; et
ii. a une deuxième borne connectée à la sortie du système d'énergie à boucle ouverte (96) ; et
iii. combine l'impulsion non génératrice d'impression à bouche fermée engendrée par le système à boucle fermée (94) et l'impulsion non génératrice d'impression à bouche ouverte engendrée par le système à bouche ouverte, et transmet les impulsions résultantes à la résistance de tir (122).

15. Dispositif selon la revendication 12, 13, ou 14, comprenant en outre : un deuxième système à bouche fermée (92) ayant :

a. un deuxième amplificateur de détection d'erreur (104) qui :

i. a une entrée connectée à un deuxième signal (102) de température de référence ;
ii. a une entrée connectée au signal (100) de température de tête d'impression ; et
iii. engendre un signal de sortie d'erreur qui est fonction de la différence entre le deuxième signal (102) de température de référence et le signal de température de tête d'impression ; et

b. un deuxième moyen servant à engendrer des impulsions non génératrices d'impression à bouche fermée (106) qui utilisent le signal de sortie d'erreur pour commander le minutage de l'impulsion non génératrice d'impression à bouche fermée (142) et l'énergie fournie à la tête d'impression (128) par l'impulsion non génératrice d'impression à boucle fermée pour assurer la commande en temps réel, à boucle fermée, de la température de la tête d'impression.

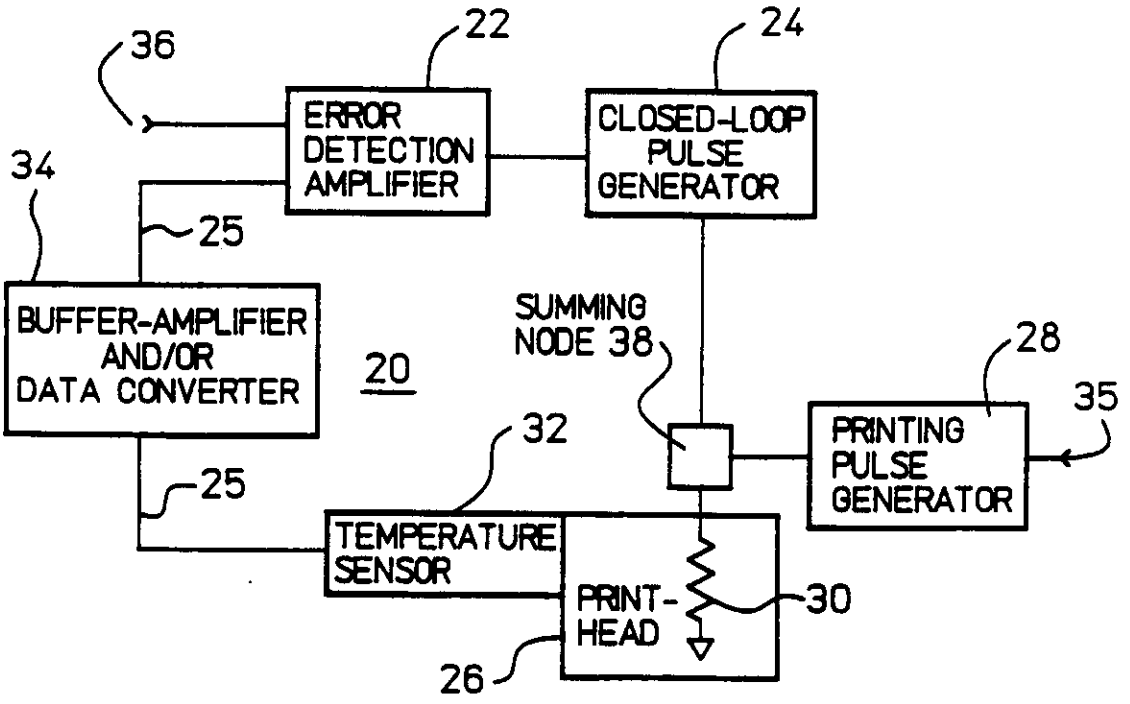
36
22
24
ERROR DETECTION AMPLIFIER
CLOSED-LOOP PULSE GENERATOR
34
25
BUFFER-AMPLIFIER AND/OR DATA CONVERTER
20
SUMMING NODE 38
28
35
PRINTING PULSE GENERATOR
32
25
TEMPERATURE SENSOR
PRINT-HEAD
30
26

FIG 1A

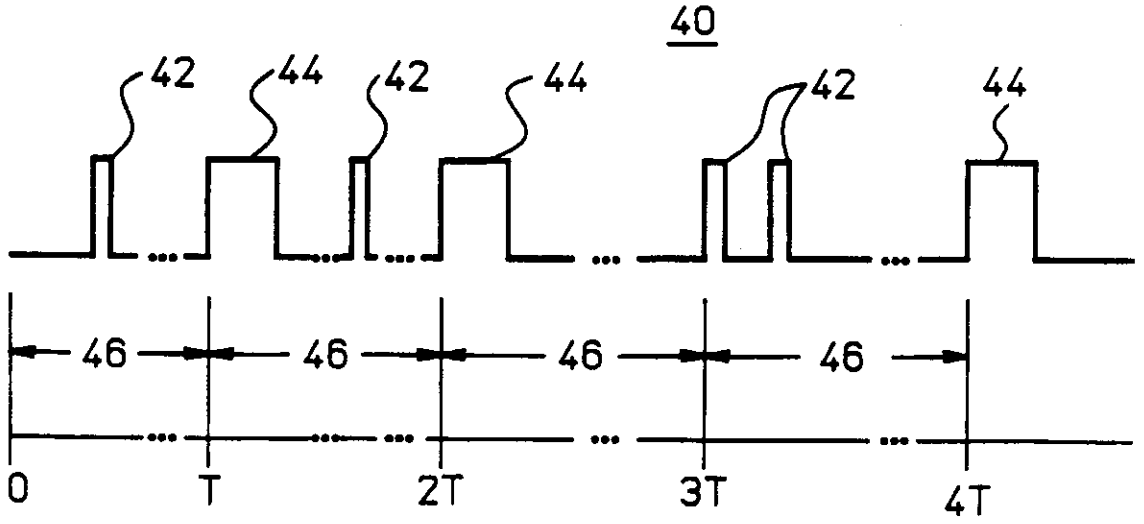
40
42
44
42
44
42
44
46
46
46
46
0
T
2T
3T
4T

FIG 1B

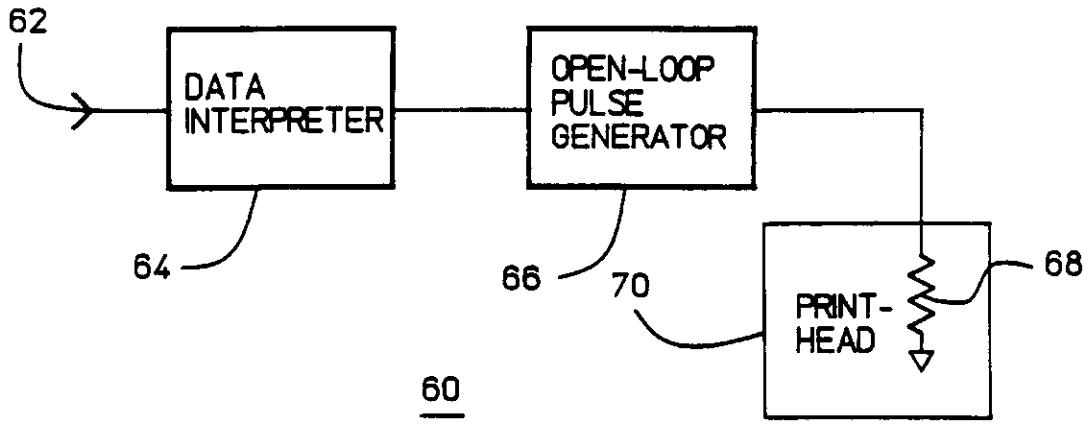

FIG 2A

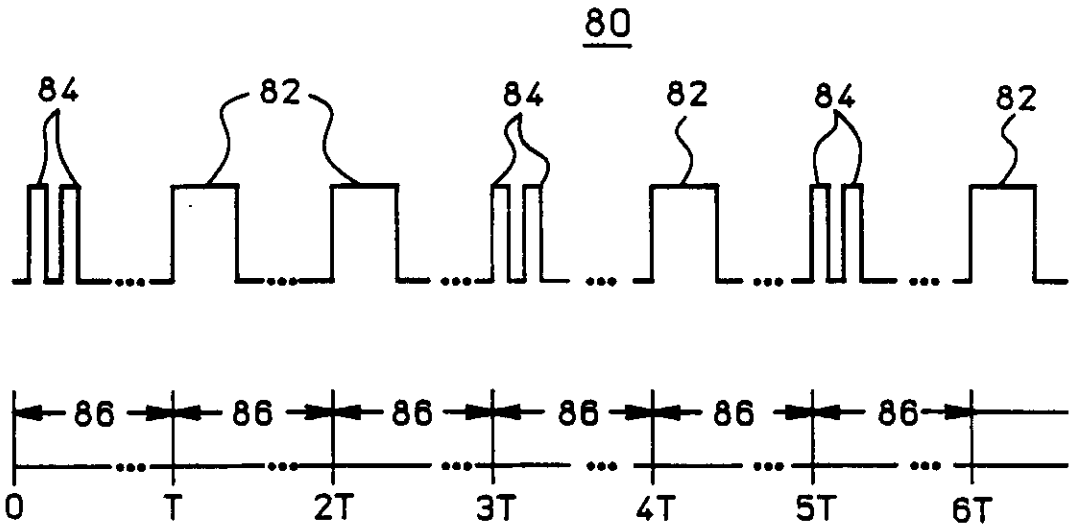

FIG 2B

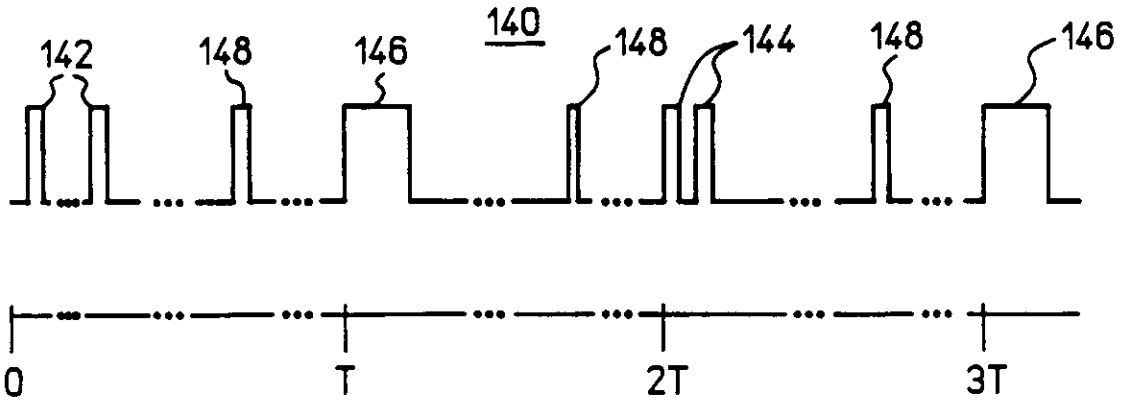

FIG 3B

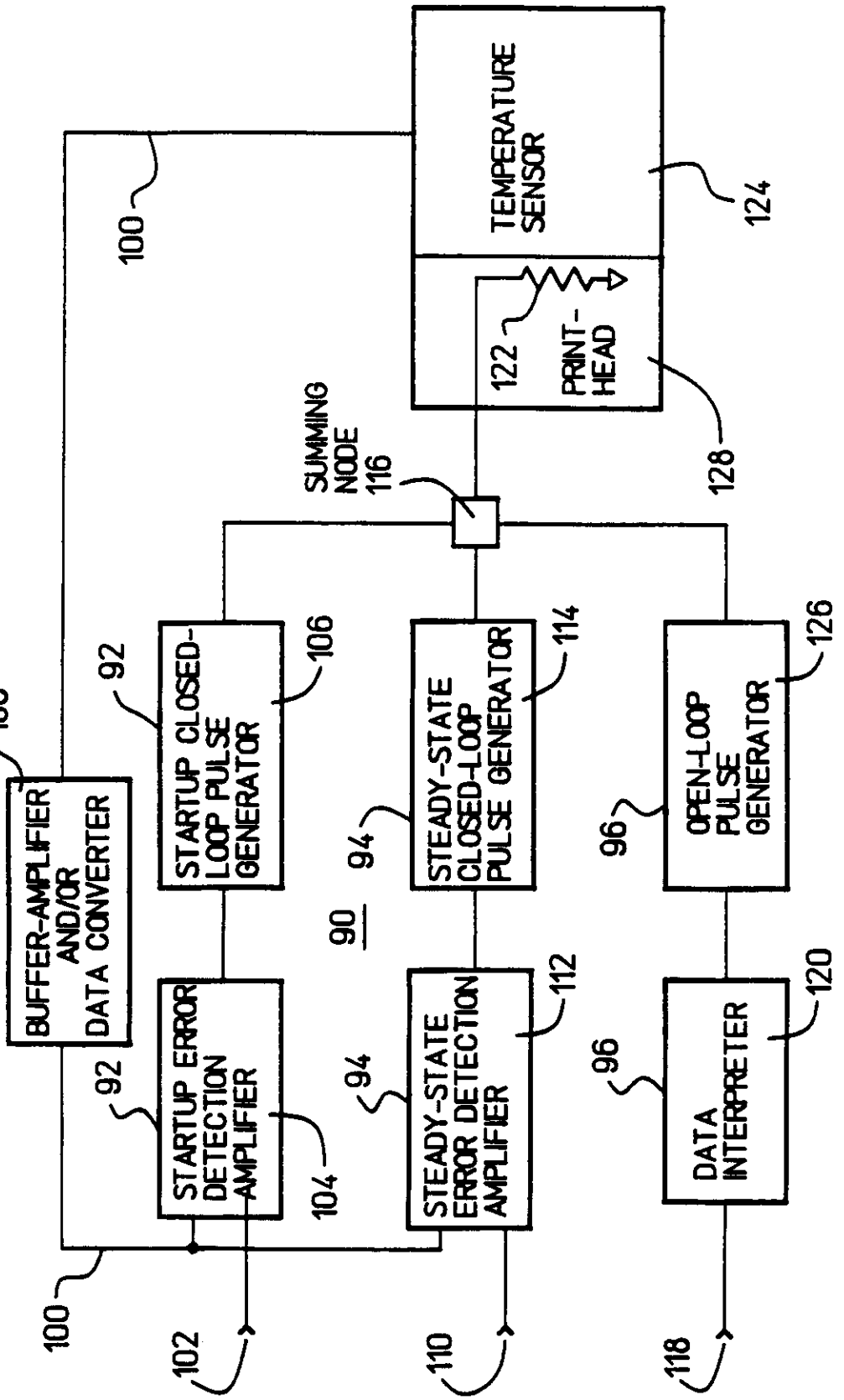
TEMPERATURE SENSOR
124
100
122
PRINT-HEAD
128
SUMMING NODE 116
BUFFER-AMPLIFIER AND/OR DATA CONVERTER
108
92
STARTUP CLOSED-LOOP PULSE GENERATOR
106
STEADY-STATE CLOSED-LOOP PULSE GENERATOR
114
94
OPEN-LOOP PULSE GENERATOR
126
96
90
STARTUP ERROR DETECTION AMPLIFIER
104
STEADY-STATE ERROR DETECTION AMPLIFIER
112
DATA INTERPRETER
120
100
102
110
118

FIG 3A

REGISTER ENTRY FOR EP0511602

European Application No EP92107065.2 filing date 24.04.1992

Priority claimed:
01.05.1991 in United States of America - doc: 694185

Designated States DE FR GB IT

Title METHOD AND APPARATUS FOR CONTROLLING THE TEMPERATURE OF THERMAL INK JET AND THERMAL PRINTHEADS THROUGH THE USE OF NONPRINTING PULSES.

Applicant/Proprietor
HEWLETT-PACKARD COMPANY, 3000 Hanover Street, Palo Alto, California 94304, United States of America [ADP No. 50014570004]

Inventor
KING-WAH W. YEUNG, 10129 Mello Place, Cupertino, CA 95014, United States of America [ADP No. 60261278001]

Classified to
B41J

Address for Service
HEWLETT-PACKARD LIMITED, Building 2, Filton Road, Stoke Gifford, BRISTOL, BS12 6QZ, United Kingdom [ADP No. 00001933005]

EPO Representative
ROLAND LIESEGANG DR.-ING., FORRESTER & BOEHMERT Franz-Joseph-Strasse 38, W-8000 München 40, Federal Republic of Germany [ADP No. 50272772001]

Publication No EP0511602 dated 04.11.1992
Publication in English

Examination requested 29.01.1993

Patent Granted with effect from 11.09.1996 (Section 25(1)) with title METHOD AND APPARATUS FOR CONTROLLING THE TEMPERATURE OF THERMAL INK JET AND THERMAL PRINTHEADS THROUGH THE USE OF NONPRINTING PULSES

09.08.1996 Notification from EPO of change of EPO Representative details from
ROLAND LIESEGANG DR.-ING., FORRESTER & BOEHMERT
Franz-Joseph-Strasse 38, W-8000 München 40, Federal Republic of Germany [ADP No. 50272772001]
to
ROLAND LIESEGANG DR.-ING., FORRESTER & BOEHMERT
Franz-Joseph-Strasse 38, 80801 München, Federal Republic of Germany [ADP No. 50272772001]
Entry Type 25.14 Staff ID. RD06 Auth ID. EPT

**** END OF REGISTER ENTRY ****

RENEWAL DETAILS

PUBLICATION NUMBER EP0511602

PROPRIETOR(S)

Hewlett-Packard Company, 3000 Hanover Street, Palo Alto, California 94304, United States of America

DATE FILED 24.04.1992

DATE GRANTED 11.09.1996

DATE NEXT RENEWAL DUE 24.04.1997

DATE NOT IN FORCE

DATE OF LAST RENEWAL

YEAR OF LAST RENEWAL 00

STATUS PATENT IN FORCE

**** END OF REPORT ****