April 29, 1969 HO CHOW 3,441,300

LINKAGE JOINTS

Original Filed Oct. 4, 1965 Sheet 1 of 4

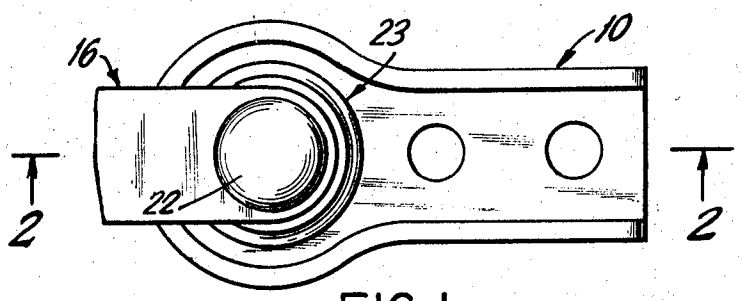

FIG. 1

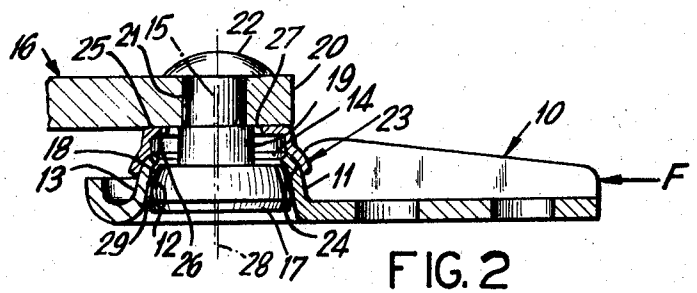

FIG. 2

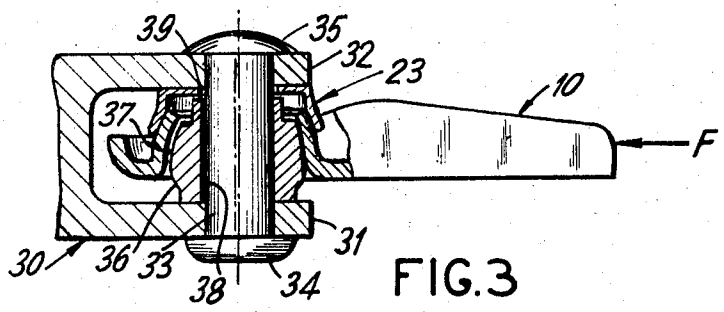

FIG. 3

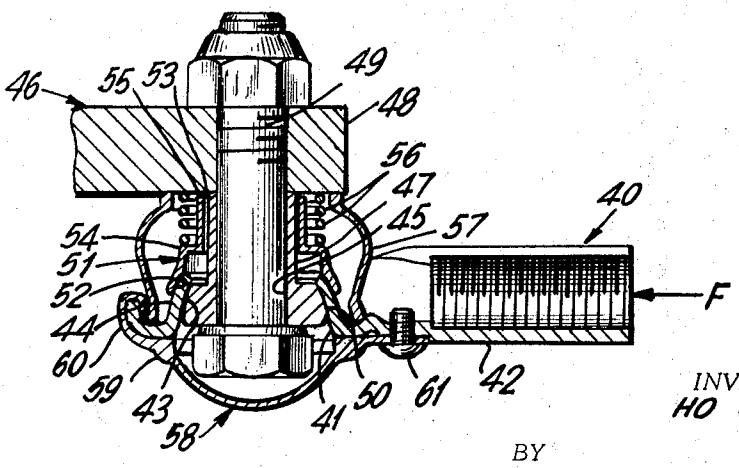

FIG. 4

INVENTOR.
HO CHOW

BY

Davis, Hoxie, Faithfull & Hapgood
ATTORNEYS

April 29, 1969 HO CHOW 3,441,300

LINKAGE JOINTS

Original Filed Oct. 4, 1965 Sheet 2 of 4

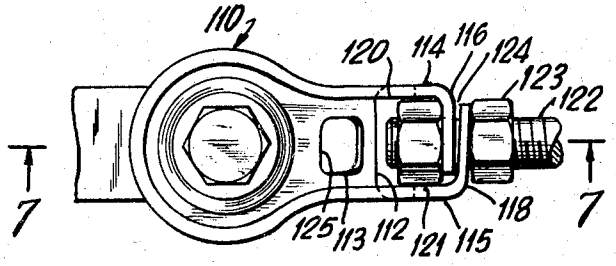

FIG. 5

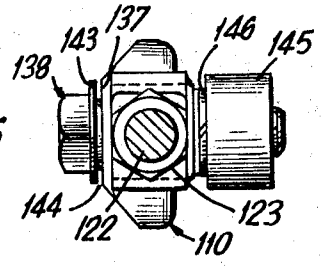

FIG. 6

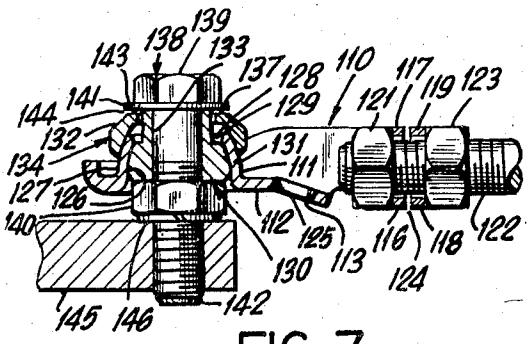

FIG. 7

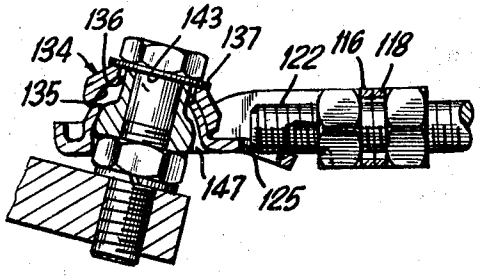

FIG. 8

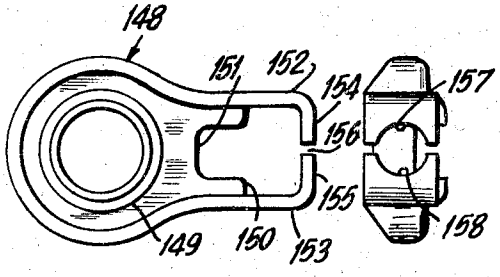

FIG. 9

FIG. 10

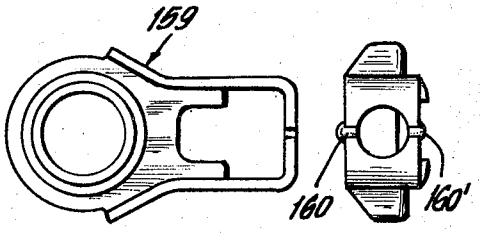

FIG. 11

FIG. 12

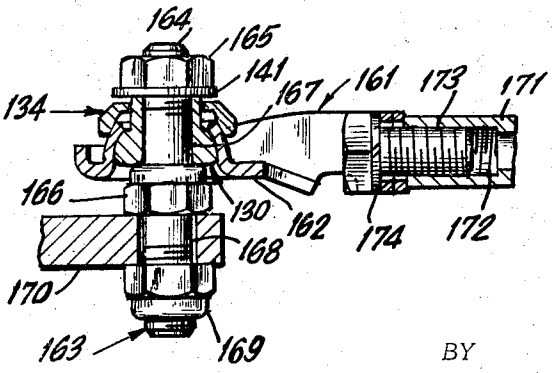

FIG. 13

INVENTOR.
HO CHOW

BY

Davis, Hoxie, Faithfull & Hapgood
ATTORNEYS

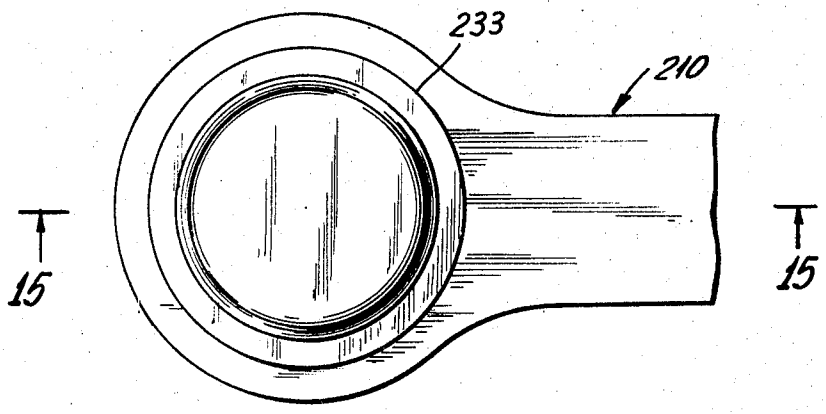

FIG. 14

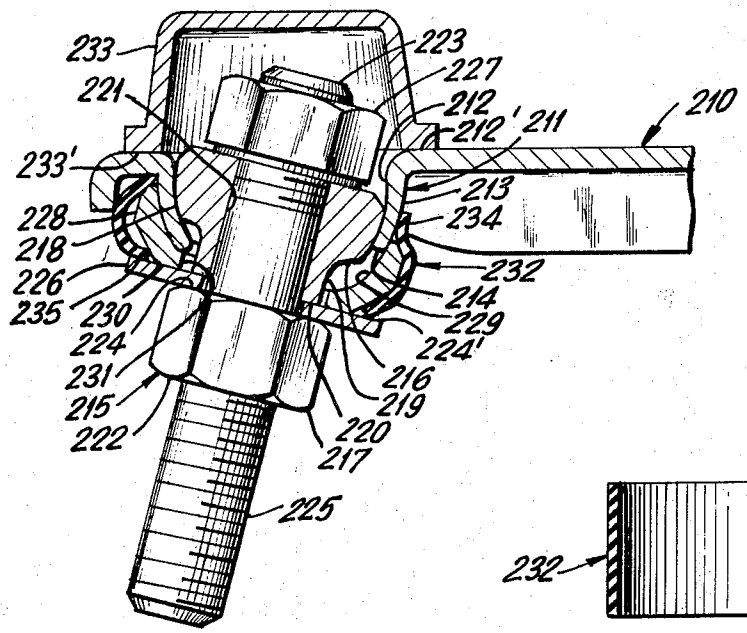

FIG. 15

FIG. 16

INVENTOR.
HO CHOW

BY

Davis, Hoxie, Faithfull & Hapgood
ATTORNEYS

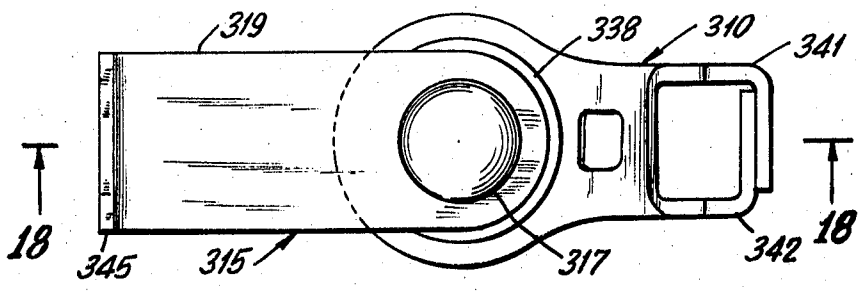

FIG. 17

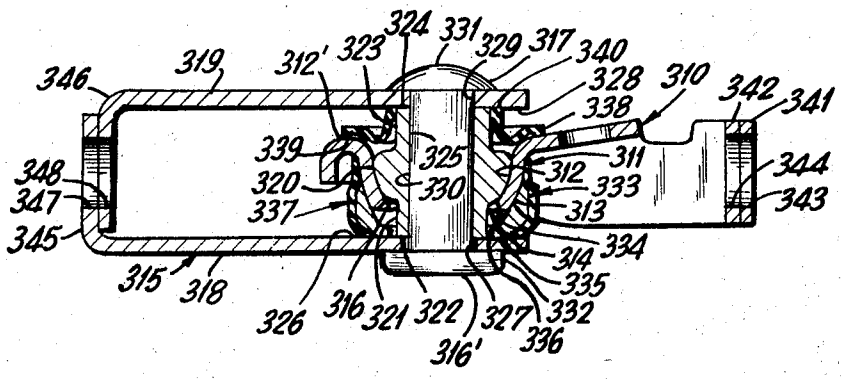

FIG. 18

INVENTOR.
HO CHOW

BY

Davis, Hoxie, Faithfull & Hapgood
ATTORNEYS

United States Patent Office 3,441,300 Patented Apr. 29, 1969

3,441,300

LINKAGE JOINTS

Ho Chow, River Edge, N.J., assignor to The Heim Universal Corporation, Fairfield, Conn., a corporation of Delaware

Application Oct. 4, 1965, Ser. No. 496,247, now Patent No. 3,333,876, dated Aug. 1, 1967, which is a continuation-in-part of applications Ser. No. 164,817, Jan. 8, 1962, Ser. No. 225,825, Sept. 24, 1962, Ser. No. 278,004, May 6, 1963, and Ser. No. 480,243, Aug. 5, 1965. Divided and this application Mar. 15, 1967, Ser. No. 644,037

Int. Cl. F16c *11/06*; F16b *7/00*; B25g *3/38*

U.S. Cl. 287—90 2 Claims

This is a division of application Ser. No. 496,247, filed Oct. 4, 1965 and now Patent No. 3,333,876 which, in turn, is a continuation-in-part of U.S. patent application Ser. No. 164,817, filed Jan. 8, 1962 and now abandoned; U.S. patent application Ser. No. 225,825, filed Sept. 24, 1962 and now abandoned; U.S. patent application Ser. No. 278,004, filed May 6, 1963 and now abandoned; and U.S. patent application Ser. No. 480,243, filed Aug. 5, 1965.

This invention relates to an improved linkage joint to provide a limited tilting movement and a complete rotative movement between two members.

Linkage joints to join two members provide some degree of tilting and complete rotation of one member relative to another. They are widely used in various machines. It has long been a goal to provide such linkages having relatively low friction and long life at a low cost.

According to this invention, a linkage joint includes a bowl-shaped member having an internal surface, an external surface and an end aperture opposite its open portion. A pin passes freely through the end aperture. In one embodiment the pin has an integral inner head in bearing contact with the internal surface of the hollow ball and a shoulder forming a ledge. In another embodiment a bushing surrounds the shank of the pin and is in bearing contact with the internal surface of the bowl. The bushing rotates freely on the pin member. The bushing is held by the lower head of the pin. The bushing has a tubular upper aperture which protrudes through the bowl-shaped member. In both embodiments the bolt has an outer head spaced with respect to the hollow ball by means of the shoulder on the pin or the shoulder formed by the top of the tubular portion of the bearing. A retainer is positioned so that it has a surface in bearing contact with the external surface of the hollow ball and has a plane bearing surface in contact with the outer head of the pin. The pin passes through a hole in the retainer. There is no limitation in the movement of the pin's outer head along the retainer's plane bearing surface. This assembly permits a limited tilting movement and a complete rotative movement between the bowl-shaped member and pin.

For the purpose of describing the present invention, the term "ball member" means the sheet metal member having the bowl shaped or "hollow ball" portion; "stud member" means the pin's shank, the pin's outer head and the pin's inner head; the "inner head" of the "stud member" means the bushing on the shank in one embodiment or the integral lower portion of the pin's shank in the other embodiment. The term "pin" includes a threaded bolt, rivet body, or other type of coupling member.

Features of this invention include an insert head at the inner head of the stud member having a bearing surface in bearing contact with the internal surface of the hollow ball; that the internal surface of the hollow ball has one of its boundaries at an equatorial circle; a spring between the outer head of the stud member and the retainer; and a dynamic seal forming a completely sealed linkage joint.

It is the objective of the present invention to provide a bearing assembly which is inexpensive in that it is constructed out of sheet metal and easily produced parts and provides limited tilting and complete rotative motion on bearing surfaces.

With the above and other objects in view the invention comprises certain new and useful constructions, combinations and arrangements of parts, clearly described in the following specification and fully illustrated in the drawings, in which:

FIG. 1 is a plan view of a linkage joint according to this invention;

FIG. 2 is a partial cross-sectional view thereof, taken on the line **2—2** of FIG. 1, looking in the direction of arrows;

FIG. 3 is a partial cross-sectional view of a modified form of the linkage joint according to this invention;

FIG. 4 is a partial cross-sectional view of another modified form of the present invention of linkage joints;

FIG. 5 is a plan view of another embodiment of a linkage joint constructed according to this invention;

FIG. 6 is a side view of FIG. 5, looking in the direction of the arrow **6** of FIG. 5;

FIG. 7 is a partial cross-sectional view of FIG. 5, taken on the line **7—7** of FIG. 5, looking in the direction of arrows;

FIG. 8 is the same cross-sectional view as FIG. 7 except in a tilted and loaded condition;

FIG. 9 is a plan view of another modified form of the ball member of the linkage joint constructed according to this invention;

FIG. 10 is a side view of FIG. 9;

FIG. 11 is a plan view of another modified form of the ball member of the linkage joint constructed according to this invention;

FIG. 12 is a side view of FIG. 11;

FIG. 13 is a partial cross-sectional view of a modified form of the linkage joint according to this invention;

FIG. 14 is a plain view of another embodiment of a linkage joint constructed according to this invention;

FIG. 15 is a partial cross-sectional view of FIG. 14, taken on the line **15—15** of FIG. 14, looking in the direction of arrows;

FIG. 16 is a cross-sectional view of the elastic sleeve of FIGS. 14 and 15 before assembling;

FIG. 17 is a plain view of another embodiment of a linkage joint constructed according to this invention; and

FIG. 18 is a partial cross-sectional view of FIG. 17, taken on the line **18—18** of FIG. 17, looking in the direction of arrows.

In the drawing, FIGS. 1 and 2 show a linkage joint constructed with a ball member **10** having a hollow ball **11**. The hollow ball is formed to provide an internal segmental spherical bearing surface **12**, an external segmental spherical bearing surface **13** and an aperture **14**. Surfaces **12** and **13** have their centers as close as possible on a center line **15**.

A stud member **16** has an inner head **17** which has an external bearing surface **18** in bearing contact with the internal segmental spherical bearing surface **12** of the hollow ball **11**. A shank **19** passes freely through the aperture **14**. An outer head **20** on the member **16** is fixed permanently or rigidly on a rivet portion **21** next to the shank **19** and beyond the hollow ball **11** by a head **22** on the rivet portion **21**.

A retainer **23** has an internal circumferentially continuous bearing surface **24** in bearing contact with the surface **13** of the ball member **10** and a plane or flat annular bearing surface **25** in bearing contact with a flat surface **26** on the outer head **20**. The retainer also has a hole **27**

larger in diameter than the shank 19 of the stud member 16.

The stud member 16 has a center line 28 which is displaced from the center line 15 while a radial force, designated by F, is applied, due to a bearing clearance 29 illustrated in an exaggerated manner between the surface 12 of the hollow ball 11 and the surface 18 of the head 17. The hole 27 in the retainer 23 is made large enough to avoid any physical contact with the shank 19 to allow a free movement of the bearing surface 25 on the surface 26 of the head 20 under the displaced condition between the ball and stud members.

In this construction, the stud member can tilt through a limited range and rotate through a complete circle on the ball member. Depending on frictional condition, the retainer 23 will mostly rotate with the ball member 10 by reason of its engagement with the hollow ball 11.

In FIG. 3, a modified form of this invention is shown, wherein similar parts are modified. The ball member 10 and the retainer 23 are the same as shown in FIG. 2, while the stud member is constructed differently for the same or similar function. The stud member 30 has an inner head 31, an outer head 32 and a pin 33 between the two heads 31 and 32 passing freely through the aperture 14 of the ball member 10 or the hollow ball 11 thereof. The two heads 31 and 32 are integrally joined, as illustrated. However, these two heads could be separated, due to the presence of heads 34 and 35 on the pin 33. An insert head 36 constitutes part of the head portion of the stud member and is mounted on the pin 33. The head 36 has an external bearing surface 37 in bearing contact with the internal segmental spherical bearing surface of the hollow ball 11 of the ball member 10 with an exaggerated bearing clearance under the radial load F and a hole 38 which could engage securely to the pin 33 of the stud member 30.

However, in the construction shown in FIG. 3, the head 36 serves as a bushing which will rotate freely on the stud member 30 against the pin 33 and the inner head 31 with an exaggerated bearing clearance 39 under the radial load F.

It will also appear from a consideration of FIG. 3 that the annular flat surface of the retainer 23 engages a flat surface of the head 32 of the stud member 30. In other words, the retainer 23 of FIG. 3 operates in the same manner as the retainer 23 of FIG. 2.

FIG. 4 shows another modified form of the invention. In this figure, a ball member 40 has a hollow ball 41 and an end 42 with internal thread. The hollow ball 41 has an internal segmental spherical bearing surface 43 and an external segmental spherical bearing surface 44, as well as a central aperture 45. A stud member 46 has an insert head 47, an outer head 48 and a bolt 49. The bolt 49 holds the head 47 and the outer head 48 together with part of 47 arranged in the aperture 45 of the ball member 40. The head 47 has an external bearing surface 50 in bearing contact with the surface 43 of the ball member 40. A retainer 51 extends between the hollow ball 41 and the outer head 48 and has an internal bearing surface 52 in bearing contact with the surface 44. The retainer 51 also has a hole 53 and a shoulder 54. The hole 53 is large enough to avoid any physical contact with any adjacent portion of the head 47, except in having a bearing contact with the outer head 48. The retainer 51 also has an end 55, which will limit the axial movement in the direction of the bolt axis between the ball and stud members and will serve as a bearing surface of the plane type against the outer head 48 with a free movement along the plane bearing surface of the head. The gap between the end 55 and the outer head 48 is exaggerated for illustration purpose. A compression spring 56 is provided between the shoulder 54 of the retainer 51 and the outer head 48, while permitting a free rotation between the retainer 51 and the outer head 48.

When a radial force F is applied between the ball and stud members, an axial force, in the axial direction of the bolt will tend to move the ball member towards the outer head. If this axial force is smaller than the preloaded force of the spring 56, there will be no radial movement between the ball and stud members. When the axial force exceeds the preloaded spring force, the ball member will move towards the outer head of the stud member until the end of the retainer 51 in contact with the outer head 48 (or the spring becomes solid) and a limited bearing clearance will be formed between the internal segmental spherical bearing surface 43 of the ball member 40 and the external bearing surface 50 of the head 47 as a part of the stud member.

A dynamic seal 57 of the bellow type is engaged between the stud and ball members and a cover 58 with a seal member 59 is secured to the ball member to cover the inner head of the stud member by means of prongs 60 and a screw 61.

If the stud member is connected at the inner head side, then the dynamic seal and the cover will be reversed accordingly. If the stud member is connected at both the inner and the outer heads, then two dynamic seals must be provided in order to seal all bearing surfaces.

In the drawing, FIGS. 5, 6, 7 and 8 show a linkage joint constructed with a ball member 110 having a hollow ball 111, a web 112 with a hole 113 and two flanges 114 and 115. The flange 114 has a leg 116 which has an end hole 117 and the other flange 115 has a leg 118 which has an end hole 119 approximately in line with the end hole 117. The center line of these end holes 117 and 119 is at almost 90 degrees to the center line of the hollow ball and passes near the center of the hollow ball 111 as normally required in many cases. The web 112, the flanges 114 and 115 and the legs 116 and 118 form an opening 120 which can receive a fastening member such as a nut 121. A threaded link 122 having a nut 123 passes the end holes 117 and 119 freely and is engaged with the nut 121. Before the nuts are tightened on the threaded rod 122 against the legs 116 and 118, there will be a slight gap 124 between the two legs 116 and 118 in order to facilitate manufacturing as shown in FIGS. 5 and 7. Upon tightening, this gap 124 will be disappeared as shown in FIG. 8. This gap 124 can practically be reduced to zero in production, if necessary. The threaded rod 122 can be turned in or out as shown in FIGS. 7 and 8 for the length adjustment as required in many practical applications. The hole 113 is provided for avoiding any interference with the threaded rod 122 and a stop 125, for preventing the threaded rod to move too much inward to interfere with the moving elements of the linkage joint.

For some usages, as shown in these figures, the flanges 114 and 115 have a width just equal or less than the hexagon width of the nut 121 in order that the nut might be held with a wrench for tightening purposes. Besides, the width of the opening 120 between the flanges 114 and 115 is slightly wider than the corner width of the hexagon of the nut 121, so that the nut 121 can be rotated freely on the threaded rod 122 for the engagement and length adjustment.

In some usages, the opening 120 between the flanges 114 and 115 is slightly larger than the hexagon width of the nut 121 but smaller than the corner width of the hexagon of the nut 121 so that the threaded rod 122 can be turned without holding a wrench on the nut 121.

The hollow ball 111 is formed to provide an internal segmental spherical bearing surface 126, an external segmental spherical bearing surface 127 and an aperture 128. It is desirable to have one of the boundaries of the internal segmental spherical bearing surface terminated at an equatorial circle of the surface. The aperture 128 has a conical wall 129 which is desirable for serving as a stop as to be explained in a later part. The surfaces 126 and

127 have a common center as close as possible in production which is called the center of the hollow ball.

A bushing **130** has a ball portion **131** in bearing contact with the internal segmental spherical bearing surface **126** of the hollow ball **111**, a sleeve portion **132** passing through the aperture **128** of the hollow ball **111** and a center hole **133** through both ball and sleeve portions **131** and **132**.

A retainer **134** has an internal bearing surface shown in a conical shape **135** in FIGS. 7 and 8 (or a segmental spherical bearing surface as shown in FIG. 13) in bearing contact with the external segmental spherical bearing surface **127**, an aperture **136** which will not be in contact with the sleeve portion **132** of the bushing **130** under any condition and an annular flat bearing surface **137**.

A stud member **138** consists of a screw **139**, a nut **140** and a washer **141**. A threaded shank **142** of the screw **139** passes the washer **141** and the center hole **133** of the bushing **130**, and the bushing **130** and the washer **141** are clamped tightly between the head of the screw **139** and the nut **140** upon the tightening of the nut on the threaded shank **142**. The screw and the nut location can be reversed to perform exactly the same function. A surface of **143** of the washer **141** is slightly spaced from or in bearing contact with the flat bearing surface **137** of the retainer **134**. This washer can be eliminated, if the head of the screw **139** or the nut **140** is large enough to provide a bearing surface. Other fastening devices, such as rivets and eyelets can be provided instead of the screw and the nut.

There is a clearance **144** betwen the surfaces **143** and **137**. This clearance **144** can be varied considerably, if the bushing **130** and the retainer **134** are made with a wide tolerance in order to achieve a low cost. In order to maintain the quality of the linkage joint, this clearance **144** must be held to a minimum. The sleeve portion **132** of the bushing **130** is capable of being shortened upon the turning of the nut **140** on the threaded shank **142** of the screw **139**, while the size of the ball portion **131** of the bushing is almost not affected due to this adjustment of the bearing clearance. Therefore, it is so important to have the whole shape of the bushing **130** properly engineered and made. It has been found that sintered bearing materials (by powder metallurgy) and plastics such as nylon and Delrin are capable of being shortened a considerable amount by compression of the sleeve portion of the bushing without cracking or bursting. Delrin as mentioned above is the registered DuPont trade name for acetal resins.

After the adjustment of the clearance **144**, is is desirable to have the nut **140** locked on the threaded shank **142** of the screw **139** by any mechanical means or a liquid sealant such as Loctite which is a trade name of the American Sealant Company to avoid any accidental change of this desirable clearance.

Under the most severe mounting of this linkage, the threaded shank **142** of the screw **139** is further mounted in arm **145** with a lockwasher **146** by turning the head of the screw **139**. The locking action between the screw **139** and the nut **140** should be so strong that the tightening and loosening of the screw **139** in the arm **145** with the lockwasher **146** shall not affect the preset clearance **144**.

Under the extreme tilting condition as shown in FIG. 8, the conical surface **129** of the hollow ball **111** will be in contact with the sleeve portion **132** of the bushing **130** to serve as an internal positive stop for the tilting movement.

Under an external load as shown by the arrow on the link **122** in FIG. 8, the hollow ball **111** of the ball member **110** is shifted on the bushing **130** towards the retainer **134** to form a clearance **147**, shown in an exaggerated manner, and the clearance **144** has disappeared by bearing the retainer **134** on the washer **141**.

In this construction, the stud member can tilt through a limited range and rotate through a complete circle or any part of it on the ball member. Under working condition as shown in FIG. 8, the frictional force between the ball member and the retainer is normally higher than that between the retainer and the stud member, therefore the retainer **134** will rotate with the ball member **110** except to accommodate the tilting motion between them. Therefore, in this construction, a large bearing surface between the retainer and the hollow ball is not required due to their low rubbing velocity.

FIGS. 9 and 10 show a modified ball member **148** of a linkage joint having a hollow ball **149** as described above, a web **150** with a stop **151** and two flanges **152** and **153**. Each flange has a leg **154** and **155** which are separated slightly with a gap **156**. Each leg has a notch **157** and **158** which forms a hole to receive a link member.

FIGS. 11 and 12 show another modified ball member **159** of a linkage joint which is similar to that as shown in FIGS. 9 and 10 except a part of the flange near the hollow ball is removed and the gap between these two legs is filled with welding material **160** and **160'** for additional strength to prevent the legs from separation.

In FIG. 13, a modified form of this invention is shown, wherein similar parts are modified. The ball member **161** is the same as shown in FIGS. 5, 6 and 7, except the web **162** having the shape as shown in FIG. 9. The bushing **130** and the retainer **134** are the same as shown in FIG. 6 except the shape of the internal bearing surface of the retainer **134**, while the stud member is constructed differently for the same or similar function.

The stud member **163** includes a stud **164**, a nut **165** and a washer **141**. The stud **164** has an integral hexagon portion **166** and a threaded shank **167** which engages with the nut **165** to perform the same function as shown in FIG. 7 and the threaded shank **168** engages with another nut **169** for mounting to an arm **170**.

The ball member **161** is connected with a connecting link **171** which has a tapped hole **172**. A screw **173** with a lockwasher **174** is placed in the end holes and engages tightly with the connecting link **171**. In this construction, the connecting link can be in any shape, such as a flat plate or any part of a structure.

The embodiment of FIGS. 14 and 15, which is similar to the other embodiments in some respects, is a ball joint construction with a ball member **210** having a hollow ball **211**. The hollow ball is formed to provide an internal segmental spherical bearing surface **212**, an external segmental spherical bearing surface **213**, an end hole **214** and an annular surface **212'** adjacent to the surface **212**. Surfaces **212** and **213** have their centers as close as possible.

An element **215** consists of a bushing **216** and a holder **217**. The bushing has a surface **218** in contact with the internal bearing surface **212** of the hollow ball **211**, a sleeve portion **219** which passes loosely through the end hole **214**, an end surface **220** and a hole **221**. The holder **217** has a hexagon body **222**, a threaded shank **223** at one end, a shoulder **224** on the hexagon body **222** and a threaded rod **225** at the other end. The threaded shank **223** fits in the hole **221** of the bushing **216**. The threaded rod **225** is provided for further connection of the element and can be made in any shape.

A washer **226** is provided on the shoulder **224** to provide a flat surface **224'**, when the shoulder **224** is not large enough or is a poor material for serving as a bearing. The holder **217** also has a nut **227**.

By engaging and tightening the nut **227** on the threaded shank **223**, the flat surface **224'** is engaged with the end surface **220** of the bushing **216**. The bushing **216**, the holder **217** and the washer **226** become the integral element **215**. Any fastening means can be provided to form the holder **217**.

A retainer **228** has an internal surface **229** in bearing contact with the external surface **213** of the hollow ball **211**, a plane bearing surface **230** in bearing contact with the flat surface **224'** and an aperture **231** which will not

touch the sleeve portion **219** of the bushing **216**. The internal surface **229** can be a conical shape as shown in FIG. 15.

An elastic sleeve **232** and a cover **233** are further provided. The elastic sleeve **232** is provided for sealing bearing surfaces and/or preventing vibration noises. This elastic sleeve is preferred in a hollow cylindrical shape before assembling, as shown in FIG. 16, and is stretched and wrapped over the retainer **228**. One end **234** of the elastic sleeve **232** is stretched and engaged with the external surface **213** of the hollow ball **211** and the other end **235** tensionally engages the flat surface **224'**. This elastic sleeve **232** will allow the free relative movements of the ball member **210**, the element **215** and the retainer **228** one with respect to the other.

In order to form a completely sealed ball joint and to provide an ample space for reserving a lubricant to reach the bearing surfaces, the cover **233** is provided. The cover **233** has a surface **233'** welded, bonded or otherwise fixed to the surface **212'** of the ball member **210**.

The cover **233** can be provided with a grease fitting (not shown) for injecting a lubricant therein. This cover also can be made from a material which can receive a needle for injecting a lubricant and will close the aperture by itself upon the withdrawal of the needle.

In this construction, the element **215** can tilt through a limited range and rotate through a complete circle or any part of it in the ball member **210** and the retainer has a free floating movement.

In FIGS. 17 and 18, another embodiment of this invention is shown, wherein similar parts are modified for achieving the similar purposes.

A ball member **310** has a hollow ball **311**, which is formed to provide an internal segmental spherical bearing surface **312**, an external segmental spherical bearing surface **313**, an end hole **314** and a surface **312'** adjacent to the surface **312**.

An element **315** consists of a bushing **316** and a holder **316'**. The holder **316'** has a rivet or stud **317** and two bar members **318** and **319** which can be an integral part. The bushing **316** has a surface **320** in contact with the internal surface **312** of the hollow ball **311**, a sleeve portion **321** at one side, which passes loosely through the end hole **314**, an end surface **322**, an extension **323** at the other side, another end surface **324** and a hole **325**. The bar member **318** is engaged with the end surface **322** and has a flat surface **326** and a hole **327**. The other bar member **319** is engaged with the other end surface **324** and has a surface **328** and a hole **329**. The rivet **317** has a shank **330**, which fits the holes **325**, **327** and **329**, and a head **331** which is engaged with the bar member **319**. By staking the end of the shank **330** against the bar member **319** to form a head **332** as shown in FIG. 17, the bushing **316** and the holder **316'** become the integral element **315**. Many means can be provided to form the holder **316'**. The rivet and two bar members can be fastened together to provide a free rotation of the bushing on the rivet as a bearing surface.

A retainer **333** has an internal surface **334** in bearing contact with the external surface **313** of the hollow ball **311**, a plane bearing surface **335**, which is in bearing contact with the flat surface **326** of the bar member **318**, and an aperture **336**, which will not touch the sleeve portion **321** of the bushing **316**. The internal surface **334** can be in a conical shape.

An elastic sleeve **337** generally similar to the sleeve **332** is provided for sealing of bearing surfaces and/or preventing vibration noises. This elastic sleeve is preferred in a hollow cylindrical shape before assembling and is stretched and wrapped over the retainer **333** and the hollow ball **311**.

In order to form a completely sealed ball joint in addition to provide a space for reserving a lubricant and/or to prevent vibration noises, a bellow or cover **338** of an elastic material is provided and has a surface **339** in contact with the surface **312'** of the ball member **310** and a ring **340** fitted on the extension **323** and in contact with the surface **328** of the element. This bellow is shaped and compressed to engage the respective surfaces and to allow the relative movements between the ball member and the element.

The rest portions of the ball member **310** and the element **315** can be made in any shape to suit any particular requirements. FIGS. 17 and 18 show the ball member **310** having two legs **341** and **342** with holes **343** and **344** respectively, which are in line. The bar members **318** and **319** have bent legs **345** and **346** respectively with holes **347** and **348** in line after assembling. Any further connections can be made to these holes **343**, **344**, **347** and **348** at both ends of the ball joint.

In this construction, the element **315** can tilt through a limited range and rotate through a complete circle or any part of it in the ball member **310** and the retainer **333** has a free floating movement.

From the above description and the showing of the drawing, my invention related to linkage joints provides a limited tilt and a rotation in a complete circle of 360 degrees or any part of it.

It will be understood, of course, that various details of construction may be varied through a wide range without departing from the principles of this invention.

I claim:

1. A linkage joint for tilting and rotation comprising a sheet metal linkage member including a bowl-shaped portion with a hole at the bottom of the bowl, the bowl-shaped portion having interior and exterior segmental spherical bearing surfaces, the bowl-shaped portion being open opposite the hole at its bottom, a ring-like retainer having an interior bearing surface in bearing contact with the exterior surface of the bowl-shaped portion of the linkage member and also having an annular exterior bearing surface, and a stud member including an outer head having a bottom surface engaging the exterior bearing surface of the retainer and a shank secured to the head and extending with a substantial clearance all around through the bottom hole in the bowl-shaped portion of the linkage member and extending with substantial clearance all around through the hole in the retainer. The shank having a neck portion forming a shoulder, the stud having an inner head with an exterior bearing surface which bears against the interior bearing surface of the bowl-shaped portion, and the diameter of said interior segmental spherical portion being larger than the diameter of the inner head exterior bearing surface so as to provide a bearing clearance therebetween, the upper head being rotatable with respect to the retainer and one of the surfaces of contact between the retainer and the upper head being substantially flat.

2. A linkage joint as claimed in claim **1**, in which the upper head is rotatable and movable laterally with respect to the retainer.

References Cited

UNITED STATES PATENTS

320,453	6/1885	Bassett	287—21 XR
531,264	12/1894	Kennedy	287—21 XR
1,909,526	5/1933	Falge et al.	287—12 XR
2,648,256	8/1953	Budreck.	

CARL W. TOMLIN, *Primary Examiner.*

A. V. KUNDRAT, *Assistant Examiner.*