April 2, 1957 H. C. DOOLING 2,787,718

MAGNETIC HAMMERS

Filed May 13, 1954

Fig. 1

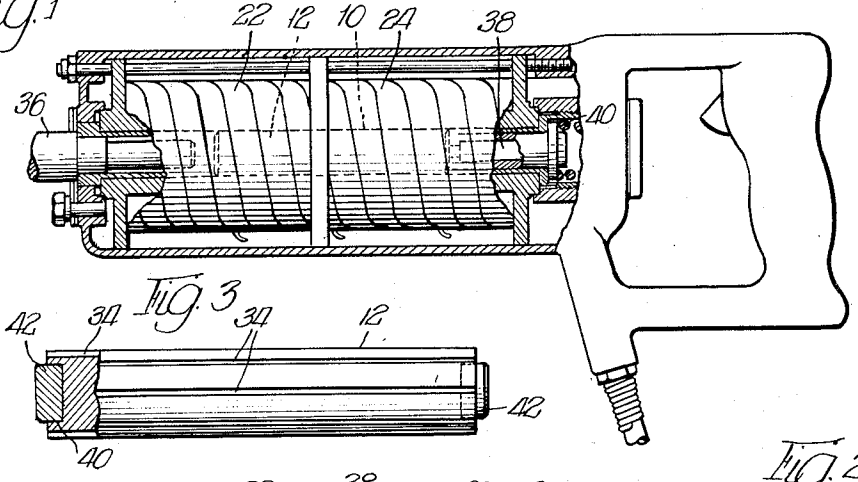

Fig. 3

Fig. 2

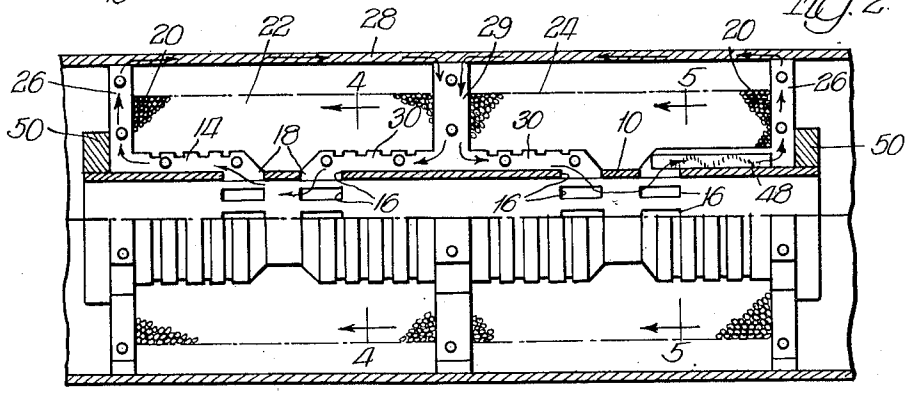

Fig. 4

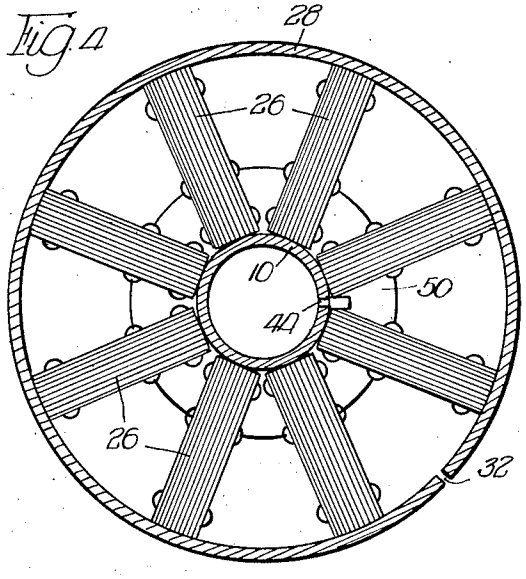

Fig. 5

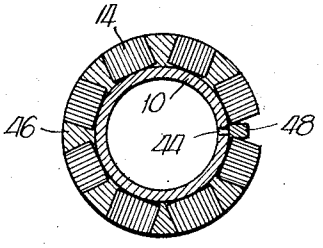

INVENTOR.

Henri C. Dooling

United States Patent Office 2,787,718 Patented Apr. 2, 1957

2,787,718

MAGNETIC HAMMERS

Henri C. Dooling, Evanston, Ill., assignor to Skil Corporation, Chicago, Ill., a corporation of Delaware

Application May 13, 1954, Serial No. 429,655

2 Claims. (Cl. 310—30)

The present invention relates to improvements in magnetic hammers and more particularly to magnetic hammers of the portable type which are held in the hand during operation.

Portable electric magnetic hammers have been in existence for a number of years and have performed well with very little maintenance since there are exceedingly few moving parts and these are not easily injured from the vibration and shock which is inherent in any hammer of this kind. Among the problems involved in a hammer of this nature is the heating of the parts and extra wattage required to operate the hammer.

It has been found that the heating of a hammer is caused not so much by the friction of the piston hammer sliding within the hammer barrel as by unwanted eddy currents which flow circumferentially around the barrel and the piston hammer itself. In breaking up these eddy currents, the heat losses are substantially reduced and less wattage is required. It has also been found that by breaking up these eddy currents, the outer shell of the hammer may be made from ordinary cold roll steel or even steel pipe instead of the much more expensive and more difficult to machine silica steels which have heretofore been thought necessary to reduce the temperature of the outer casing which is frequently held in the hand during the operation of the machine.

One of the objects of the present invention is to provide a portable electric magnetic hammer that may be conveniently and safely held in the hands of the operator with comfort.

Another object of the invention is to provide a portable electric hammer that is cheaper and easier to manufacture.

A further object of the invention is to reduce the heating of the various parts of the hammer and wattage requirements to operate the hammer.

Various other objects of this invention will be pointed out hereinafter with reference to the drawings wherein an exemplification of one embodiment of the invention is set forth.

In the drawings:

Fig. 1 is a view in side elevation of an electric hammer partly in section to show the relationship of the various parts.

Fig. 2 is a sectional view through the core and winding section of the hammer shown in Fig. 1.

Fig. 3 is a view in side elevation of the hammer piston of the present invention with a portion broken away.

Fig. 4 is a view in section taken on the lines 4—4 of Fig. 2.

Fig. 5 is an enlarged view of a section of the barrel and laminations shown in Fig. 4.

Heretofore, it has been customary to use a hammer barrel reamed out to provide a smooth cylindrical inner surface to receive a smooth surfaced hammer piston which reciprocates therein. Tests indicated that it was not the reciprocation of the piston hammer within its barrel that caused all of the heat, but that it was caused primarily by eddy currents flowing circumferentially around the piston barrel and around the piston hammer itself.

Upon breaking up these eddy currents and reducing them, it was found that the heat losses were substantially reduced and much less wattage was required to bring about substantially the same amount of work. Further tests indicated that the slotting of the barrel and the channeling of hammer piston were not alone sufficient to break up these currents since, under the pressure of the windings around the laminations, the air gap or slot in the piston barrel was frequently closed so that the piston hammer itself was bound into place or the eddy currents again returned to raise the temperature throughout the hammer. By providing the proper air gaps and positively holding them open to reduce or destroy the eddy currents, it was found that the hammer operated at much lower temperatures and that the wattage requirements were reduced at all times. Also relative expensive materials heretofore used could be changed to simple steel pipe that was cheaper, more available and much more easily machined.

With reference to the drawings, especially Figs. 1 and 2, it will be noted that there is a piston barrel 10 which is reamed out to provide a cylinder for a piston hammer 12 which reciprocates therein under alternating magnetic attraction. Groups of laminations 14 are spaced circumferentially around the barrel 10 at its ends which is slotted as at 16 to receive the inwardly turned ends 18 of the laminations which extend through the barrel 10 and are in sliding contact with the hammer 12 during its travel therein. Centrally, groups of double laminations 30 are similarly mounted. Insulated wire 20 is wound around and over these laminations and the barrel 10 to build up generally designated cores 22 and 24 respectively which alternate in their magnetic properties to reciprocate the hammer 12 in its barrel 10. The legs 26 of the laminations 14 and legs 29 of laminations 30 extend outwardly beyond the windings formed by the wires 20 and are in contact with the outer shell 28 which is drawn up tightly to these lamination legs 26 so that an electrical path is formed through the barrel casing 10, the laminations 14, up the legs 26 to the shell 28 and down the upstanding legs 29 of the center laminations 30.

The outer shell 28 has an air gap 32 (Fig. 4) which acts not only to reduce any eddy currents that might be flowing therearound, but also is of sufficient size to permit the shell to be drawn up tightly around the ends of the legs 26 and 29 of the laminations for a good electrical contact.

In Fig. 3 it will be noted that the body of the hammer piston 12 is slotted or channelled longitudinally thereof with spaced parallel channels 34 which apparently act to reduce eddy currents flowing around the surface of the hammer piston or they may permit the flow of electromagnetic forces to penetrate more deeply into the body of the piston hammer, thus affording a much greater path for the flow of these forces. Regardless of theory, the heating of the parts is substantially reduced by providing these channels 34 in the surface of the hammer piston 12.

It was further found that while the slotting of the surface of the piston hammer itself helped to reduce the heating of the hammer parts that there was a much more effective reduction of this undesirable heating by slotting the piston barrel 10 longitudinally thereof as by the air gap 44 (Figs. 4, 5). The slotting of the barrel 10 and of the surface of the hammer 12 was found to give a substantial reduction in heating of the hammer parts, but in operation it was found that the winding of

the wires 20 around the laminations and barrel caused this gap 44 to tend to close permitting the barrel 10 to clamp itself to the piston hammer 12, preventing it from moving or causing inefficient operation.

When the laminations 14 and 30 are mounted around the barrel 10, the spaced gaps between groups of laminations are filled with a brazing material 46 which brazes the laminations to the barrel 10 and to each other. Brazing material located in the space between the two groups of laminations is milled out and the air gap 44 itself is milled in the barrel and a piece of insulating material 48 is inserted therebetween instead, in a wedging relationship between the laminations or in the newly milled air gap 44 itself to positively hold this air gap 44 open against the pressure of the windings. It has been found that it is unnecessary to insert the insulating material into the air gap and for convenience it is merely wedged between two of the laminations 14 as indicated in Fig. 5 and is of a size too large to fall through the air gap into the barrel and consequently was held in place by the pressure of the windings. For this purpose the insulating material 44 may be of a fibre or other material that is relatively non-compressible. It may extend substantially the entire length of air gap 44 or several separate pieces of material may be spaced along the barrel.

A "Stellite" material was formerly deposited on either end of the hammer piston by a welding process to make hardened tip portions which could withstand wear in the pounding of the hammer piston on the tool member 36 in operation and again in striking the shock absorbing apparatus in the rear of barrel 10 which is shown as comprising the shock absorber 38 with its spring mounting 40 of any usual type. In operation it was found that different degrees of operating efficiency were present in the machine depending upon which end of the piston hammer was inserted in the hammer and that operations would vary greatly from hammer to hammer. It was found that in welding the "Stellite" to the end of the hammer that some of the steel of the hammer body was becoming intermixed with the "Stellite," which is not magnetic, so that the various ends of the piston hammers would vary greatly in their magnetic properties not only from end to end of each hammer, but, from hammer to hammer. To overcome this, a recess 40 is provided in the end of each piston hammer and a button 42 of "Stellite" is inserted therein so that a predetermined portion of it extends outwardly from the hammer end to provide a hard shock withstanding surface. A quick electromagnetic heat treatment of these end portions welds this "Stellite" button strongly in its recess 40 without destroying any of the magnetic properties of the hammer piston throughout its length.

The attaching of an electric wire to a source of electric supply is not shown or described herein as it is well-known in the art and forms no part of the invention. Modifications of the invention as shown and described will be apparent to those skilled in the art without departing from the spirit or scope of the present invention.

I claim:

1. The combination with an electric magnetic portable hammer having a piston barrel, a hammer piston reciprocally mounted therein, laminations mounted around said barrel, suitable windings and an outer shell enclosing the same and operable to reciprocate said piston under electromagnetic force, of means for reducing eddy currents in a direction circumferentially of said barrel, including said laminations comprising a plurality of groups of laminations mounted radially around said barrel and circumferentially spaced from each other, said barrel having an air gap extending longitudinally the entire length thereof between two spaced groups of laminations and a relatively non-compressible insulating material mounted between said two spaced groups of laminations adjacent said air gap for positively preventing the closing of said gap from pressure of said windings.

2. The combination with an electric magnetic portable hammer having a piston barrel, a hammer piston reciprocally mounted therein, laminations mounted around said barrel, suitable windings and an outer shell enclosing the same and operable to reciprocate said piston under electromagnetic force, of means for reducing eddy currents in a direction circumferentially of said barrel, including said laminations comprising a plurality of groups of laminations mounted radially around said barrel and circumferentially spaced from each other, brazing material between all but two of said groups of laminations binding the same to said barrel and to each other, an air gap extending longitudinally the entire length of said barrel in the space between the groups of laminations lacking in brazing material, and insulating material mounted adjacent said air gap to positively prevent the closing of said gap under pressure from said windings.

References Cited in the file of this patent

UNITED STATES PATENTS

773,124	Christmas	Oct. 25, 1904
1,518,273	Paulero	Dec. 9, 1924
1,651,306	Weyandt	Nov. 29, 1927
1,723,607	Dominguez	Aug. 6, 1929
1,819,140	Weyandt	Aug. 18, 1931