US 20080146384A1

(19) United States

(12) Patent Application Publication

Hansen et al.

(10) Pub. No.: US 2008/0146384 A1

(43) Pub. Date: Jun. 19, 2008

(54) SWING SPEED SPORT CONDITIONING AID

(76) Inventors: **Sidney A. Hansen**, Beaverton, MI (US); **Chad P. Hansen**, Grand Rapids, MI (US)

Correspondence Address:
MCKELLAR IP LAW, PLLC
784 SOUTH POSEYVILLE ROAD
MIDLAND, MI 48640

(21) Appl. No.: **12/002,194**

(22) Filed: **Dec. 14, 2007**

Related U.S. Application Data

(60) Provisional application No. 60/875,017, filed on Dec. 15, 2006.

Publication Classification

(51) **Int. Cl.**
A63B 69/36 (2006.01)
A63B 69/38 (2006.01)

(52) **U.S. Cl.** **473/437**

(57) **ABSTRACT**

A sport conditioning aid in the form of a viscoelastic plastic weight that grips onto a swingable sport object for example in the game of golf and tennis. The grip-on action for attachment is achieved by selecting the material characteristics of the plastic. The purpose of the sport conditioning aid is to increase the player's swing speed in hitting a sport object such as a ball. The swing speed weight can be used in sport specific training programs with varying incremental weight weights. The swing speed weight specifically conditions the fast twitch muscles and quickens the neural responses over a training period of several weeks.

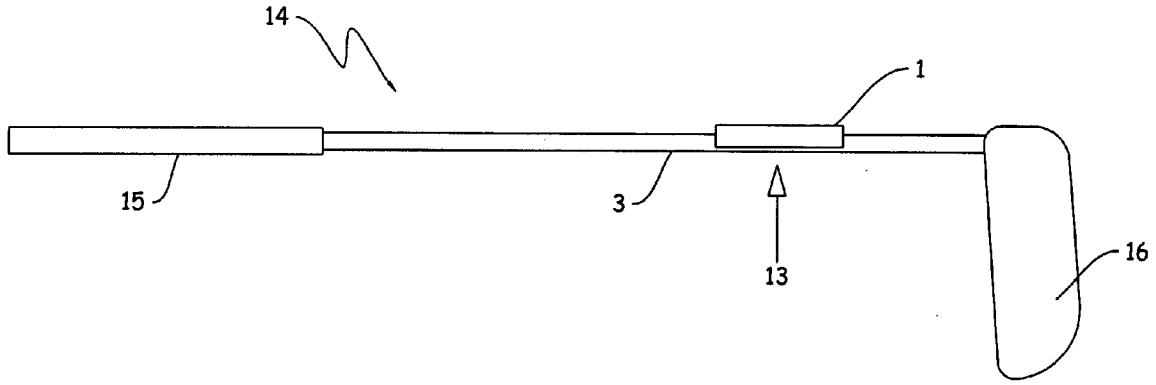

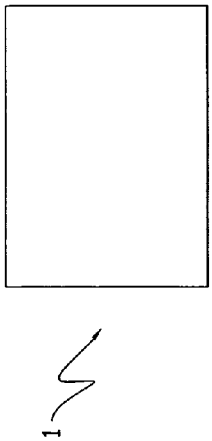

FIG 1a

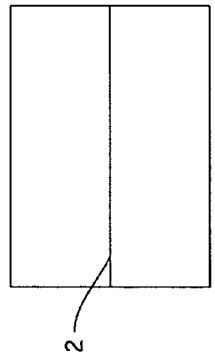

FIG 1b

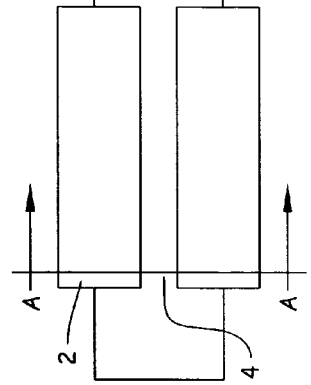

FIG 1c

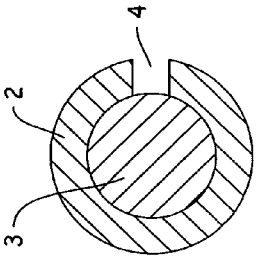

FIG 1d

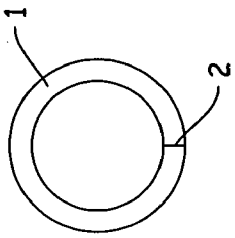

FIG 2b

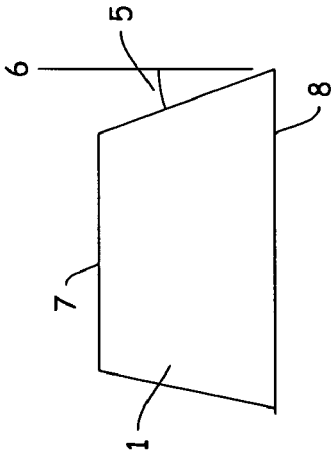

FIG 2a

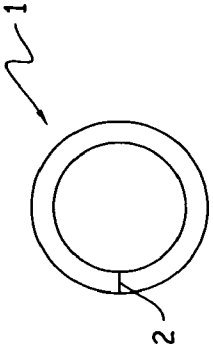

FIG 2d

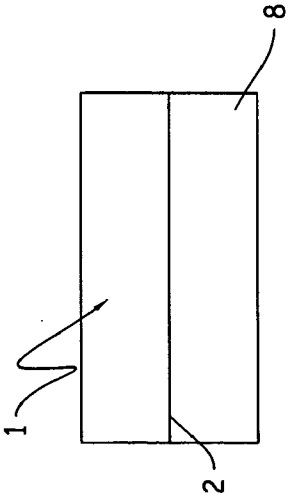

FIG 2c

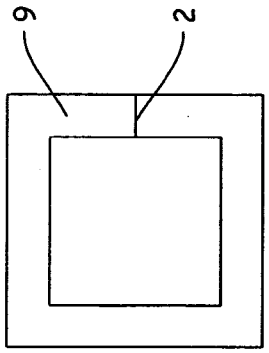

FIG 3a

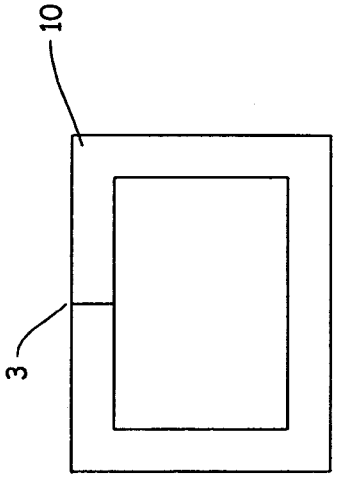

FIG 3b

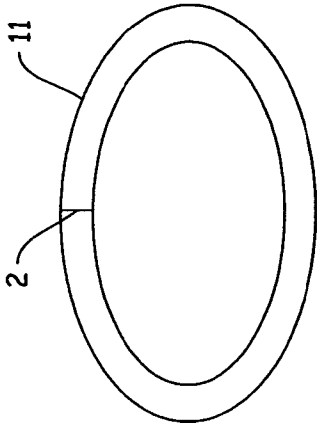

FIG 3c

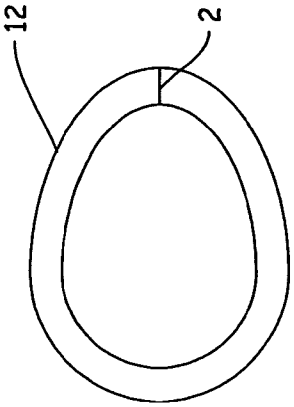

FIG 3d

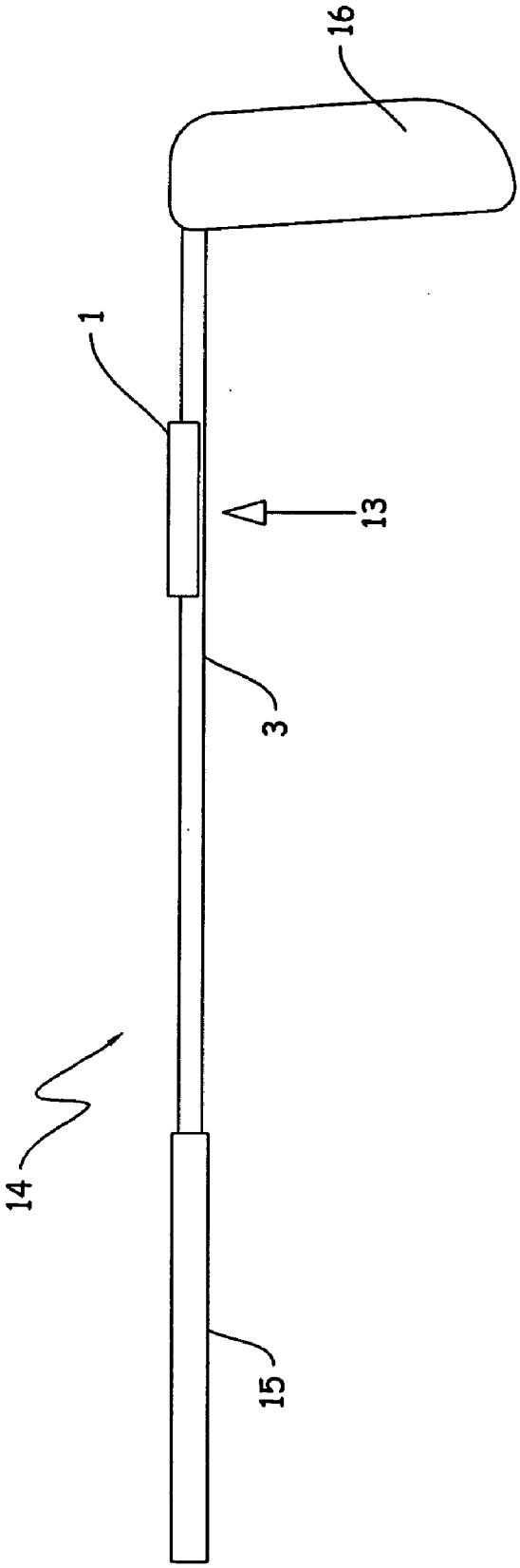

FIG 4

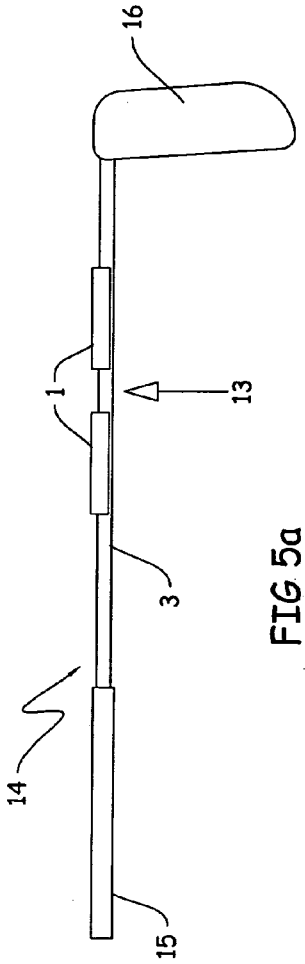

FIG 5a

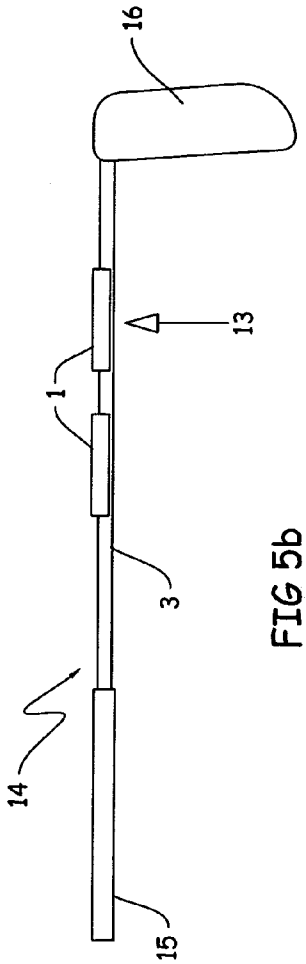

FIG 5b

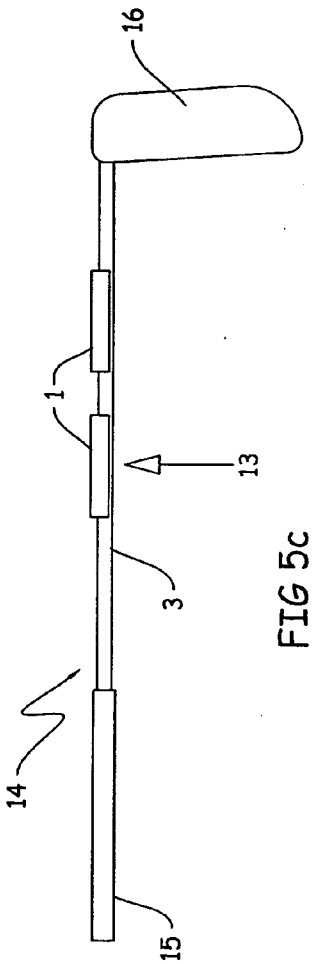

FIG 5c

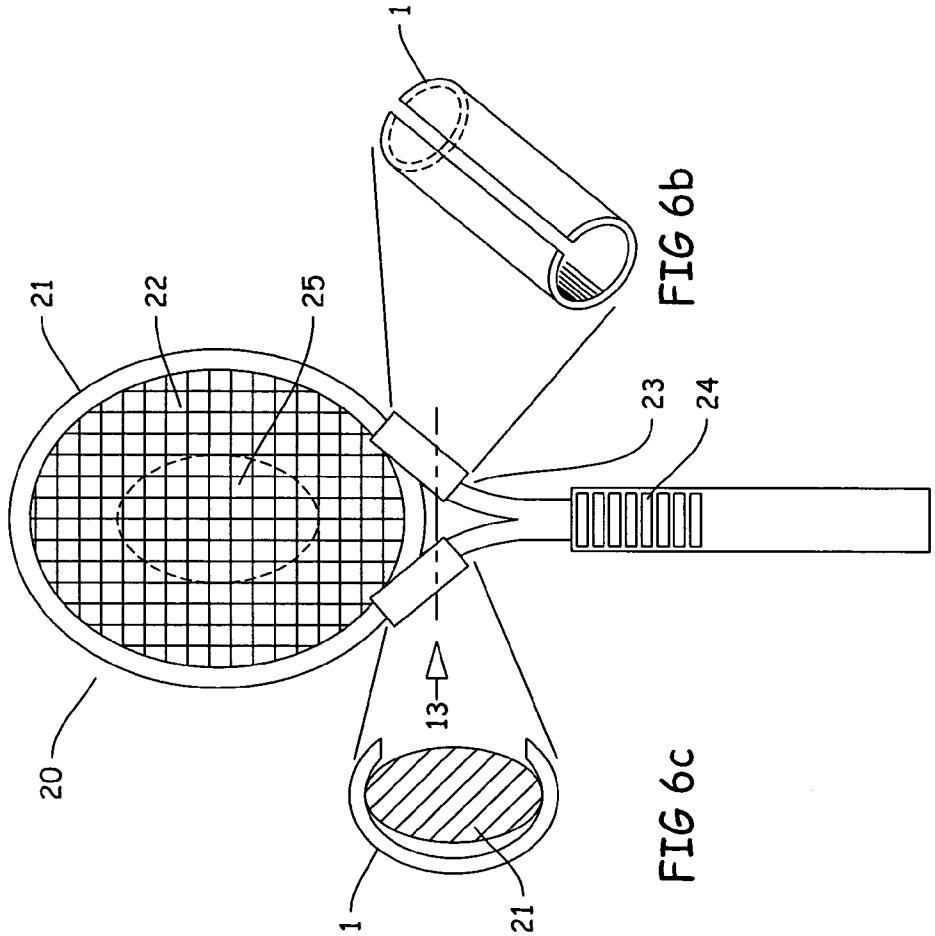

FIG 6a

FIG 6b

FIG 6c

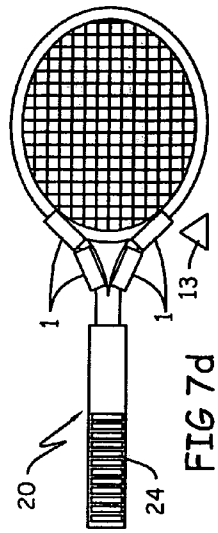

FIG 7d

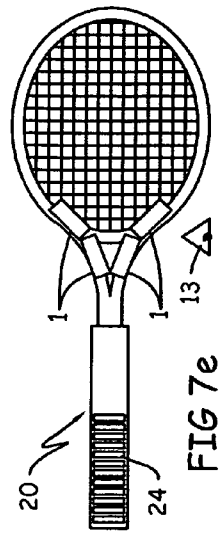

FIG 7e

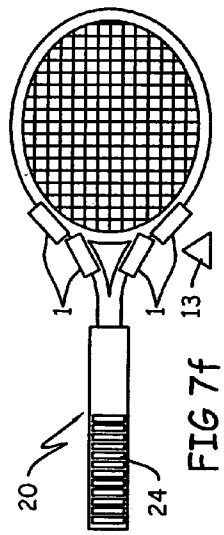

FIG 7f

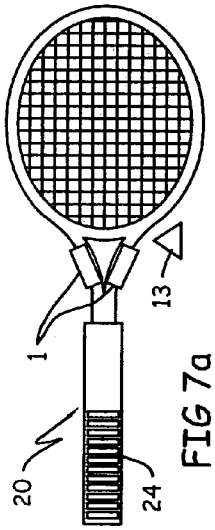

FIG 7a

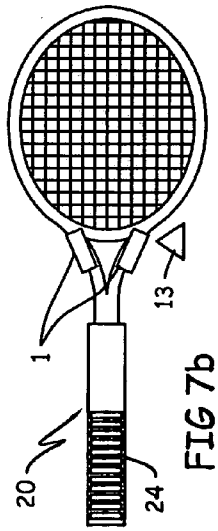

FIG 7b

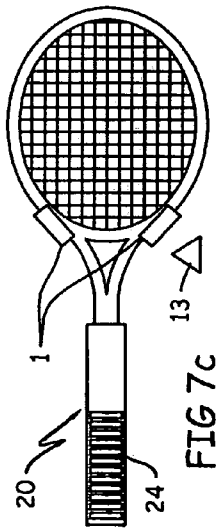

FIG 7c

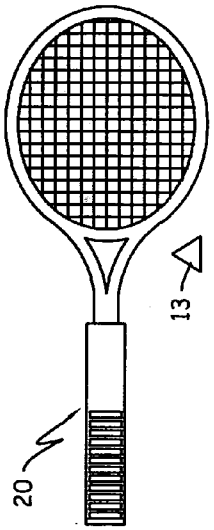

FIG 7g

SWING SPEED SPORT CONDITIONING AID

[0001] This application claims priority from U.S. Provisional Patent Application No. 60/875,017 filed Dec. 15, 2006.

[0002] The invention disclosed and claimed herein deals with a novel swing speed sport conditioning aid in the form of a viscoelastic plastic weight that self grips onto a swingable sport object, for example, a baseball ball, softball bat or a golf club.

[0003] The invention also deals with a combination of the sport conditioning aid and a swingable sports object and, in addition, this invention deals with methods of use for sports training using the combination of the swingable sports object and the sport conditioning aid.

[0004] The objective in using the sport conditioning aid is to increase a player's swing speed using the swingable sport object. The swing speed weight is used in sport-specific training programs with varying incremental weight amounts. The swing speed weight specifically conditions the fast twitch muscles and quickens the neural responses during a training period of several days to several weeks.

BACKGROUND OF THE INVENTION

[0005] In many sports, the swing speed of a swingable sport object in hitting a game object (ball or puck) is fundamental to a player's performance. Utilizing weighted conditioning aids is a general training approach to improve a player's competitive edge by increasing swing speed and strength. Many weight types and training methods utilize sport conditioning aids.

[0006] Prior art patents describe numerous sports conditioning aids or training devices to improve swing performance in the sport of golf, for example.

[0007] In U.S. Pat. No. 5,178,394, there is described a weight that is mechanically clamped to the golf shaft in various locations along the shaft including the center of mass of the club. The weight is mounted perpendicular to the golf shaft to counter balance the club head weight. The weight is meant to affect the feel of the golf club rather than to be used as a swing speed weight training aid.

[0008] U.S. Pat. No. 5,460,378 describes weights attached to the shaft of a golf putter. The weights are adjustable along the shaft, including the center of mass location. The weights are meant to adjust the feel of the putter to changing golf green conditions such as wet/dry or slow/fast. The weights are intended for actual game use. The metal weight as shown in the patent appears to be in excess of several ounces. No weight range is disclosed.

[0009] U.S. Pat. No. 6,186,904 describes a sectioned golf shaft that has a threaded screw attachment for various weights in 3 ounce increments ranging from 15 ounces to several pounds. The weight can be added at the center of mass of the golf shaft or at the end of the golf club shaft by replacing the club end. The weighted golf club is a swing speed training aid and not meant to be used in hitting actual golf balls.

[0010] U.S. Pat. No. 6,612,936 describes a weight similar to U.S. Pat. No. 5,460,387. The weight system is meant to be a swing speed training aid and for warm up types of practices. The weight is made up of two interlocking sections and a mechanical securing means. The intent is to increase the golf club weight during practice in order to increase the swing speed in a game. The amount of the added training weight is not disclosed.

[0011] U.S. Pat. No. 6,855,067 describes weights added to a golf club head affecting the center of mass of the club head rather than at the center of mass on the shaft. The weight adjustments are to affect the flight of a hit golf ball off the club head face as described in U.S. Pat. No. 4,869,507

[0012] The prior art also describes numerous sport conditioning aids or training devices to improve swing performance in the sport of tennis. For example, U.S. Pat. No. 4,000,893 describes a flexible material wrap with pockets for cylindrical weights that are attached to the handle area with Velcro® between the tennis racquet handle and the racquet face. This location is in the area of the center of mass or the balance point of the tennis racquet. The weight location and amounts disclosed in the patent appear adjustable as a training aid to build up the player's muscles. The flexible wrap holder can be used in practice play. The weight amounts are not provided.

[0013] U.S. Pat. No. 4,538,812 describes an elastic member attached by Velcro® with chambers for weights very similar to U.S. Pat. No. 4,000,893. The chambers can be filled with solid metal or granular weights. The weight amounts are not disclosed.

[0014] U.S. Pat. No. 5,039,097 describes snap-on weights that can be attached around the sweet spot of the tennis racquet face between the strings along the inside frame edge. The elastic plastic or rubber-like material for the weights are attached near the frame edge between the strings by wedging between two adjacent strings. The weights are meant to be swing speed training aids, plus improve the players wing by slight balance changes on the racquet face. The number and location of the weights can be adjusted around the sweet spot of the racquet face. The amount of the weight is not given in this patent. The patent Figures suggest the weight elements may be in fractional ounce amounts.

[0015] Finally, U.S. Pat. No. 5,501,451 describes an attachment bag for aerodynamic drag onto a tennis racquet centered on the racquet face or sweet spot. The bag attachment is a warm up device and is not meant for actually hitting of tennis balls. The bag is light weight canvas fabric and can be adjusted for more or less drag on the racquet.

THE INVENTION

[0016] Thus, what is disclosed and claimed herein is a sport conditioning aid comprising a plastic weight with self-gripping attachability to a swingable sport object such that a user, with training using the sport conditioning aid, can increase swing speed of the swingable sport object and increase personal strength.

[0017] Another embodiment of this invention is a sport conditioning aid as set forth just Supra, in combination with a swingable sport object wherein the swingable sport object is selected from the group consisting of (i) golf clubs, (ii) tennis racquets, (iii) racquet ball racquets, (iv) baseball bats, (v) softball bats, (vi) ice hockey sticks, (vii) field hockey sticks, (viii) cricket bats, and (ix) lacrosse bats.

[0018] A further embodiment of this invention is a method of sports training using the combination as set forth just Supra wherein the swingable sport object hits a sport object and a

method of sports training using the combination as set forth just Supra wherein the swingable sport object is used without hitting a sport object.

BRIEF DESCRIPTION OF THE DRAWINGS

[0019] FIG. **1***a* is full side view of a swing speed weight of this invention.

[0020] FIG. **1***b* is a full side view of the swing speed weight of FIG. **1***a* showing a slit through the wall thereof.

[0021] FIG. **1***c* is a full side view of the swing speed weight of FIG. **1***b* showing a portion of a swingable sports object shaft and the gap created by forcing the swingable sports object shaft inside the swing speed weight.

[0022] FIG. **1***d* is a cross sectional view of the device of FIG. **1***c* through the line A-A.

[0023] FIG. **2***a* is a full side view of a device of this invention showing the ends cut on an angle.

[0024] FIG. **2***b* is a full end view of the device of FIG. **2***a*.

[0025] FIG. **2***c* is an full end view is a full bottom view of the device of FIG. **2***a*.

[0026] FIG. **2***d* is a full end view of the device as shown in FIG. **2***c*.

[0027] FIG. **3***a* is a full end view of a square speed weight of this invention.

[0028] FIG. **3***b* is a full end view of a rectangular speed weight of this invention.

[0029] FIG. **3***c* is a full end view of an elliptical speed weight of this invention.

[0030] FIG. **3***d* is a full end view of a combination circular/elliptical speed weight of this invention.

[0031] FIG. **4** is an illustration of a golf club with a device of this invention located at the center of mass of the golf club.

[0032] FIG. **5***a* is an illustration of a golf club with a pair of devices of this invention located at the center of mass of the golf club.

[0033] FIG. **5***b* is an illustration of a golf club with a pair of devices of this invention located between the handle and the golf club.

[0034] FIG. **5***c* is an illustration of a golf club with a pair of devices of this invention located between the center of mass and the club head.

[0035] FIG. **6***a* is a full front view of a modern tennis racquet.

[0036] FIG. **6***b* is a full bottom view of a swing speed weight of this invention.

[0037] FIG. **6***c* is a partial cross sectional view of the device of FIG. **6***b*.

[0038] FIGS. **7**A through **7**F show illustrations of the tennis racquet of FIG. **7**G with swing speed weights placed at various locations thereon.

[0039] FIG. **7**G is a full front view of a standard modern tennis racquet.

DETAILED DESCRIPTION OF THE INVENTION

[0040] The speed weight training weights of this invention are composed of plastic materials, for example, flexible viscoelastic plastics. Especially preferred is a composite plastic material, for example, a class of thermosetting plastics called polyvinyl chloride (PVC) polymer. The polyvinyl chloride polymer is a well studied commercial plastic. This plastic has been formulated into basic plastic types and tailored in composite combinations to achieve enhanced material properties. The device in this invention takes advantage of the diversity of PVC plastic behaviors.

[0041] Plastics have "perfect memory", "no memory" or "fading memory". The viscoelastic plastic has the capability to absorb impact shock by hysteresis heat loss, for example from a golf club hitting a ball. The material properties of plastic are described in more detail to achieve unique device capabilities not known in the prior art. The claimed result is a functionally efficient (simple) device for sport training.

[0042] All plastics are classified as either thermosetting or thermoplastic. Thermosetting materials can only be melted once. Thermoplastics can be melted multiple times. Plastics have three basic behavior types: 1) elastic plastics, 2) viscous plastics, and 3) viscoelastic plastics.

[0043] The first type, elastic plastics, can be thought of as having "perfect memory". If elastic plastics are deformed through the action of a force, they return to their original shape when the force is removed. This happens when a rubber ball bounces. The ball is deformed as it hits a hard surface but the rubber remembers its undeformed spherical shape. Rapid recovery of the shape causes the ball to bounce back.

[0044] The second type, viscous (molten) plastics, by contrast, have "no memory". When a force is removed, they retain their condition at the time the force is removed (or continue moving as the result of inertia). When a viscous plastic is dropped onto a hard surface, it deforms and does not bounce.

[0045] The third type, viscoelastic plastics, are in between elastic plastics and viscous plastics having "fading memory". If a force is removed shortly after it is applied, they will remember their undeformed shape and return toward it. If a viscoelastic plastic is dropped onto a hard surface, it will bounce like a ball but not as high and will be deformed for a period of time until it reforms to the original shape. This recovery time is a measure of hysteresis. However, if the force is applied for a long time, it will eventually forget its undeformed shape and not return to the original shape.

[0046] A viscoelastic plastic has an elastic component and a viscous component. The viscosity of a viscoelastic plastic gives a strain rate dependent on time. A viscoelastic plastic loses energy when a load is applied, then removed. Hysteresis is observed in the stress-strain curve. Since viscosity is the resistance to plastic deformation, a viscous plastic will lose energy throughout the loading cycle. Plastic deformation results in lost energy, or the ability to absorb the shock of impact with a hard surface.

[0047] More specifically, viscoelasticity in a plastic comes from a molecular rearrangement. When a stress is applied to a viscoelastic plastic, parts of the long polymer chain change position. This movement or rearrangement is called "creep". Polymers remain a solid material even when these parts of their chains are rearranging in order to accompany the stress, and as this occurs, it creates a back stress in the material. When the back stress is the same magnitude as the applied stress, the material no longer creeps. When the original stress is taken away, the accumulated back stresses will cause the polymer to return to its original form. The material creeps, which gives the prefix visco-, and the material fully recovers, which gives the suffix -elasticity.

[0048] Developing a competitive edge is an essential part of sports. The competitive nature of sports drives players in seeking ways to gain this advantage through training methods, knowledgeable coaching, and equipment innovations.

Sport-specific training is becoming a common method to develop this competitive advantage and hence sport-specific training aids are needed. Sport-specific training programs are tailored to maximize the individual player performance capabilities for a particular sport. Speed, quickness, and agility in swinging a sport object are fundamental performance capabilities for example, baseball, tennis, and golf. However, both the player and the coach need to be assured that a sport-specific training aid will not compromise other training gains such as changing the player's swing mechanics.

[0049] A player's swing mechanics can be altered by using improper sport conditioning aids. For example, excessive weight or weight added at the wrong location on a swingable sport object can change a player's swing mechanics in a few weeks. Using improper conditioning aids in the off-season can develop flawed swing mechanics which carry through into the up-coming season and dramatically effect player performance.

[0050] Today, a typical tennis racquet weighs between 9 to 12 ounces and the trend is to lighter racquets. A typical golf club weighs between 10 to 20 ounces with the driver being the lightest and the putter being the heaviest. The sport-specific training aids need to adapt to many changing equipment innovations such as size, shape, and weight.

[0051] If the weighted training aids are limited to less than 20% of the swingable sport object, the danger of changing a player's swing mechanics is greatly reduced. Hence, weighted training aids should be limited to a percent of the total swingable sport object. In the case of tennis and golf, a training aid should be limited to fractional ounce increments.

[0052] The swing speed weight conditioning aid described herein has not been disclosed in the prior art. The swing speed conditioning aid described and claimed herein utilizes a viscoelastic plastic having material characteristics with conformational memory. That is, the viscoelastic plastic has a time delayed resistance to conformational change. This delayed time resistance dampens the initial shock of a ball impacting a swingable sport object.

[0053] For example, a viscoelastic plastic with memory absorbs the initial shock, thus staying in contact with the swingable sport object, and not slip or fall off. A snap-on weight made from a ringing elastic plastic without memory would respond near instantaneously to the sudden impact shock of a game object and slip or fall off. Thus, the memory properties of the viscoelastic plastic enables an effective self-gripping attachment on the swingable sport object.

[0054] One sport-specific training method called "pyramids" increases swing speed by making incremental weight increases and decreases to the player's standard swingable port object. These small changes about the standard weight thereby condition the player's fast twitch muscular and neural patterning. The result is small incremental increases in swing speed with training over several weeks. When the overload/under load condition is removed, the player's swing is tricked into the fast twitch mode. Swing speed increases of 5 to 10 percent are achievable with this type of sport-specific conditioning program. By contrast, recent studies with slow movement strength training such as weight lifting or aqua resistance bat swings for girls college softball, developed the slow twitch muscular mode. Dramatic swing speed decreases of 15 to 20 percent were found.

[0055] Valuable features of the swing speed sport conditioning aid of the instant invention include an adaptable grip onto various size and shape swingable sport objects, attachment at the center of mass of the swingable sport object, incremental weight loading, no tools for attachment of the device to the swingable sport object, and no small pieces to lose or misplace.

[0056] Turning now to the Figures, there is shown in FIGS. **1***a* to **1***d* a simplified version of a device **1** of this invention cut from a viscoelastic hollow plastic tube stock manufactured by an extrusion process, showing a linear axis line L-L.

[0057] FIG. **1***a* is a full side view of the device **1** of this invention. FIG. **1***b* is a full side view of the device of FIG. **1***a* wherein there is shown a side slit **2** that is parallel and overlies the linear axis L-L and this slit **2** is the opening through which the device **1** is mounted on the shaft **3** (FIGS. **1***c* and *d*) of a swingable sport object.

[0058] FIG. **1***c* is a full side view of the device **1** of FIG. **1***a* showing a portion of a shaft **3** and the gap **4** created by the insertion of the larger shaft **3** in the device **1**. FIG. **1***d* is a full cross sectional end view of FIG. **1***c* through line A-A.

[0059] The selection of the correct undersized tube stock creates a grip type or grip-on action onto the shaft **3**. Likewise, careful selection of the right viscoelastic plastic material minimizes slipping or movement when the shock of a hit ball is absorbed by a golf club. Examples of various viscoelastic plastic materials will be described infra.

[0060] The device of FIG. **1***a* can be cut at angles other than the 90° shown in FIG. **1***a*. Shown in FIG. **2***a* is a 90° angle designated **6**, with regard to the linear axis L-L of the hollow device **1**. For example, the cut **5** can be angled anywhere from 10 to 15 degrees from the vertical line **6** of FIG. **2***a*. This cut **5** provides a more functional hand grip for the player to adjust the location or to remove the swing speed weight **1** from the swingable sport object **3**.

[0061] The angle cut **5** is made relevant to the location of the slit **2** as can be noted from FIG. **2***c*, which is a full bottom view of the device **1** shown in FIG. **2***a*. FIG. **2***b* shows the slit **2** at the bottom **8**, or the long side of the angle cut of the device **1** of FIG. **2***a* wherein the slit **2** is opposite the top **7** of device **1** and is located such that the widest angle is at the top **7** of the device **1**.

[0062] The device **1** of this invention can be manufactured in other extruded shapes beside that shown in FIGS. **1** and **2**, to fit specific sport equipment dimensions. For example, as shown in FIG. **3***a*, a hockey stick would need a square cross section **9** at the center of mass location and the configuration shown as **9** would accommodate that need. Also shown are a rectangular configuration **10** in FIG. **3***b*, an ellipse **11** shown in FIG. **3***c*, and a circle/ellipse **12** shown in FIG. **3***d*.

[0063] The location of the center of mass or balance point on a swingable sports object is what provides the "feel" to the player. Two golf clubs of the same weight and length would have a different feel if the weight was distributed differently and changed the center of mass. FIG. **4** shows an illustration of the center of mass concept on a golf club wherein **13** is the center of mass and the golf club is **14**. Also shown is a swing speed weight **1** of this invention. The center of mass **13** is between the handle **15** and the clubface **16** along the shaft **3**. A swing speed weight **1** increment for golf would be around ½ ounce which is roughly 5% of the total weight of the golf club **14**.

[0064] As indicated earlier, the location of the speed weight device **1** on the swingable sports object is critical to a constructive training program. FIGS. **5***a* to **5***c* show the concept of the placement of the speed weight devices **1** on a golf club **14**. FIG. **5***a* shows the placement of two swing speed weights

1 at the center of mass **3** of the club **14**. FIG. **5***b* shows using two weights between the handle grip **15** and the center of mass **13**. FIG. **5***c* illustrates using two weights between the center of mass **13** and the club face **16**. A training program can be designed around these three locations adjusting the number of weights to maximize the training gains for players grouped by age, gender, and abilities.

[0065] FIGS. **6***a* to **6***c* show the mounting of speed weight devices on a modern tennis racquet **20**. The tennis racquet **20** has a frame face **21**, strings **22**, a neck **23**, and the handle grip **24**. The sweet spot is illustrated by a dotted ellipse **25** on the strings **22** in FIG. **6***a*. A tennis racquet **21** has a cross section profile that is typically elliptical rather than round as for a golf shaft **3**. A partial expanded cross sectional view in FIG. **6***c* illustrates the open swing speed weight **1** on the elliptical neck area **23** at the center of mass **13** location. The inside diameter of swing speed weight **1** for tennis is larger than for a swing speed weight **1** for a golf club. A typical speed weight increment for a tennis racquet swing speed weight **1** would be around ¼ ounce and when used in pairs the total weight is about ½ ounce. This is roughly 5% of the total tennis racquet weight.

[0066] The swing speed weight is recommended to be used in training programs designed to maximize swing speed gains. Shown in FIGS. **7**A to **7**G are a standard modern tennis racquet **20** (FIG. **7**G) shown the center of mass **13**. Then, for comparison purposes, there is shown three locations that are recommended for tennis swing speed weights **1** using up to two pairs (four) of ¼ ounce increment weights. Note the locations are all relative to the center of mass **13** of the tennis racquet **20**. For example, locations in Figure A and D are before the center of mass **13** and locations, FIGS. **7**B and **7**E locations are at the center of mass **13** and Figures C and **7**F are beyond the center of mass **13**, all relative to the handle **24**.

[0067] Selection of the viscoelastic plastic materials for the swing speed weight **1** is critical. The material must provide a measure of tack or stick to prevent sliding on the swingable sport objects, relatively moderate flexibility, a measure of memory or time-delayed resistance to deformation changes, and ling term grip retention on the sporting equipment.

[0068] Following are some examples of a viscoelastic plastic material for use in golf applications. Some samples failed one or more of the fur key material property needs above. For example, initially successful testing results were followed by failure in longer term grip testing.

EXAMPLE 1

[0069] A ⅜ inch inside diameter (ID)×⅝ inch outside diameter (OD) clear fiberglass braided PVC tubing manufactured by Anderson Barrows was tested. A ½ ounce increment grip-on weight is approximately 3½ inches long. The braided PVC tubing material upon being slit for the grip-on weight had an initial gap of roughly 60 mils apparently from the internal stress of the reinforcing fiber. Initial testing of the braided PVC tubing on a golf club in hitting actual golf balls successfully stayed in place without slipping and did not fall off. However, longer term testing when the braided PVC tubing was left on the club shaft more than one day experience some movement on the club shaft and fell off approximately 50% of the time when hitting actual golf balls.

EXAMPLE 2

[0070] A 5/16 inch ID×⅝ inch OD clear PVC plastic formulation Tygon® B-44-4X manufactured by Saint Gobain performed better than example 1, but again failed in the long term testing when left on the club shaft for more than one day.

EXAMPLE 3

[0071] A ¼ inch ID×⅝ inch OD clear PVC plastic formulation Tygon R-3603 performed better than either example 1 or 2. Long term testing leaving the weights on the golf shaft over one week perform successfully in hitting actual golf balls with no movement on the shaft and without falling off. Tygon R-3603 would be one preferred material of choice for the golf wing speed weights of this invention.

[0072] Following are some examples of a viscoelastic plastic material for use in tennis applications. Again, some samples failed one or more of the four key material property requirements set forth above. Some examples were initially successful but failed in longer term grip testing.

EXAMPLE 4

[0073] A ½ inch ID×¾ inch OD clear fiberglass braided PVC tubing manufactured by Anderson Barrows was tested. A ¼ ounce increment grip-on weight is approximately 1½ inches long. The braided PVC tubing material upon being slit for the grip-on weight had an initial gap of roughly 60 mils from the internal stress of the reinforcing fiber. Initial testing of the braided PVC tubing on a tennis racquet when hitting actual tennis balls successfully stayed in place without slipping and did not fall off. However, testing with weights left on the racquet more than one day had some movement and fell off approximately 50% of the time. These results were very similar to those found with example 1 in the golf application.

EXAMPLE 5

[0074] A ½ inch ID×13/16 inch OD clear PVC tubing Tygon B-44-4X by Saint Gobain had test performance better than Example 4. Long term testing by leaving the grip-on weight on the tennis racquet over one week performed successfully in hitting actual tennis balls with no movement on the racquet and without falling off. Tygon B-44-4X would be one preferred materials of choice for the tennis swing speed weight.

[0075] Testing a ½ inch ID×¾ inch OD silicone tubing manufactured by Saint Gobain failed in all test trials. The silicone plastic tubing had a quick snap (a ringing plastic) with no measurable memory. While the tack of the silicone material to the tennis racquet was excellent, upon hitting an actual tennis ball, the snap-on weight readily cane off. The lack of memory characteristic in the silicone material would not allow the absorption of the instantaneous shock of hitting an actual tennis ball.

[0076] Thus, this invention deals with a viscoelastic plastic weight with memory that absorbs the shock of impact between a swingable sport object and an actual sport object, wherein the viscoelastic plastic is selected from a variety of plastics providing sufficient tackiness and stiffness to remain in place on the swingable sport object upon impact with an actual sport object. The plastic weights are manufactured

from a variety of plastic materials having the necessary properties and are manufactured by extrusion and injection molding processes, for example.

[0077] The plastic weight amounts are preferably less than 15% of the weight of the swingable sport object so as to not change the player's wing mechanics and the plastic weights can be added in varying increments in a sport training program to maximize the swing speed gains over several weeks.

[0078] The plastic weight is placed on the swingable sport object at or near the center of mass of the object so as not to change the feel of the swingable sport object or affect the player's swing mechanics and thus, there is a sport training benefit of increased swing speed when the plastic weight is removed which tricks the fast twitch muscle response of the user and quickens the neural firing pattern over a training period of several weeks.

What is claimed is:

1. A sport conditioning aid comprising a plastic weight with self-gripping attachability to a swingable sport object such that a user, with training using the sport conditioning aid, can increase swing speed of the swingable sport object and increase personal strength.

2. A sport conditioning aid as claimed in claim **1** wherein the plastic of the plastic weight is a viscoelastic plastic having sufficient memory to absorb the initial shock of impact between the swingable sport object and a hit sport object.

3. A sport conditioning aid as claimed in claim **2** wherein the physical properties of the viscoelastic plastic provides sufficient grip on the swingable sport object to stay attached to the swingable sport object during impact from hitting a sport object.

4. A sport conditioning aid as claimed in claim **3** wherein the viscoelastic plastic material is a homogeneous material comprised of a flexible polyvinylchloride polymer.

5. A sport conditioning aid as defined in claim **3** wherein the viscoelastic plastic material is a non-homogeneous material composed of flexible polyvinylchloride and at least one other rigid reinforcing aid comprised of a material selected from the group consisting of (i) rigid polyvinylchloride, (ii) fiberglass, (iii) carbon fiber, (iv) metal, (v) composite materials, and (vi) combinations of any of (i) to (v).

6. A sport conditioning aid as claimed in claim **1** in combination with a swingable sport object wherein the swingable sport object is selected from the group consisting of (i) golf clubs, (ii) tennis racquets, (iii) racquet ball racquets, (iv) baseball bats, (v) softball bats, (vi) ice hockey sticks, (vii) field hockey sticks, (viii) cricket bats, and (ix) lacrosse balls.

7. The combination as claimed in claim **6** wherein the swingable sport object is selected from the group consisting of golf clubs, tennis racquets, racquet ball racquets lacrosse racquets, and hockey sticks.

8. A sport conditioning aid as claimed in claim **1** wherein the weight of the plastic weight is in the range of 1 to 50% of the swingable sport object.

9. A sport conditioning aid as claimed in claim **1** wherein the weight of the plastic weight is in the range of 5 to 20% of the swingable sport object.

10. A sport conditioning aid as claimed in claim **1** wherein the weight of the plastic weight is in single or multiple weight increments.

11. A sport conditioning aid as claimed in claim **1** wherein the plastic weight has a linear axis and the ends of the plastic weight have a cut angle and the cut angle is in the range of 0 to 30 degrees from the linear axis.

12. A sport conditioning aid as claimed in claim **11** wherein the cut angle is in the range of 10 to 15 degrees from the linear axis.

13. The combination as claimed in claim **6** wherein the plastic weight is enhanced with a mechanical assembly to secure the plastic weight to the swingable sport object.

14. The combination as claimed in claim **6** wherein the swingable sport object has a sweet spot and the plastic weight is attachable at any location on the swingable sport object.

15. The combination as claimed in claim **14** wherein the location is selected from a) between a hand grip and a center of mass of the swingable sports object, b) at the center of mass of the swingable sports object, and c) between the center of mass and the sweet spot.

16. The combination as claimed in claim **16** wherein the attachment location of the plastic weight is at or near the center of mass of the swingable sport objects.

17. A sport conditioning aid as claimed in claim **1** wherein the plastic weight is manufactured by any convenient means.

18. A sport conditioning aid as claimed in claim **17** wherein the plastic weight is manufactured by cutting and shaping plastic tubular extruded stock.

19. A method of sports training using the combination of claim **6** wherein the swingable sport object hits a sport object.

20. A method of sports training using the combination of claim **6** wherein the swingable sport object is used without hitting a sport object.

* * * * *