Jan. 7, 1941. B. LOSHAK 2,227,788

WEIGHT-GRADING APPARATUS

Filed April 21, 1938 2 Sheets-Sheet 1

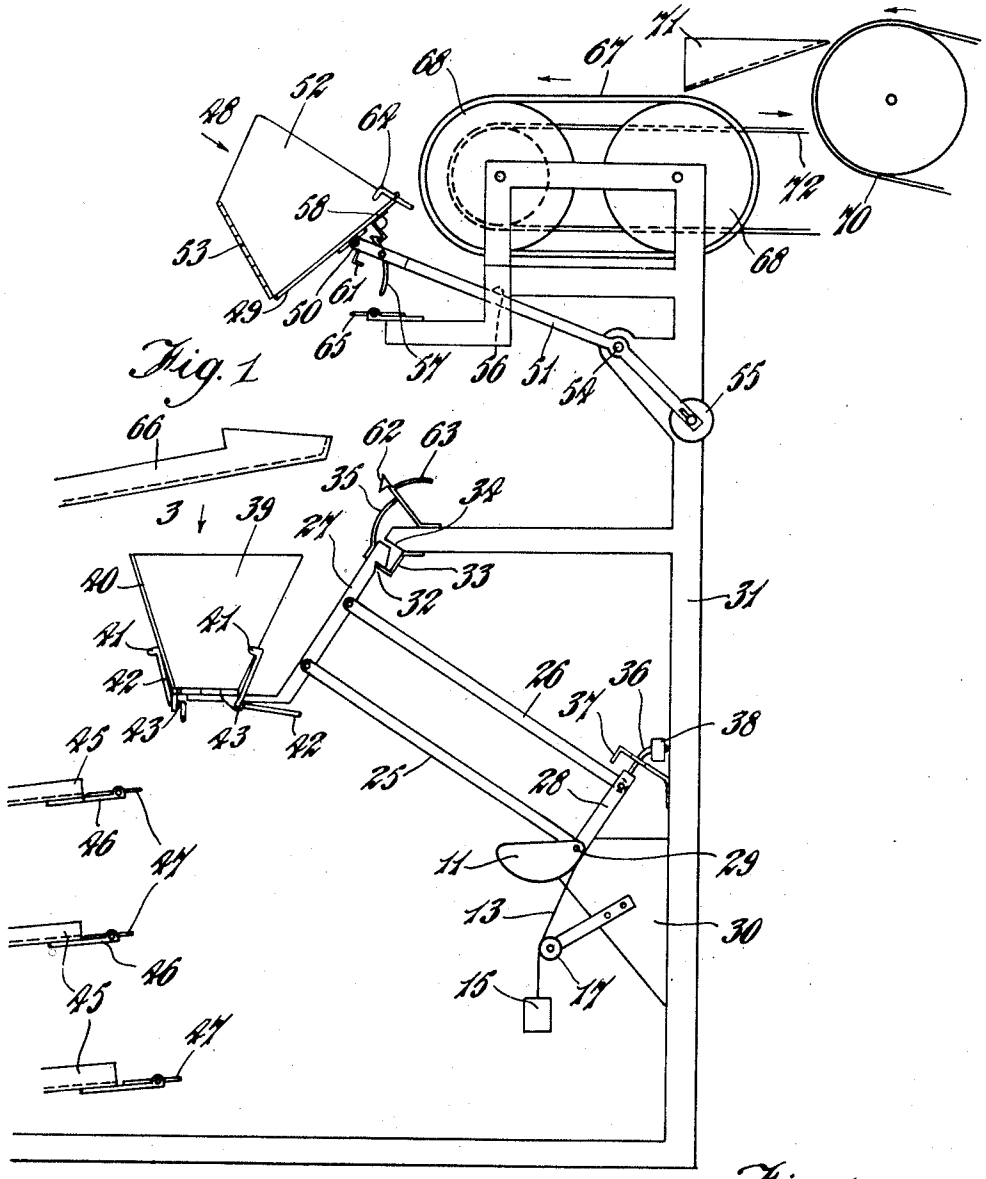


Fig. 1

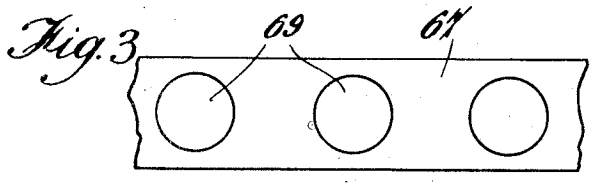


Fig. 3

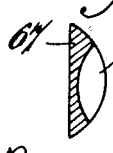


Fig. 4

Inventor,
Bernard Loshak,
by Frank S. Appleman,
attorney.

Jan. 7, 1941. B. LOSHAK 2,227,788

WEIGHT-GRADING APPARATUS

Filed April 21, 1938 2 Sheets-Sheet 2

Fig. 2.

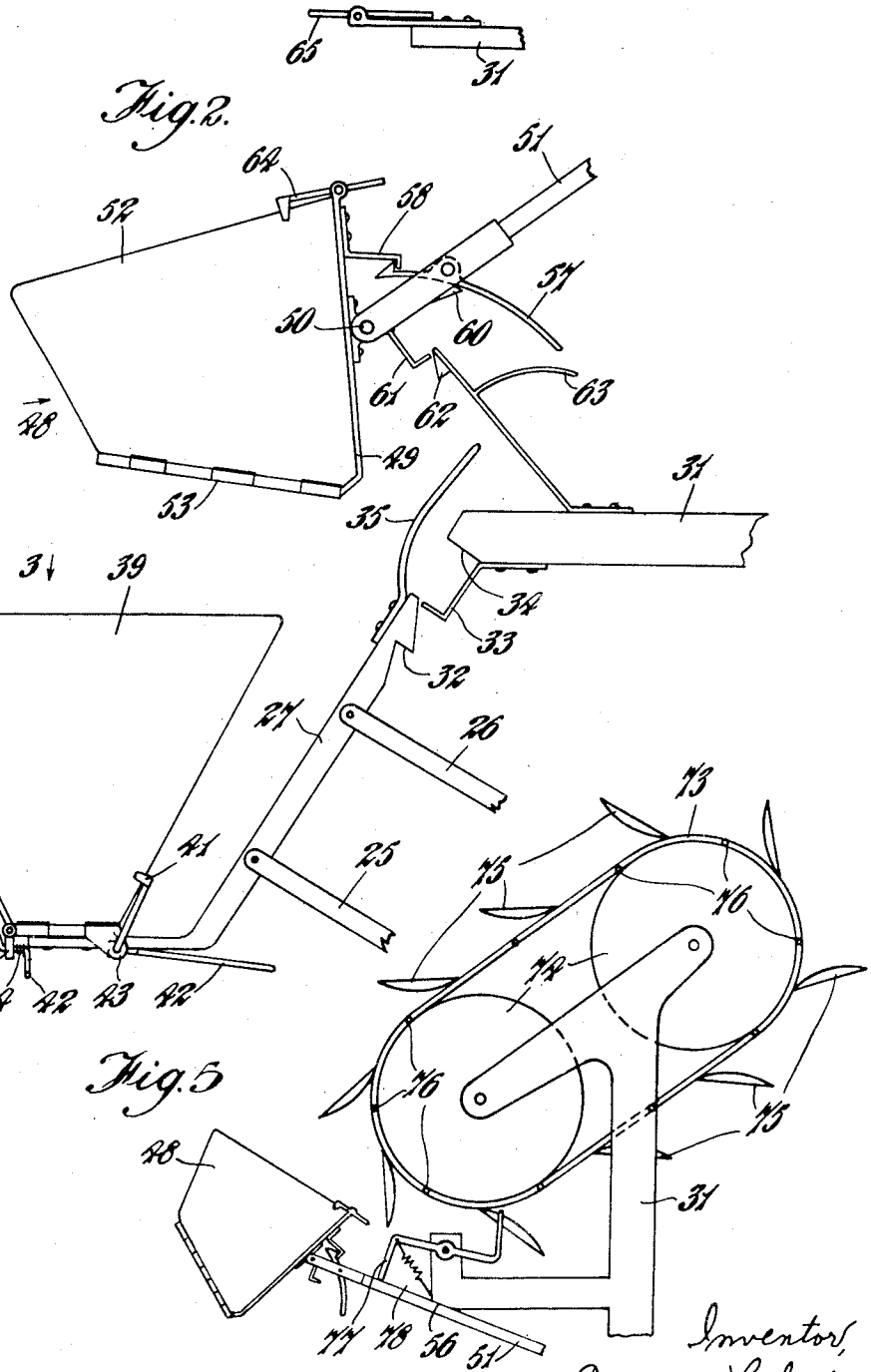


Fig. 5

Inventor,
Bernard Loshak,
by Frank A. Appleman
attorney

Patented Jan. 7, 1941 2,227,788

# UNITED STATES PATENT OFFICE

2,227,788

## WEIGHT-GRADING APPARATUS

Bernard Loshak, Boxford, near Colchester, England

Application April 21, 1938, Serial No. 203,460
In Great Britain April 23, 1937

8 Claims. (Cl. 209—121)

This invention relates to apparatus for sorting or grading articles according to their weight, and particularly to articles such as fruit and vegetables of a globular shape.

It is an object of the present invention to provide an apparatus of this kind, comprising a cradle on a horizontally pivoted beam wherein by reason of the preliminary rejection of underweight articles the grading mechanism can operate with increased rapidity on the articles within the range of weights it is desired to grade.

It is another object of the invention to feed an article from the rejecting means to the grading cradle only when the latter is in receiving position by retaining the cradle in that position when empty until it is released therefrom by the weight of an article.

It is a further object of the invention to delay the action of the rejecting means to deliver an article above the given weight into the grading cradle when the latter is not in its receiving position.

It is a further object of the invention to provide a conveyor for feeding the articles one at a time to the rejecting means, the conveyor being controlled by the latter so that it is operable only when the rejecting means is ready to receive an article.

By these various means it is possible to operate a weight grading apparatus of the kind indicated with maximum efficiency.

Other objects and advantages of the invention will be apparent from the following description when read in connection with the accompanying drawings, in which—

Fig. 1 is a diagrammatic side elevation of one form of complete grading machine;

Fig. 2 is an enlarged view of the cradles and releasing mechanism of Fig. 1;

Figs. 3 and 4 are a plan and cross section of one form of feed belt, and

Fig. 5 shows an alternative form of feed mechanism.

In order to provide a compact mechanism it is desirable that the beam shall be relatively short, and in this case when there is a considerable number of grades of articles to be separated, it is necessary that the beam shall be capable of swinging through a large angle in order to allow sufficient space for each grade. It is also desirable that the axis of the cradle shall remain substantially vertical throughout its downward swing, so as to prevent an article from falling out of the cradle due to canting of the latter during its swing. This is effected by providing the beam in the form of a parallel link device, as shown in Fig. 1. In this arrangement the beam comprises a pair of parallel spaced arms **25** and **26** which are pivoted at their ends to two links **27** and **28**. The lower end of the arm **25** is fixed on a spindle **29** rotatably mounted in bearings **30** secured to the frame **31** of the machine and the spindle **29** carries a cam **11** to the periphery of which is attached a cord **13** which passes over a guide pulley **17**, and carries the control weight **15** on its lower end. The lower end of the upper link **27** extends horizontally towards the front of the mechanism and carries the triangular pyramidal cradle **3** for the articles to be graded, and the other end of the link **27** is slotted or notched at **32** to engage a fixed catch **33** on the frame which retains the cradle **3** when empty in its uppermost position, and a fixed stop **34** is provided to limit the upward swing of the beam and cradle. The upper end of the link **27** also carries a projecting arm **35**. The lower end of the link **28** pivots on the spindle **29** and has a pin **36** on its other end which passes through a slot in an inclined fixed bracket **37**, and a weight **38** is fixed to the link **28** which retains the pin **36** at the lower end of its slot and the notch **32** on link **27** in engagement with the catch **33**, when the cradle **3** is empty and at the top of its swing.

The cradle **3** is mounted on the lower end of the link **27** and has three outwardly inclined sides or flaps, two of which, **39** and **40**, are shown. These sides or flaps are hinged at their lower edge and are retained in their uppermost or closed position by means of catches **41** on the upper end of cranked arms **42** pivotally mounted in brackets **43** fixed to the base of the cradle **3**. Springs **44**, Fig. 2, are provided on the cranked arms **42** to retain them in the position with the catches **41** engaging the side of the cradle flaps, which latter are urged to their closed position, when the cradle is empty, by springs (not shown) on their hinges.

A series of inclined and vertically spaced discharge chutes **45** are mounted adjacent the path of the swing of the cradle **3**, and opposite each of its sides (in Fig. 1 only the chutes opposite the side **40** are shown), and each chute **45** carries a bracket **46** to the free end of which is pivoted a finger **47**, the outer end of which can swing downwards from the position shown but not upwards, and projects into the path of the swing of the outwardly extending end of the arm **42**. The chutes not shown are spaced apart in a similar manner to the chutes **45**, but sub-divide the spaces between these chutes **45**, so that each chute is disposed at a different level from the others.

By employing a cradle which opens on more than one of its sides to discharge the articles as they are graded, it is thus possible to provide a relatively large number of chutes for receiving these graded articles for a given arc of swing of the beam, and this feature, together with the relatively short beam having a parallel linkage, results in an increase in the speed of operation of the apparatus over previously proposed grading machines.

The machine shown in Fig. 1 has a second cradle **48** mounted above the grading cradle **3**, the purpose of which is to eliminate articles below a given minimum weight which have been fed to the machine and to deposit the article as lightly as possible into the grading cradle and so prevent the latter from being released by an article under the minimum weight. This cradle **48** is also of triangular shape with its rear side **49** pivoted at **50** to one end of a beam **51**, and the other two sides **52** (one only of which is shown) are hinged together along their lower edges, the hinge **53** being secured at one end to the lower corner of the side **49**, and the sides **52** are urged to their uppermost or closed position by means of a spring (not shown) on the hinge **53**, when the cradle **48** is empty.

The beam **51** is mounted at **54** to swing vertically in a bearing fixed to the frame **31** of the machine, and has a counterweight **55** adjustably mounted on its end opposite to the cradle **48**, so that when the cradle **48** is empty the beam rests in its uppermost position against a fixed stop **56** on the frame.

The cradle **48** is normally prevented from swinging about the pivot **50** and held in its uppermost position relative to the beam **51**, by means of a trigger **57** pivoted to the beam **51**, with its upper end arranged to engage a catch **58** on the back **49** of the cradle, a stop **60**, Fig. 2, being provided to retain the trigger **57** in a position so that it can re-engage the catch **58** after it has been released. A catch **61** is fixed on the underside of the beam **51** adjacent the pivot **50**, and is arranged to engage a spring trigger **62** mounted on an arm on the frame **31** when the beam is at the bottom of its swing; and the trigger **62** is provided with a rearwardly projecting finger **63**.

The sides **52** of the cradle **48** are retained in their closed position by means of catches **64** pivoted on the upper corners of the back **49**, and their rearwardly projecting ends are arranged to engage pivoted fingers **65** on the frame similar to the fingers **47** when the cradle **48** swings vertically, so that the sides **52** are released to swing outwardly owing to the weight of an article in the cradle **48** only during the upward swing of the latter. Also discharge chutes **66** are provided at each side of the path of swing of the cradle **48** for receiving the underweight articles discharged therefrom. The chute **66** and corresponding releasing fingers **65** on one side of the cradle **48** may be disposed at a different level from those on the opposite side so that underweight articles within two different limits of weight may be separated from each other.

The feeding mechanism in the apparatus illustrated in Fig. 1 consists of an endless belt **67** mounted on rollers or pulleys **68** and driven in the direction of the arrow by any suitable means. The outer surface of the belt **67** is curved as shown in Fig. 4 and has depressions **69** spaced along its length which are just sufficiently large to retain a single article to be graded.

The articles are fed to the machine by means of an endless belt conveyor **70** from which they pass down an inclined guide chute **71**, on to the belt **67**; only one article can remain in each depression, and the others roll off and fall on to travelling belts **72** on each side of the belt **67** and are returned to the point from which they are fed on to the conveyor **70**.

As the belt **67** moves forward the articles fall from the depressions **69** into the cradle **48** which then swings downward. The speed of the belt **67** is regulated so that the rate at which the articles are fed to the cradle **48** does not exceed the time of a downward and return swing of the cradle.

If the article in the cradle **48** is equal to or above the given minimum weight to be graded, the cradle with the beam **51** will swing down to the full extent of its travel, and if the grading cradle is in its uppermost position as shown in Fig. 1, the spring trigger **62** will be pushed back by the finger **35**, so that the trigger **62** does not engage the catch **61**, but the finger **63** on the trigger will engage the lower end of the trigger **57** and release it from the catch **58**, thus allowing the cradle to tip forward and deposit the article into the grading cradle **3**, after which the cradle **48** and beam **51** swing back to their uppermost position, and as the beam **51** strikes the stop **56**, the empty cradle **48** tips up due to its momentum, so that the trigger **57** re-engages the catch **58** and retains the cradle **48** in position ready to receive another article.

As the cradle **48** swings downwards the catches **64** contact with the fingers **65** and cause the latter to turn about their pivots without releasing the catches **64**. However, if the article deposited in the cradle **48** is below the given minimum weight, the latter will swing down through an angle smaller than the full extent of the swing, thus failing to discharge the article from the cradle and as it swings back the catch **64** engages the finger **65** which, since it cannot move upwards, causes the catch **64** to turn and release the cradle side **52**, which then swings outwards due to the weight of the article, which latter is then discharged into the chute **66**; whereupon the side swings back to its closed position due to the spring on the hinge **53**, and the cradle returns to its uppermost position.

If the grading cradle **3** is not in position at the top of its swing when the cradle **48** reaches its lowest point, the latter cradle will be retained in this position by the catch **61** which engages the spring trigger **62** and the finger **63** will not contact the trigger **57** and when the cradle **3** returns to the top of its swing the finger **35** releases the spring trigger **62** from the catch **61** and causes the finger **63** to release the trigger **57** from the catch **58**, so that the article is discharged from the cradle **48** and the latter swings back as described above.

As soon as an article is deposited into the grading cradle **3**, the link **27** pivots on the upper end of the arm **25**, thus releasing the catch **33** and causing the pin **36** to move to the upper end of its slot in the bracket **37**, the weight **38** being adjusted so that the lightest article to be graded will release the catch **33** when placed in the grading cradle **3**.

The cradle **3** then swings downwards and the extent of this swing is the greater according as the weight of the article in the cradle is greater,

and during this downward swing the cord 13 wraps round the curved periphery of the cam 11 so that the leverage of the balance weight 15 is increased as the extent of the swing increases, and the contour of the cam is of such a shape that the beam and grading cradle 3 swing through substantially equal angles for each equal increment of weight added to the grading cradle.

As the grading cradle descends the projecting ends of the cranked arms 42 depress each of the fingers 47 in turn as they swing past, without releasing the catches 41. When the cradle commences its return swing one of the projecting arms 42 contacts the underside of the lowest finger 47 which it has just passed, and since this latter finger cannot move up, the projecting arm 42 is pressed down thus releasing the catch 41, so that the corresponding side of the cradle swings out on its hinge under the weight of the article, which latter is discharged into the corresponding chute 45, and the cradle side swings back into its closed position, the outer face of the catch 41 being bevelled to allow the cradle flap to move past, after which the cradle 3 swings back to its uppermost position and is retained by the catch 33 ready to receive another article.

The feeding mechanism shown in Fig. 5 consists of an endless belt 73 mounted on pulleys or rollers 74 which are free to rotate in the fixed frame 31 of the machine. Attached to the outer surface of the belt 73 throughout its length is a series of spaced shallow cups 75 which are just sufficiently large to hold a single article to be graded; also projecting from one side of the belt is a series of pins 76 spaced apart at a distance equal to the spacing of the cups 75. An approximately Z-shaped member is pivoted at about its centre to an arm of the frame 31 and is urged by a spring 78 so that its downwardly directed arm contacts the beam 51, when the latter rests against the stop 56, and so that its upwardly directed arm 77 extends into the path of travel of the pins 76.

The articles are fed into the cups 75 on the upper sloping run of the belt 73, and travel down by their own weight towards the cradle 48 into which they are discharged. When this cradle 48 is in its uppermost position, as shown, the beam 51 presses up the left hand arm of the member 77 so that its right hand arm is moved out of the path of the pins 76 to allow the belt 73 to rotate. When an article is deposited in the cradle 48 and the beam 51 moves down, the member 77 turns about its pivot so that its right hand end comes into the path of the pins 76, thus preventing further feeding movement of the belt until it is again released when the beam 51 returns to the top of its swing.

If desired the upper cradle 48 may be omitted from the machine so that the articles will be fed directly into the grading cradle 3, in which case, if the feeding mechanism shown in Fig. 5 is employed, means may be provided on the parallel link beam for operating the feed release member 77.

Also, if desired, the cradle may be of other than triangular cross-section and one or more of its sides may be formed as hinged flaps as described, the remainder being fixed, in which case it is only necessary to provide discharge chutes opposite the sides which are arranged to open.

What I claim is:

1. Apparatus for grading articles according to weight, comprising in combination a beam pivoted at one end on a fixed horizontal axis, a grading cradle on the other end of the beam, a balance weight so connected to the pivoted end of the beam that the leverage of said weight is progressively increased as the extent of the downward swing of the beam is increased, means whereby an article is released from the grading cradle adjacent the bottom of its swing, means such as a second pivoted beam and cradle disposed above the grading cradle and adapted at the bottom of its swing to deposit an article above a given weight into the grading cradle and to reject an article below the given weight on its return swing, a catch associated with the first named beam whereby the grading cradle is retained in its top position when empty, and is released therefrom by the weight of an article in said grading cradle, and a further catch associated with the second cradle whereby said second cradle, when loaded with an article above the given weight, is retained at the bottom of its swing when the grading cradle is not in its top position.

2. Apparatus for grading articles according to weight, comprising in combination a beam pivoted at one end on a fixed horizontal axis, a grading cradle on the other end of the beam, a balance weight so connected to the pivoted end of the beam that the leverage of said weight is progressively increased as the extent of the downward swing of the beam is increased, means whereby an article is released from the grading cradle adjacent the bottom of its swing, means such as a second pivoted beam and cradle disposed above the grading cradle and adapted to deposit an article above a given weight into the grading cradle at the bottom of its swing and to reject an article below the given weight on its return swing, an endless conveyor disposed above the second cradle, whereby articles to be graded are fed singly to the second cradle, and feed control means operated by the second named beam, whereby the feed conveyor is operable only when the second cradle is in its top position.

3. Apparatus for grading articles according to weight comprising in combination a beam pivoted on a fixed horizontal axis, a grading cradle on the beam, means for varying the downward swing of the beam according to the weight of an article loaded into the cradle, rejecting means adapted to deposit an article above a given weight into the grading cradle and to reject an article below the given weight, means whereby an article is released from the grading cradle adjacent the bottom of its swing, and means whereby the said grading cradle is retained in its receiving position when empty and is released therefrom by the weight of an article in the said grading cradle.

4. Apparatus for grading articles according to weight comprising in combination a beam pivoted on a fixed horizontal axis, a grading cradle on the beam, means for varying the downward swing of the beam according to the weight of an article loaded into the cradle, rejecting means adapted to deposit an article above a given weight into the grading cradle and to reject an article below the given weight, means whereby an article is released from the grading cradle adjacent the bottom of its swing, means whereby the said grading cradle is retained in its receiving position when empty and is released therefrom by the weight of an article in the said grading cradle, and means whereby the action of the rejecting means to deliver an article above the given weight into the said grading cradle is delayed

when the said grading cradle is not in its receiving position.

5. Apparatus for grading articles according to weight comprising in combination a beam pivoted on a fixed horizontal axis, a grading cradle on the beam, means for varying the downward swing of the beam according to the weight of an article loaded into the cradle, rejecting means adapted to deposit an article above a given weight into the grading cradle and to reject an article below the given weight, means whereby an article is released from the grading cradle adjacent the bottom of its swing, a conveyor whereby articles to be graded are fed singly to the rejecting means, and feed control means operated by the rejecting means whereby the conveyor is operable only when the rejecting means is ready to receive an article.

6. Apparatus for grading articles according to weight, comprising in combination a beam pivoted at one end on a fixed horizontal axis, a grading cradle on the other end of the beam, a balance weight so connected to the pivoted end of the beam that the leverage of said weight is progressively increased as the extent of the downward swing of the beam is increased, means whereby an article is released from the grading cradle adjacent the bottom of its swing, rejecting means including a second pivoted beam and cradle disposed above the grading cradle and adapted at the bottom of its swing to deposit an article above a given weight into the grading cradle and to reject an article below the given weight on its return swing, a catch associated with the first named beam whereby the grading cradle is retained in its top position when empty and is released therefrom by the weight of an article in said grading cradle and a further catch associated with the second cradle whereby said second cradle, when loaded with an article above the given weight, is retained at the bottom of its swing when the grading cradle is not in its top position.

7. Apparatus for grading articles according to weight, comprising in combination a beam pivoted at one end on a fixed horizontal axis, a grading cradle on the other end of the beam, a balance weight so connected to the pivoted end of the beam that the leverage of said weight is progressively increased as the extent of the downward swing of the beam is increased, means whereby an article is released from the grading cradle adjacent the bottom of its swing, rejecting means including a second pivoted beam and cradle disposed above the grading cradle and adapted at the bottom of its swing to deposit an article above a given weight into the grading cradle and to reject an article below the given weight on its return swing, an endless conveyor disposed above the second cradle whereby articles to be graded are fed singly to the second cradle, and feed control means operated by the second named beam whereby the feed conveyor is operable only when the second cradle is in its top position.

8. Apparatus for grading articles according to weight, comprising in combination a beam pivoted on a fixed horizontal axis, a grading cradle on the beam, means for varying the downward swing of the beam according to the weight of an article loaded into the cradle, rejecting means adapted to deposit an article above a given weight into the grading cradle and to reject an article below the given weight, means whereby an article is released from the grading cradle adjacent the bottom of its swing, a retaining latch operative to hold the cradle in its receiving position as long as the cradle is empty, and means actuated by the article being deposited into said cradle for releasing said latch to permit said beam to be depressed in accordance with the weight of the article to be graded.

BERNARD LOSHAK.