June 26, 1956 R. W. BACHI 2,752,188

ELECTROMAGNETICALLY OPERATED DOOR LATCH MECHANISM

Filed April 8, 1953 5 Sheets-Sheet 1

Fig. 2.

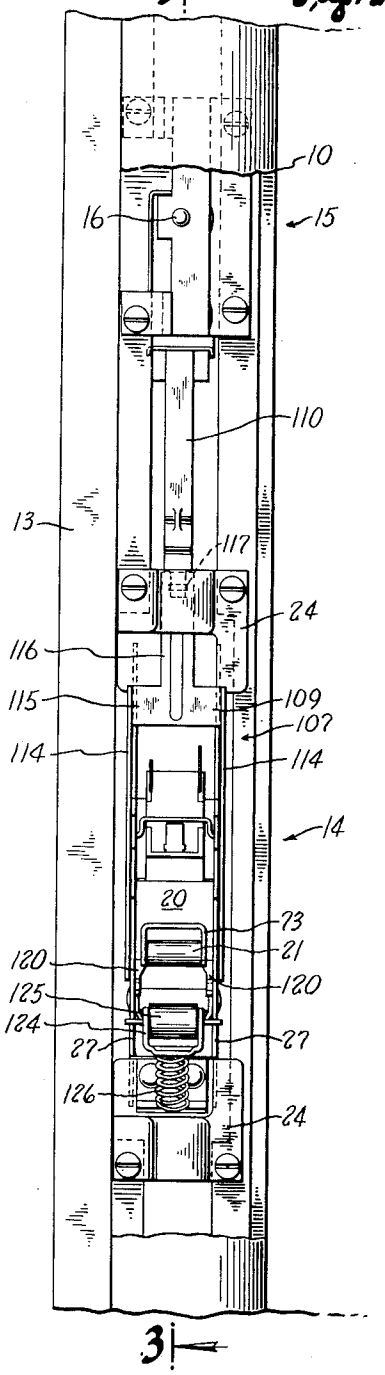

Fig. 1.

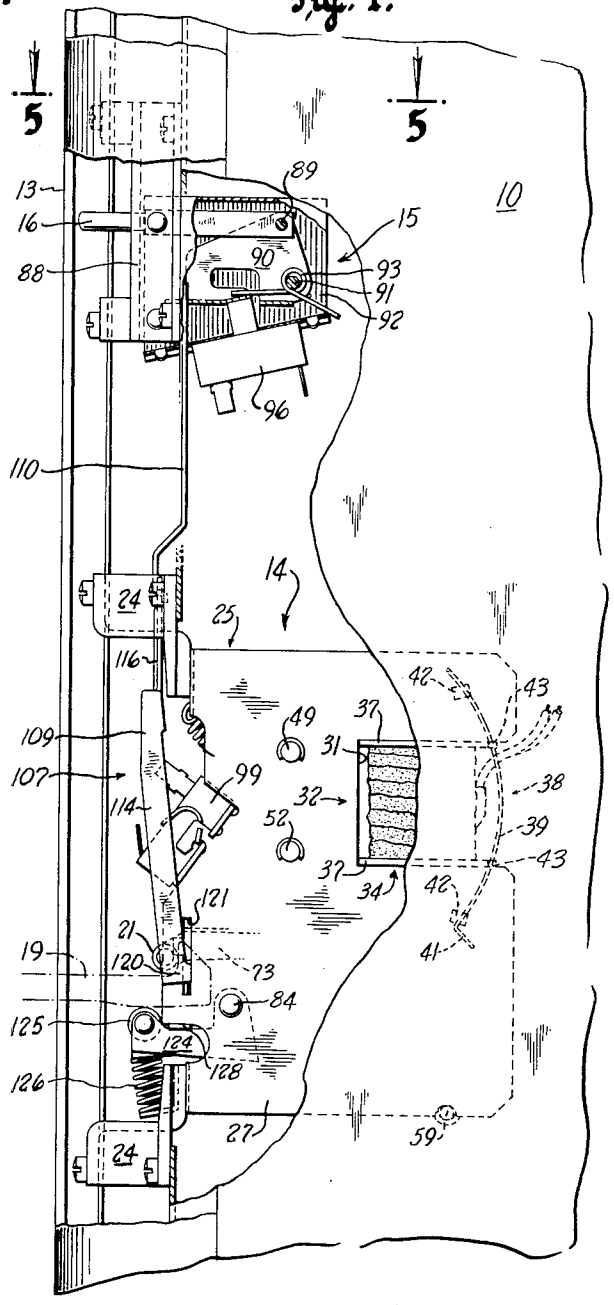

Inventor
Robert W. Bachi
By Dewitt Jones
Attorney

June 26, 1956 R. W. BACHI 2,752,188

ELECTROMAGNETICALLY OPERATED DOOR LATCH MECHANISM

Filed April 8, 1953 5 Sheets-Sheet 2

Fig. 3.

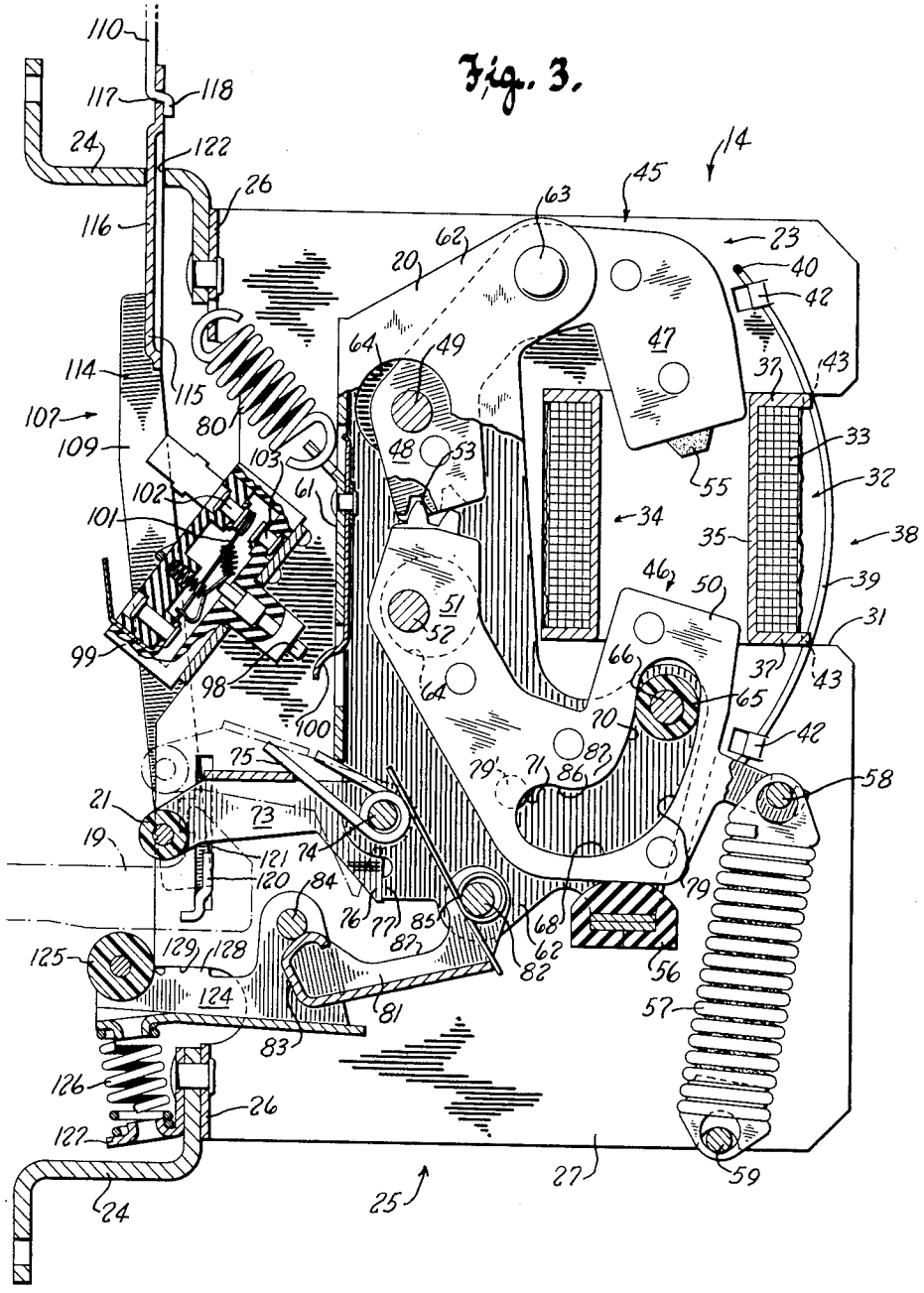

Inventor
Robert W. Bachi
By [illegible]
Attorney

June 26, 1956 R. W. BACHI 2,752,188

ELECTROMAGNETICALLY OPERATED DOOR LATCH MECHANISM

Filed April 8, 1953 5 Sheets-Sheet 3

Fig. 4.

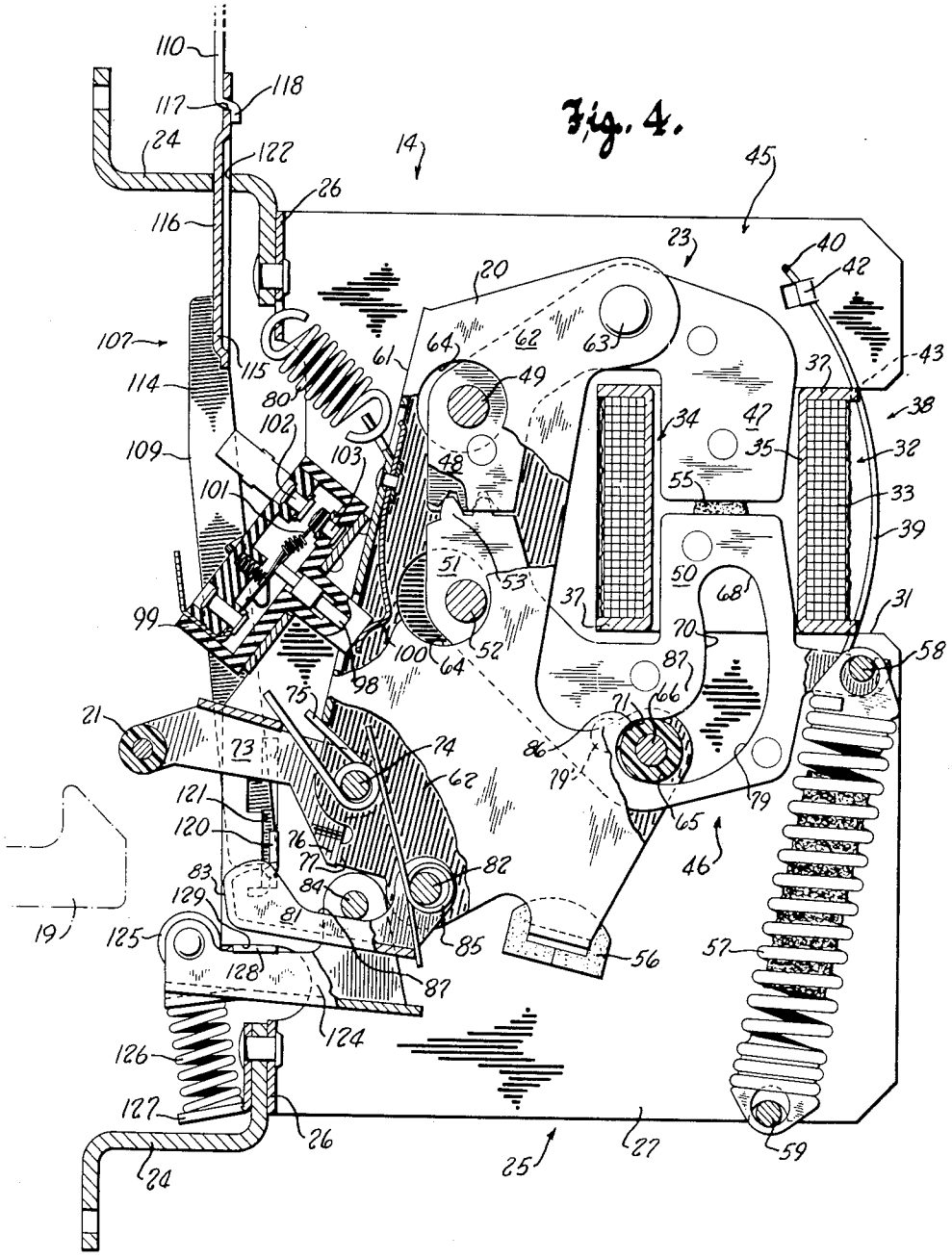

Inventor
Robert W. Bachi
By Dean Middleton & Jones
Attorneys

June 26, 1956 R. W. BACHI 2,752,188

ELECTROMAGNETICALLY OPERATED DOOR LATCH MECHANISM

Filed April 8, 1953 5 Sheets-Sheet 4

Fig. 5.

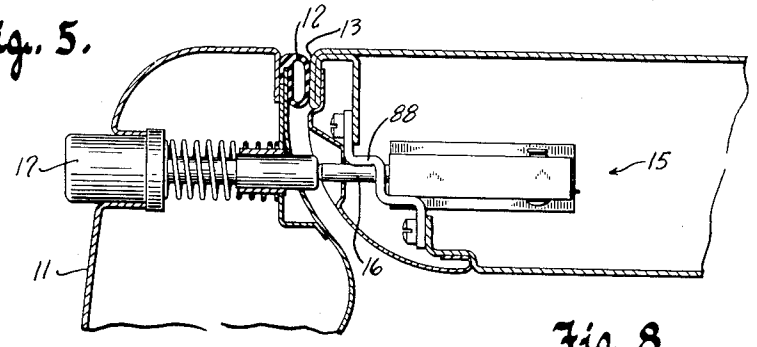

Fig. 8.

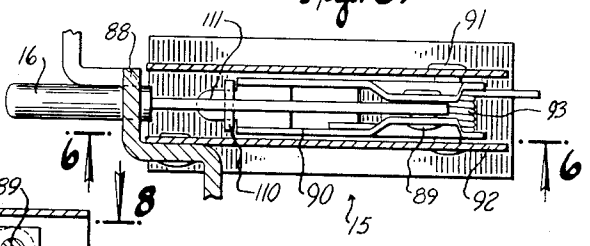

Fig. 6.

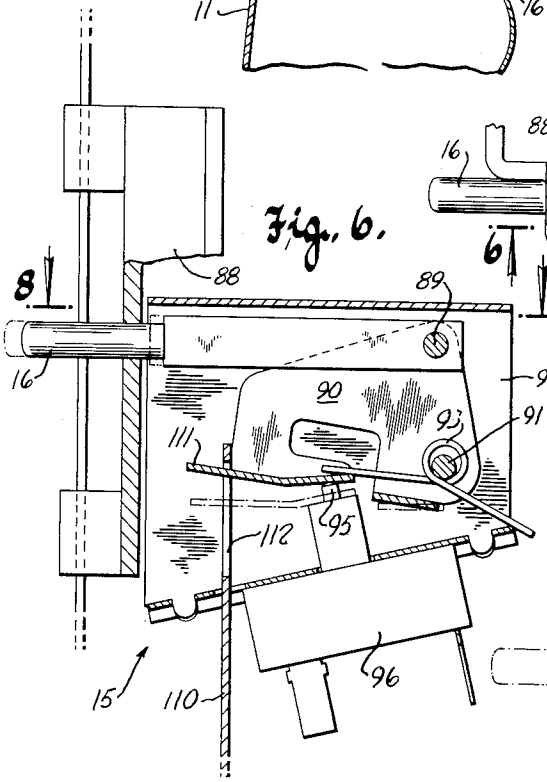

Fig. 7.

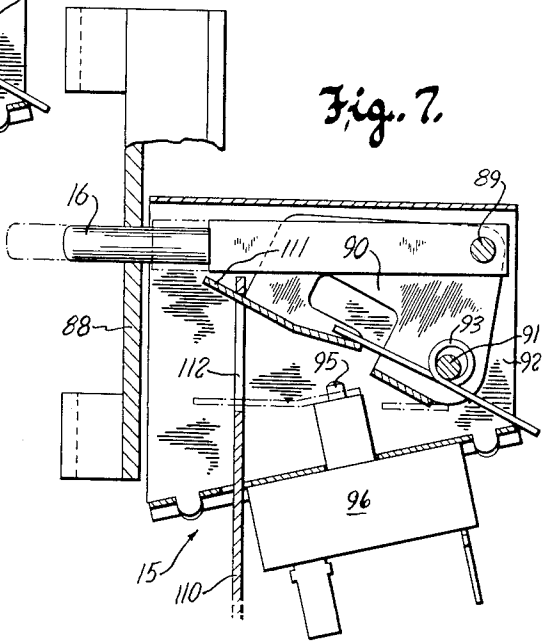

Fig. 9.

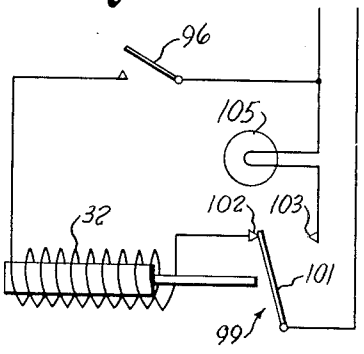

Inventor
Robert W. Bachi
By Charlton & Jones
Attorney

June 26, 1956 R. W. BACHI 2,752,188

ELECTROMAGNETICALLY OPERATED DOOR LATCH MECHANISM

Filed April 8, 1953 5 Sheets-Sheet 5

Fig. 10.

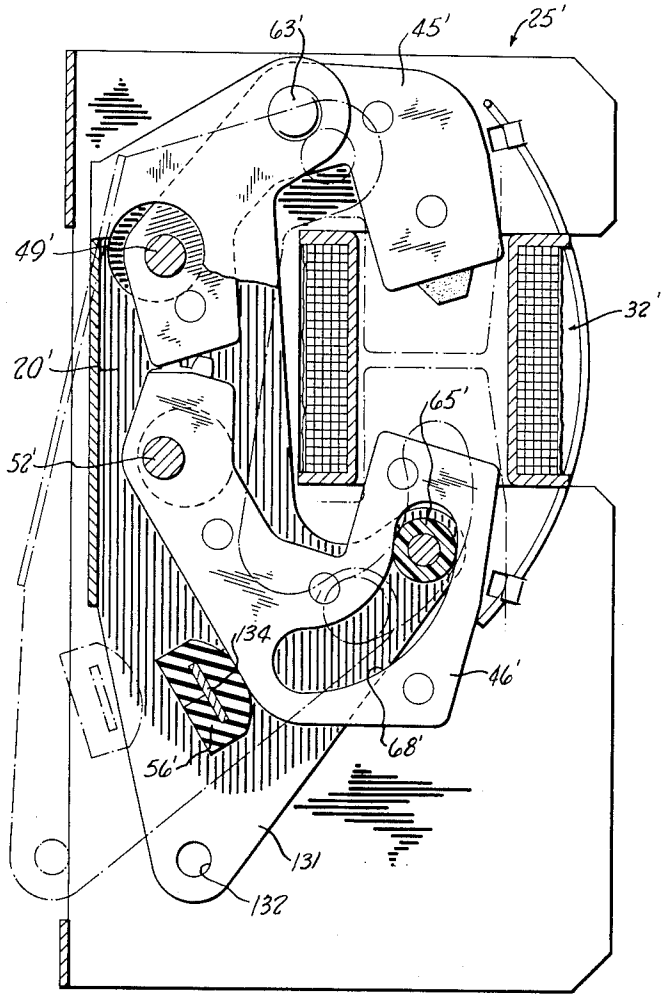

Inventor
Robert W. Bachi
By Ira Milton Jones
Attorney

United States Patent Office 2,752,188
Patented June 26, 1956

2,752,188

ELECTROMAGNETICALLY OPERATED DOOR LATCH MECHANISM

Robert W. Bachi, Itasca, Ill., assignor to Soreng Products Corporation, Schiller Park, Ill., a corporation of Delaware

Application April 8, 1953, Serial No. 347,437

24 Claims. (Cl. 292—332)

This invention relates generally to latch mechanisms and has more particular reference to an electromagnetically operated latch which is in some respects similar to that forming the subject matter of the copending application of Robert W. Bachi and Hardin Y. Fisher, Serial No. 270,924, filed February 11, 1952.

As in the aforesaid copending application it is the main purpose of this invention to provide an improved door latch mechanism primarily though not exclusively suited for electromagnetic operation, and wherein the number of parts of the mechanism is minimized through the expedient of incorporating the core means for the electromagnet into the latch mechanism. According to the present invention, this objective is achieved through the provision of a unitary electromagnetic actuator having core means and an operating link carried thereby to form a part of the electromagnetic actuator, with the link interconnected with the core means in an exceptionally unique manner which enables the operating link itself to function as the latching element of the latch mechanism.

A further purpose of this invention resides in the provision of an electromagnetic latch mechanism wherein the latching element is not only provided by an operating link forming a unitary part of the electromagnetic operator but has a cam connection with the core means of the electromagnet whereby the latching element is cammed by the core means back and forth between its latching and unlatching positions during motion of the core means between attracted and retracted positions. In this connection it is a further purpose of this invention to provide an electromagnetically operated door latch mechanism of the character described wherein the cam connection between the latching element and the core means is operable to releasably hold the latching element in a cocked unlatching position in consequence of response of the core means to energization of the electromagnet; and wherein such response of the core means loads a relatively strong spring, the force of which is released upon tripping of the latching element out of its cocked or unlatching position, by the act of closing the door, to effect forceful return of the latching element to its latching position and the application of a force on the keeper with which it engages great enough to tightly hold the door closed.

Perhaps the main objection to electromagnetically operated latch mechanisms heretofore provided has been their extremely noisy operation caused chiefly by the impact of the core means against a stop during final seating thereof. Invariably the core means seated with a hammer blow that was objectionably loud and with such force that it frequently resulted in serious damage to the means upon which the latch mechanism was mounted. With this objection in mind it is a further purpose of this invention to provide an electromagnetic door latch mechanism wherein the core means seats substantially without hammer blow and without imposing any objectionable strain upon the mounting means for the electromagnet.

In this connection it is a more specific purpose of this

invention to provide an electromagnetic operator having core means comprising two armatures pivoted to swing toward and from one another in unison about spaced apart parallel axes, so that the armatures will strike against one another as they reach their attracted positions and their inertia forces will be substantially balanced.

A further purpose of this invention resides in the provision of an electromagnetic operator of the character described wherein the operating link is interconnected between the two pivoted armatures in such a manner that it will control the speed with which the armatures respond to energization of the electromagnet and effect deceleration of their motion toward the end of their attraction and retraction strokes to thereby contribute toward quieter operation.

Still another purpose of this invention resides in the provision of electromagnetically operated latch mechanism of the character described with improved manually operable means for releasing the latch bolt entirely independently of the electromagnet or its core means.

With the above and other objects in view, which will appear as the description proceeds, this invention resides in the novel construction, combination and arrangement of parts substantially as hereinafter described and more particularly defined by the appended claims, it being understood that such changes in the precise embodiment of the hereindisclosed invention may be made as come within the scope of the claims.

The accompanying drawings illustrate two complete examples of the physical embodiments of the invention constructed according to the best modes so far devised for the practical application of the principles thereof, and in which:

Figure 1 is a view partly in side elevation and partly in section showing the latch mechanism of this invention installed in one side wall of a refrigerator cabinet and illustrating the latch bolt in an operative keeper engaging position;

Figure 2 is a front view of the mechanism shown in Figure 1, with portions of the cabinet wall broken away;

Figure 3 is an enlarged vertical sectional view taken through Figure 2 along the plane of the line **3—3**, but showing the latch mechanism removed from the refrigerator cabinet;

Figure 4 is a view similar to Figure 3 but illustrating the positions of the component parts of the latch mechanism in the unlatching condition thereof;

Figure 5 is an enlarged fragmentary sectional view taken through Figure 1 along the plane of the line **5—5**, but including a portion of the refrigerator door;

Figure 6 is a detail view partly in elevation and partly in vertical section, taken generally along the line **6—6** of Figure 8, illustrating the combined electrical and manual control means for the latch mechanism, and showing the manner in which partial depression of a push button effects energization of the electromagnet;

Figure 7 is a view similar to Figure 6 but illustrating the manner in which further depression of the push button may effect manual release of the latching mechanism;

Figure 8 is a section view taken through Figure 6 along the plane of the line **8—8**;

Figure 9 is an electrical diagram illustrating the manner in which the circuits for the electromagnet and the interior light of the refrigerator are controlled; and

Figure 10 is a view similar to Figure 3 but showing a slightly modified type of electromagnetic operator per se.

Referring now more particularly to the accompanying drawings in which like reference characters identify like parts throughout the several views, it will be noted that a refrigerator has been chosen to illustrate one application of the door latch mechanism of this invention. The

numeral 10 designates the front portion of one side wall of the refrigerator cabinet, the usual hinged door 11 being provided (see Figure 5) to close the opening in the front of the cabinet. As is customary, the door is provided with a hollow sealing strip or gasket 12 extending around the marginal edge of the door at its underside, to be held under compression between the underside of the door and the front 13 of the cabinet when the door is latched closed to tightly seal the door opening in the cabinet.

The latch mechanism of this invention generally designated 14 is preferably, though not necessarily, mounted in the front of the side wall 10 of the cabinet, opposite the free upright edge of the refrigerator door, and substantially midway between the upper and lower limits of the door opening. The combined electrical and manual control means 15 for the latch mechanism is likewise mounted in the side wall 10 any suitable distance above the latch mechanism and with a plunger 16 projecting forwardly through the front edge of the cabinet wall to face the underside of the door directly behind and in line with a push button actuator 17 on the door to enable the latching mechanism to be operated either electrically or manually from the exterior of the refrigerator.

The latch mechanism 14 is mounted directly behind a rearwardly projecting hook-shaped keeper 19 on the door, and includes a latching element 20 having a latch bolt 21 thereon which engages forwardly over the upwardly projecting hook on the keeper in the manner shown in Figures 1 and 3 to latch the door closed. An electromagnetic operator, designated 23, forms part of the latch mechanism and imparts latching and unlatching motion to the latching element 20.

The entire latch mechanism is unitarily carried by a mounting bracket 25 stamped of sheet metal and having a substantially U-shaped cross section. Attaching clips 24 secure the bracket in place inside the front portion of the wall 10 of the cabinet with the bight 26 of the bracket generally vertical and foremost, and cut away except for relatively narrow transverse strips at the upper and lower extremities of the bracket. The legs 27 of the U-shaped bracket extend rearwardly from the bight 26 to lie in spaced vertical planes parallel to the side wall 10. It will be understood, of course, that at the area of the latch bolt 21, front edge portions of the cabinet wall 10 are cut away to accommodate the hook-shaped rear end of the keeper when the door is closed.

At their upper rear portions, the legs 27 of the bracket have opposite square cut notches 31 therein, opening to their rear extremities, to receive the coil 32 of the electromagnetic operator. The coil comprises a winding 33 and a bobbin 34 of insulating material providing a tubular support 35 for the coil substantially rectangular in cross section, and having end flanges 37 embracing the ends of the winding and likewise substantially rectangular in outline.

The axial length of the coil fits the vertical dimension or width of the notches 31 relatively snugly, and the edge engagement of the flanged ends 37 of the bobbin with the bottoms of the notches is relied upon to locate the coil with its axis vertical and parallel to the legs 27 of the mounting bracket, and midway between said legs.

The manner in which the coil is secured to the bracket 25 also serves to reinforce the rear portions of its legs 27. As shown best in Figures 1 and 3 the coil is held in place on the bracket by means of a U-shaped spring wire retainer generally designated 38 having elongated flexible normally straight legs 39 spaced apart to closely overlie the opposing surfaces of the legs 27 of the mounting bracket. The bight end 40 of the U-shaped wire extends straight across between the two legs 39 at one end of the retainer and at its opposite ends the legs are bent up to provide hooks 41.

Both of the legs 27 of the mounting bracket are provided with pairs of opposite indented flaps 42 opening toward the bight end of the mounting bracket and located

a slight distance from each end of the coil 32. The spring wire retainer has its hooked ends engaged under the lower pair of flaps 42, beneath the coil, while the upper end portions of the wire legs are hooked under the flaps 42 above the coil. When so engaged under the flaps 42 the medial portions of the wire legs are bowed rearwardly and tensioned by their engagement with the rear edges of the bobbin flanges, and this tension is relied upon to not only tightly maintain the coil in the bottoms of the notches 31 but to also maintain the intermediate portions of the wire legs engaged in notches 43 cut in the rear corners of the bobbin to thus hold the coil against all shifting relative to the mounting bracket.

In installing the spring wire retainer 38, the hooked ends of its legs may first be engaged under the lower flaps 42, and then its bight end may be forced forwardly over the upper flaps 42 of the mounting bracket and engaged under the upper flaps 42. As the retainer engages the upper flaps 42, it will be appreciated that the mounting bracket legs spread apart and then snap back toward one another after the bight end portion of the retainer has passed the flaps and has sprung back under them. When in retaining position, therefore, the legs of the retaining wire cooperate with the corner notched flanges of the bobbin to preclude flatwise motion of the bracket legs 27 toward one another.

The electromagnetic operator 23 includes actuating means for shifting the latching element 20 between its latching and unlatching positions shown, respectively, in Figures 3 and 4. It is one of the features of the latch mechanism of this invention that the actuator for the latching element is comprised of core means in the form of a pair of movable armatures 45 and 46. The armature 45 is disposed uppermost and is of substantially inverted U-shape in outline. The rearmost leg 47 of the armature provides a pole portion extending into the upper end of the coil 32, while the remaining leg 48 extends around to the front of the coil to be mounted on a pivot pin 49 having its opposite ends fixed in the legs 27 of the mounting bracket. Hence, the upper armature 45 may swing back and forth in an arc about an axis crosswise of the coil axis.

The lower armature 46 is likewise of U-shape and its rear leg 50 provides a pole portion projecting into the lower end of the coil. The foremost leg 51 of the lower armature also extends around the lower end of the coil to the front side thereof to be mounted on a pivot pin 52 spaced a distance beneath but parallel to the pivot pin 49, and having its ends similarly anchored in the opposite legs of the mounting bracket. In addition, the two armatures are interconnected so that their pole portions swing toward and from one another in unison; and while any suitable means may be employed to interconnect the two armatures, one of the simplest expedients for this purpose has been found to lie in the provision of intermeshing gear teeth 53 formed on the opposing extremities of the front legs of the armatures, integrally with the laminations from which the armatures are built up.

Upon energization of the coil 32, therefore, the two pivoted and interlinked armatures 45 and 46 swing from retracted positions seen in Figure 3 to attracted positions seen in Figure 4 at which their pole portions are contigous to one another inside the center of the coil. Consequently it will be seen that the inertia forces resulting from attraction of the pivoted armatures are substantially balanced, and even though they were allowed to strike one another inside the coil at the end of their attraction strokes, little or no hammer blow would result and substantially no damaging forces would be transmitted to the mounting bracket or the wall 10 of the cabinet upon which the latch mechanism is mounted. For further reduction of noise, however, the upper armature 45 is shown provided with a rubber bumper 55 secured to the pole face of its rear leg 47, the bumper

being compressed between the substantially meeting polar extremities of the two armatures in their attracted positions seen in Figure 4.

The two armatures are yieldingly biased toward retracted positions defined by the engagement of the lower armature **46** with a cushioned stop **56** carried by the latching element **20**, the yielding bias being afforded by a relatively strong tension spring **57** having one end connected as at **58** with the rear leg **50** of the lower armature and its opposite end connected with the mounting bracket as at **59** at a point adjacent to the lower edges of the legs **27** of the bracket. The force of the spring **57**, of course, is overcome by magnetic attraction whenever the coil is energized, and the two armatures move toward one another in unison against the bias of the spring **57** and serve to further load or energize the spring during their attraction strokes for a purpose to be brought out presently.

The latching element **20**, in the present case, is shown as a U-shaped sheet metal stamping having its bight portion **61** disposed generally vertically and overlying the front portions of the two armatures, and having its opposite spaced apart parallel arms **62** substantially embracing the two armatures. The latching element is mounted upon the upper armature **45** so as to move bodily therewith by means of a pivot pin **63** passing through the closed central portion of the upper armature and having its ends received in the portions of the arms **62** on the latching element which embrace the upper armature. Consequently, the pivot pin provides for rocking motion of the latching element relative to the upper armature as well as bodily motion of the latching element therewith.

Enlarged holes **64** in the arms of the latching element receive the pivot pins for the two armatures and permit motion of the latching element between its latching and unlatching positions without interference from the armature pivots.

At its lower rear portion the latching element carries a roller or cam follower **65** mounted thereon between its two arms **62**, the roller being freely rotatably received on a cross pin **66** having its opposite ends fixed in the arms of the latching element. This roller is received in an arcuate cam slot **68** in the lower armature **46**, so that the latching element may be said to be pivotally connected to the upper armature and cam connected to the lower armature.

The cam slot **68** in reality has two arcuate sections, an upwardly extending section **70** which is nearly concentric to the pivot **52** for the lower armature, and a lower forwardly extending section **71** which is nearly concentric to the pivot **63** for the latching element. Because of this peculiar shape of the cam slot and the disposition of the cam roller with respect to the pivot pins **52** and **63**, motion of the two armatures in response to energization of the coil causes the latching element to be rocked or cammed clockwise to its unlatching position seen in Figure 4. Conversely, retracting motion of the armatures causes the latching element to be cammed from its unlatching to its latching position.

The latch bolt **21** comprises a roller mounted on the front end of a channel-shaped arm **73**, between the depending flanges of the arm. The rear end of the arm **73** embraces the lower front portion of the latching element and is pivotally supported on a cross pin **74** carried by the latching element. A torsion spring **75** coiled about the pin **74** and reacting between the latching element **20** and the bolt arm yieldingly maintains the arm in an operative position on the latching element defined by the engagement of opposite inwardly offset toes **76** on the rear portion of the arm, beneath the pivot pin **74**, with opposite abutments **77** on the front of the latching element. The bolt arm, of course, may be swung clockwise on its pivot **74**, against the bias of the torsion spring **75**, to a position disengaged from the keeper **19** in the event of current failure or the like, by the manual control means **15** in a manner to be explained hereinafter.

Attention is directed to the fact that since the pivot **63** for the latching element is located a substantial distance above and slightly rearwardly of the latch arm and its bolt **21**, the bolt will be carried in a forward and upward arc by the latching element, during response of the armatures to energization of the electromagnet, to the keeper releasing position of the bolt seen in Figure 4. What is more important, however, is that the rearward motion of the latch bolt, during travel thereof with the latching element from its unlatching position seen in Figure 4 to its latching position seen in Figure 3, is utilized to pull the door tightly closed by the action of the strong tension spring **57** acting on the latching element and the bolt through the cooperating cam surfaces on the latching element and the lower armature. Since the direction of pull on the upwardly projecting hook of the keeper **19** is substantially in line with the pivot **74** of the latch bolt, there is no tendency for the bolt to pivot clockwise out of its operative position; and the force of the spring **57** is magnified through the cooperating cam surfaces on the latching element and the lower armature to impose a pull on the door in the neighborhood of **60** pounds to draw the door closed and maintain its gasket **12** under sufficient compression as to effectively seal the door opening in the cabinet.

Upon energization of the electromagnet the motion of the two armatures to their attracted positions substantially meeting inside the coil **32** also effects such interengagement between the cam follower **65** on the latching element and the surfaces of the lower end section **71** of the cam slot in the lower armature as to cause the latching element and the bolt thereon to be releasably held in the unlatching position seen in Figure 4. This results from the fact that the cam follower, when propelled into the short forwardly extending section **71** of the cam slot, reaches the "dead" portion of the cam connection at which the surfaces of the slot are substantially concentric to the pivot pin **63** upon which the latching element is mounted. Consequently, retracting motion of the two armatures under the influence of the strong tension spring **57** is effectively precluded until such time as an outside force is applied to the latching element to impart initial counterclockwise rocking motion thereto the extent necessary to carry the cam follower out of the "dead" portion of the cam slot.

The cam follower **65**, of course, is directed into the lower forwardly extending section **71** or "dead" portion of the cam slot by the larger radius surface **79** of the slot during the attraction strokes of the two armatures; and if desired, a relatively light tension spring **80** may be connected between the bight **26** of the mounting bracket at the upper end thereof and the latching element **20** to assure that the follower will reach an extreme position engaging a rubber cushion **79'** embedded in the lower armature at the forward extremity of the cam slot therein.

During clockwise camming of the latching element to its unlatching position, a forwardly projecting finger **81** on the lower front portion of the latching element is brought substantially into the position vacated by the latch bolt and its arm **73**, to align with the keeper **19** on the door. Hence, the trip finger will be engaged by the keeper during closure of the door, to impart the outside force to the latching element necessary to trip the same out of its unlatching position.

The trip finger comprises a channel-shaped arm having upstanding flanges received between the arms **62** of the latching element. A cross pin **82** carried by the latching element slightly beneath and rearwardly of the pivot pin **74** for the latch bolt passes through the rear portions of the flanges of the finger to mount the same for swinging motion relative to the latching element. The trip finger extends forwardly to have its extremity **83** engaged under a cross pin **84**, on the mounting bracket,

under the influence of a torsion spring 85 coiled about the pivot pin 82 and having one end reacting against the trip finger and its opposite end resting upon the coils of the spring 75 which encircle the pivot pin for the latch bolt. The torsion spring 85 at all times tends to swing the trip finger in a clockwise direction, as viewed in Figures 3 and 4, to maintain its outer end portion engaged with the underside of the cross pin 84 on the mounting bracket.

During clockwise camming of the latching element from its latching to unlatching positions, therefore, the trip finger is propelled bodily forwardly with the latching element, beneath the pin 84, and since the upper edge portions of the trip finger flanges are recessed as at 87, the finger will also swing upwardly in a clockwise direction relative to the latching element, under the influence of the torsion spring 85, the vertical distance necessary to bring its forward extremity into horizontal alignment with the hook-shaped keeper 19 on the door.

Upon closing of the door, therefore, the keeper will strike the trip finger and impart counterclockwise rocking motion to the latching element an extent sufficient to carry its cam follower 65 rearwardly out of the lower "dead" end 71 of the cam slot to thereafter allow the relatively strong tension spring 57 to quickly snap the two armatures open to their retracted positions and to cam the latching element 20 in the counterclockwise direction to its latching position.

During such counterclockwise rocking of the latching element, of course, it will be noted that the trip finger 81 is cammed downwardly about its pivot 82 by the cross pin 84 on the mounting bracket, so as to clear the rear extremity of the keeper 19.

With the cooperating cam elements on the latching element 20 and the lower armature in their positions seen in Figure 4 at which they releasably hold the latching element in its unlatching position, it will be noted that the cam follower is in engagement with the rubber cushion 79' embedded in the lower armature and projecting slightly into the portion 71 of the cam slot. Thus, during travel of the cam follower into the front end section 71 of the slot, the cushion 79' prevents the follower from striking the extremity of the slot and further assures quiet operation of the mechanism.

In the cocked position of the mechanism seen in Figure 4 the surface 86 of the cam slot which is engaged by the cam follower need not be truly concentric to the pivot 63 for the upper armature but may recede somewhat from the nose 87 constituting the "high" of the cam slot. This would produce a detent effect which would be more or less pronounced depending upon the amount of recession of the surface 86, and would provide greater assurance against accidental release of the latching element 20 from its unlatching position. As shown, however, the surface 86 can be truly concentric to the pivot axis of the latching element, in the cocked position, without danger of having the mechanism accidentally snap back to its latching condition, for there will always be sufficient friction between the cam follower and the surface 86 of the cam slot as to releasably maintain the latching element 20 in its unlatching position. In this latter event, though a definite force must be applied to the trip finger to trip the mechanism out of its cocked or unlatching condition, this force is relatively light. It need only be great enough to overcome the force of the light tension spring 80 and the friction between the cooperating cam elements during the short travel of the cam follower necessary to carry it off of the concentric surface 86 of the slot and onto the adjacent surface of the nose 87, whereupon the tension spring 57 takes over and snaps the latching mechanism to its operative latching position.

Thus, it will be seen that the tripping characteristics of the mechanism may be predetermined merely by varying the relationship between the surface 86 of the cam slot and the pivot 63 for the upper armature, even to the point of having the surface 86 slope slightly away from the pivot 63 wherever hair trigger tripping is desired.

It is one of the features of this invention that the electromagnet is energized only momentarily to effect unlatching and cocking of the latch mechanism concomitantly with loading or energization of the relatively strong spring 57. As soon as the spring is fully energized and the latch mechanism is releasably held in its cocked position with the latch bolt fully disengaged from the keeper, the coil of the electromagnet is de-energized and remains de-energized as long as the door is open.

Energization of the electromagnet is effected, as stated previously, by partial depression of a plunger 16 by means of a push botton 17 on the door accessible at its exterior. The plunger 16 is slidably guided for endwise horizontal motion in a bracket 88 secured to the front edge portion of the cabinet wall 10, and has its rear portion pivotally connected as at 89 to a bell crank lever 90. The lever 90 is mounted for up and down rocking motion on a pin 91 carried by a second bracket 92 attached to the bracket 88, the pivot pin 91 being located a short distance beneath the pivotal connection 89 between push button and the lever.

A torsion spring 93 coiled about the pivot pin 91 and reacting between the lever and the bracket 92 yieldingly biases the lever in a counterclockwise or downward direction of rotation with a force such as to press down the actuator 95 of a single pole single throw snap switch 96 governing energization of the coil 32, the switch being thus normally maintained in an open position and the coil 32 de-energized. When the plunger 16 is depressed a short distance to its position shown in solid lines in Figure 6, the bell crank lever is rocked clockwise or upwardly about its pivot 91 the short arcuate distance necessary to relieve the pressure on the actuator 95 of the switch and allow the switch to close under the force of yielding biasing means, not shown.

Such closure of the switch 96 effects energization of the coil 32 in the manner shown in the Figure 9 diagram, and the latching element 20 is snapped to its unlatching position seen in Figure 4. At the time the latching element reaches its unlatching position, it effects de-energization of the coil 32 through the depression of an actuator 98 for a single pole double throw snap switch 99 by a spring finger 100 mounted on the front portion of the latching element 20.

The contactor 101 of the switch 99 is normally yieldingly biased into engagement with a stationary contact 102 of the switch, and such actuation of the switch by the spring finger 100 snaps the switch to carry its contactor 101 out of engagement with the contact 102 and into engagement with a second stationary contact 103 of the switch.

Again referring to the Figure 9 diagram it will be noted that with the contactor 101 normally engaged with the stationary contact 102, closure of the manually operated switch 96 effects energization of the coil 32 to cause the two armatures to travel to their attracted positions and the latching element to be swung to its cocked, unlatching position. When the latching element 20 reaches its unlatching position, however, it actuates the switch 99, disengaging the contactor 101 thereof from the contact 102 to thus de-energize the coil 32 of the electromagnet, and engaging the contact 101 with the stationary contact 103 to complete an energizing circuit for the interior light 105 of the refrigerator.

In this manner the interior light of the refrigerator will be energized as long as the refrigerator door is open. The energizing circuit for the interior light is broken, of course, at the time that closure of the refrigerator door trips the latching element out of its latching position and allows the contactor 101 of the switch 99 to be re-engaged

with the contact **102** under the force of the biasing means acting upon the contactor.

For the sake of simplicity the Figure 9 diagram shows the switch **99** operated directly by a portion of the core means for the electromagnet, rather than through the latching element **20**.

Attention is also directed to the fact that the switch **99** is secured to the mounting bracket **25** in any convenient manner to have its actuator **98** project downwardly and rearwardly toward the latching element for operation by the spring finger **100** thereon.

The switches **96** and **99** are disclosed and claimed in my copending application Serial No. 372,862, filed August 7, 1953, and their specific construction forms no part of the present invention.

In the event the latch mechanism cannot be operated electromagnetically by partial depression of the plunger **16** due to current failure or for any other reason, the latch bolt **21** may be manually disengaged from the keeper **19** merely by further depression of the plunger **16** by the push button **17** on the door. Manual release mechanism **107** is provided for this purpose to interlink the plunger **16** with the latch bolt through the bell crank lever **90**.

The release mechanism **107** comprises a vertically movable slide **109** at the front of the mounting bracket **25**, and a link **110** connected between the upper end of the slide **109** and with the bell crank lever **90** by a lost motion connection afforded by an arm **111** on the lever received in a vertically elongated slot **112** in the upper end of the link.

The slide **109** comprises a pair of arms **114** the lower portions of which flatwise embrace the opposite legs of the mounting bracket **25**. The arms **114** are joined by an integral cross bar **115** at their upper ends, and an integral upwardly extending stem **116** projects from the cross bar for connection with the lower end of the link **110**. For this purpose the upper end of the stem has a transverse slot **117** therein in which an offset portion **118** on the lower end of the link **110** is engaged to provide a driving connection between the link and the slide.

At their lower extremities the opposite arms **114** have flanges **120** struck inwardly toward one another from their rear edges and received in vertical slots **121** in the opposite legs **27** of the mounting bracket to guide the lower end of the slide for up and down motion. The upper end of the slide is guided for such up and down motion by having its stem **116** pass through a slot **122** in the upper mounting clip **24** for the latch mechanism.

Referring to Figure 3 it will be noted that the flanges **120** on the lower ends of the arms of the slide project under the arm **73** which carries the latch bolt, so that the latter will be carried upwardly about the pivot **74** whenever the slide is lifted.

Consequently, if the electromagnetic operator fails to unlatch the mechanism upon completion of the short inward stroke of the plunger **16**, the push button is depressed further to carry the plunger toward its position shown in Figure 7, taking up the lost motion in the connection between the bell crank lever and the upper end of the link **110**, and moving the link and slide upwardly to thereby lift the latch bolt out of its keeper engaging position as indicated in construction lines in Figure 3. It is important to note that such manual release of the door for opening is effected by moving the latch bolt relative to the latching element **20**, entirely independently of the electromagnet. In other words, the manual release of the latch bolt does not entail manual moving of the two armatures toward attracted positions against the force of the relatively strong tension spring **57**. This is highly advantageous from the standpoint of easy manual release of the latch bolt, and in this connection it is noteworthy that the relationship of the pivot for the latch bolt to the upright forwardly facing surface of the keeper which is engaged by the bolt roller is such that during manual release of the latch the bolt travels substantially upwardly in the plane of said surface without interference from the heavy spring **57**.

The manual release mechanism herein provided also has the advantage that it allows the combined electrical and manual control mechanism **15** to be mounted at whatever elevation on the refrigerator is necessary to align its plunger **16** with the push button or other actuating means provided on the refrigerator door. This, of course, means that shorter or longer links **110** may be provided to readily connect the manual control means **15** with the slide.

Inasmuch as it frequently occurs that the door of a refrigerator tends to sag after its hinges begin to wear, and that such sagging may prevent proper latching of the door in its closed position, it is a feature of this invention that means is provided to assure that the keeper **19** on the rear of the door will always reach a predetermined level with respect to the latch mechanism when the door is closed. For this purpose an arm **124** is pivotally supported on the cross pin **84**, beneath the trip finger **81**, the arm projecting forwardly and carrying a roller **125** at its outer end. The arm fits between the opposite legs **27** of the mounting bracket, and a relatively strong compression spring **126** confined between the underside of its extremity and a flange **127** on the mounting bracket urges the same upwardly to an operative position defined by the engagement of outwardly directed flanges **128** on the upper side of the arm with the upper edges **129** of opposite notches cut in the front edges of the mounting bracket legs. These flanges, in engaging the edges of the notches, so locate the roller **125** that the underside of the keeper **19** on the door is nearly tangent to the top of the roller.

Should the door sag at any time the keeper **19** will be caused to ride up onto the roller **125** during closure of the door to lift the door and keeper to the position effecting proper engagement between the keeper and the latch bolt. The compression spring **126**, of course, cushions any shock due to such collision between the keeper and the roller.

The electromagnetic operator shown in Figure 10 is on the order of that disclosed in Figures 3 and 4, but modified slightly to adapt it for general use. It also comprises a mounting bracket **25'** like that previously described, having a coil **32'** secured thereon; and geared together upper and lower armatures **45'** and **46'** respectively mounted on pivot pins **49'** and **52'** to swing their pole portions toward engagement with one another inside the coil in response to energization of the coil.

The operating link **20'** in this case also has a pivotal connection **63'** with the upper armature, and has a cam connection with the lower armature provided by the engagement of a cam follower **65'** on the link in an arcuate cam slot **68'** in the lower armature. It should be noted, however, that the shape of the cam slot has been shown more nearly concentric to a common center, whereas in the previous embodiment, the cam slot was comprised of an upper section nearly concentric with the pivot axis of the lower armature, and a lower section substantially concentric with the pivot axis of the operating link. In other words, the cam slot **68'** has substantially uniform curvature from its upper to its lower end, and its lower portion does not have the detent forming recession previously described to releasably hold the link and the armatures in cocked condition following energization of the coil. This allows the armatures and the operating link to be retracted by the load which may be connected to the link, without the need for tripping the link out of its cocked position, or for the spring previously employed to return the armatures and the link to retracted positions.

The operating link, in this case, may have opposite depending portions **131** provided with coaxial holes **132**, so

that it may be connected to a load to be either pushed or pulled by the electromagnet.

The electromagnetic operator shown in Figure 10 has all of the advantages of that previously described. The operating link 20' limits separation of the armatures upon de-energization of the coil, and for this purpose, a rubber bumper 56' mounted on a cross-bar 134 confined between the legs of the link and having its ends anchored thereto, is engaged by the lower armature during separation of the armatures to define their retracted positions.

The operating link, acting through the cam connection, not only controls the speed with which the armatures swing on their axes, causing deceleration of the armatures as they approach their attracted positions by the movement of the cam roller 65' into the lower portion of the cam slot, but also actually limits the attracting motion of the armatures by the engagement of the roller 65' with the lower end of the cam slot. This assures extremely quiet operation of the electromagnetic operator.

From the foregoing description taken together with the accompanying drawings it will be readily apparent to those skilled in the art that this invention provides an exceptionally efficient latch mechanism particularly suited for electromagnetic operation, and wherein the latching element is cammed both in the latching and unlatching directions; and that the provision of an electromagnet with a pair of pivoted armatures constrained to swing in unison and connected by an operating link which comprises the latching element of the mechanism affords exceptionally good control over the speed of motion of the armatures during both retraction and attraction thereof to assure exceptionally quiet operation of the latching mechanism.

What I claim as my invention is:

1. Latch mechanism of the type wherein movement of a latching element from latching to unlatching position is effected in consequence of movement of core means for an electromagnet from retracted to attracted position in response to energization of the electromagnet: characterized by the fact that said core means comprises two armatures movable in opposite directions toward one another in response to energization of the electromagnet; a pivotal connection between the latching element and one of said armatures whereby the latching element moves bodily with said one armature but is capable of rocking motion relative thereto; and cam means on the other of said armatures operable upon the latching element during bodily motion thereof with the first designated armature toward attracted position, for rocking the latching element in the unlatching direction relative to said first designated armature.

2. The latch mechanism set forth in claim 1 further characterized by the fact that said cam means effects camming of the latching element back and forth between its latching and unlatching positions during bodily motion of the latching element with the first designated armature as the latter moves back and forth between its retracted and attracted positions.

3. The latch mechanism set forth in claim 1 further characterized by the provision of means constraining the two armatures to move in unison toward and from one another.

4. The latch mechanism set forth in claim 3 further characterized by the provision of a relatively strong spring connected to one of said armatures to yieldingly resist motion of the armatures toward one another in their attraction strokes, said spring acting on the latching element through said cam means to exert a substantial force on the latching element holding it in its latching position.

5. In latch mechanism of the type wherein movement of a latching element from latching to unlatching positions is effected in consequence of movement of actuating means from one limit of motion to another: a cam surface on said actuating means engaged by the latching element for camming the latching element out of its latching position during motion of the actuating means from said one limit of motion thereof to the other; a latch bolt carried by the latching element to move therewith between a keeper engaging and a keeper releasing position; means pivotally supporting the latching element for swinging motion about an axis remote from the bolt and so that the bolt travels in a defined path between its keeper engaging and releasing positions during bodily motion of the bolt with the latching element; and a pivotal connection between the bolt and the latching element providing for rocking motion of the bolt relative to the latching element along a path substantially crosswise of said first designated path, to enable the bolt to be moved relative to the latching element out of its keeper engaging position independently of the actuating means.

6. In a door latch mechanism of the type wherein movement of a latching element from latching to unlatching position to disengage a latch bolt thereon from a keeper provides for relative separating motion between the keeper and the latching element to thus free the door for opening: means mounting the latching element for rocking motion between latching and unlatching positions; actuating means connected to the latching element for imparting such rocking motion thereto, said actuating means including spring means for effecting return of the latching element to latching position; cooperating means on the latching element and the actuating means brought into interengaging relationship as a consequence of rocking of the latching element to its unlatching position by the actuating means for releasably holding the latching element against spring biased return to its latching position; and a trip finger mounted on the latching element near the latch bolt to be carried by the latching element substantially into the position vacated by the latch bolt upon rocking of the latching element to unlaching position, whereby the trip finger and the keeper will be brought into engagement with one another as a consequence of closure of the door to effect disengagement of said cooperating means on the latching element and the actuating means and release of the latching element for spring propelled return to its latching position.

7. In latch mechanism of the type wherein movement of a latch bolt from latching to unlatching position is effected in consequence of energization of an electromagnetic operator for the latch mechanism: core means for the electromagnetic operator comprising two cooperating armatures separately mounted for pivotal motion about spaced parallel axes and to swing toward one another in response to energization of the electromagnet; an operating link pivotally mounted on one of said armatures so as to be moved bodily thereby and to be capable of rocking motion relative to said one armature; means providing a motion transmitting connection between the other armature and said operating link for translating bodily motion of the link with said one armature, during swinging of the armatures toward one another, into rocking of the link in one direction about its pivotal mounting on said one armature; and means mounting the latch bolt on said operating link so that the latch bolt will be carried out of its keeper engaging position thereby during rocking of the operating link in said direction.

8. The latch mechanism set forth in claim 7 further characterized by the fact that said armatures are connected together to move in unison toward and from one another.

9. In latch mechanism of the type wherein movement of a latch bolt from latching to unlatching position is effected in consequence of energization of an electromagnetic operator for the latch mechanism; core means for the electromagnetic operator comprising two cooperating armatures separately mounted for pivotal motion about spaced parallel axes and to swing toward one another to attracted positions in response to energization of the electromagnet; an operating link pivotally mounted on one of said armatures to move bodily therewith and to be capable of rocking motion relative thereto; means

providing a motion transmitting connection between the other armature and the operating link for translating bodily motion of the link with said one armature, during swinging of the armatures toward one another, into rocking of the link in one direction about its pivotal mounting on said one armature, said motion transmitting connection including cooperating means on the operating link and said other armature interengaged with one another during swinging of the armatures to attracted positions for decelerating the relative motion of the armatures as they approach their attracted positions; and means mounting the latch bolt on said operating link so that the latch bolt will be carried out of its keeper engaging position thereby during rocking of the operating link in said direction.

10. The latch mechanism set forth in claim 9 wherein said cooperating means comprises a substantially arcuate cam slot in said other armature, and a cam follower on the operating link engaged in said slot.

11. Electromagnetically operated door latch mechanism comprising: an annular coil; a pair of armatures separately pivoted to swing between attracted and retracted positions about spaced apart axes exteriorly of the coil adjacent to one side thereof and crosswise of the coil axis; pole portions on the armatures extending around the opposite ends of the coil and projecting toward one another into the interior of the coil, said pole portions substantially meeting one another inside the coil upon swinging of the armatures to their attracted positions; means constraining the armatures to swing in unison toward and from one another; an opertaing link pivotally mounted on one of said armatures for bodily motion therewith and for rocking motion relative thereto about an axis alongside one end of the coil; means providing a motion transmitting connection between the operating link and the other armature adjacent to the opposite end of the coil, for translating bodily motion of the link with said one armature during swinging of the armatures toward attracted positions into rocking of the link in one direction about its pivotal mounting on said one armature; and a latch bolt mounted on a portion of the operating link remote from its pivot so as to be carried by the link from a keeper engaging to a keeper releasing position during such rocking of the operating link in one direction.

12. An electromagnetic operator of the character described, comprising: an annular coil; a pair of armatures separately pivoted to swing between attracted and retracted positions about spaced axes fixed with respect to the coil, crosswise of the coil axis, and adjacent to one side of the coil at its exterior; pole portions on the armatures extending around the opposite ends of the coil and projecting toward one another into the interior of the coil, said pole portions having faces which substantially meet one another inside the coil upon swinging of the armatures to their attracted positions; means constraining the armatures to swing in unison toward and from one another; an operating link pivotally mounted on one of said armatures for bodily motion therewith and for rocking motion relative thereto about an axis spaced from the pivot axis of said one armature; and means providing a motion transmitting connection between the operating link and the other armature at a location remote from said pivotal connection between the link and said one armature for translating bodily motion of the link with said one armature, during swinging of the armatures toward attracted positions, into rocking of the link in one direction about its pivotal mounting on said one armature to thus produce the working stroke of the operating link, and whereby the path travelled by the link in its working stroke is determined solely but conjointly by said armatures.

13. The electromagnetic operator set forth in claim 12 wherein said means providing the motion transmitting connection between the operating link and said other armature comprises an arcuate cam slot in said other armature having an inner portion nearly concentric to the pivot axis of said other armature, and having an outer portion remote from the pole face on said other armature and substantially concentric to the pivot axis of the operating link.

14. The electromagnetic operator set forth in claim 13 further characterized by the provision of stop means on the operating link engaged by one of said armatures to define the retracted positions of the armatures.

15. In an electromagnetic operator: an annular coil; a pair of armatures having pole portions adjacent to the opposite ends of the coil; means mounting the armatures for pivotal motion about spaced axes fixed with respect to the coil, crosswise of the axis of the coil and adjacent to one side of the coil at its exterior, so that said armatures may swing in opposite directions in their attraction stroke to carry their pole portions toward one another; an operating link pivotally mounted on one of said armatures for bodily motion therewith and for rocking motion relative thereto about an axis spaced from the pivot axis of said one armature; and means providing a motion transmitting connection between the other of said armatures and a portion of the operating link remote from the pivot axis of the latter for translating motion of the armatures in their attraction strokes into rocking of the operating link in one direction relative to said one armature to produce the working stroke of the link, and whereby the path travelled by the link in its working stroke is determined solely but conjointly by said armatures.

16. The electromagnetic operator set forth in claim 15 wherein said last named means comprises interconnected elements on the link and said other armature interengaging with one another to effect acceleration of the rocking motion of the link during attraction of the armatures.

17. In an electromagnetically releasable latch mechanism of the type having a latching element movable from latching to unlatching positions in consequence of energization of the electromagnet: a latch bolt mounted on the latching element for bodily motion therewith between keeper engaging and keeper releasing positions, and for motion relative to the latching element to enable the latch bolt to be moved to a keeper releasing position independently of the latching element; means for effecting energization of the electromagnet comprising a switch, and actuating means for the switch remote from the latch bolt and including a manually movable member having a portion movable in a direction away from the latch bolt, from one position to another, to effect closure of said switch and energization of the electromagnet; elongated link means extending lengthwise between the latch bolt and said portion of the manually movable member and biased toward the latch bolt; cooperating means on the latch bolt and the link means providing a motion transmitting connection therebetween through which endwise motion of the link means toward said manually movable member moves the latch bolt relative to the latching element to a keeper releasing position; and means providing a lost motion driving connection between said portion of the manually movable member and the link means requiring manually produced motion of said portion of the movable member in said direction away from the latch bolt a distance beyond said other position of said portion to effect manual release of the latch bolt.

18. In an electromagnetic operator; a mounting bracket; an annular coil carried by the mounting bracket; core means for the electromagnet including a movable core part adjacent to one end of the coil; means pivotally mounting said movable core part on the mounting bracket for swinging motion toward and from an attracted position with respect to the coil; an elongated operating link connectable with a load to be moved by the electromagnetic operator, said link being adjacent to one side of the coil and extending lengthwise in the direction of the coil axis; means pivotally mounting one end portion of the link on said movable core part for bodily motion of the link therewith and for rocking motion relative thereto; a cam fol-

lower on the link remote from the pivot axis of the link; and means on the mounting bracket providing a cam slot in which said cam follower rides, for translating bodily motion of the link with said core part during the attraction stroke of the latter into rocking motion of the link relative to said core part in a direction to carry the other end portion of the link away from the adjacent side of the coil, to thus produce the working stroke of the link.

19. The electromagnetic operator set forth in claim 18 further characterized by the provision of a stop on the operating link engageable with the core means to define the retracted position of the movable core part.

20. In an electromagnetically operated latch mechanism of the type having a core member which moves from a retracted to an attracted position in response to energization of the electromagnet: an elongated latch member having one end portion adjacent to said core member and its opposite end portion remote therefrom; means pivotally supporting said latch member for swinging motion between an operative keeper engaging position and an inoperative keeper releasing position; and cooperating means on the adjacent portions of said members providing a motion transmitting connection therebetween for translating motion of the core member in its attraction stroke into swinging of the latch member toward its inoperative position, said cooperating means comprising a cam follower on one of said members, and a cam slot in the other of said members in which the cam follower rides.

21. An electromagnetically operated latch mechanism comprising: an annular coil; a pair of movable core members constrained to move in unison and having pole portions which travel into the opposite ends of the coil toward one another in response to energization of the coil; an elongated latch member having a latch bolt thereon, said latch member being movable between an operative keeper engaging position and an inoperative keeper releasing position; means pivotally mounting one end portion of the latch member on one of said core members so as to constrain the latch member to bodily motion therewith and to provide for rocking motion of the latch member relative thereto; cooperating means on the opposite end portion of the latch member and the other of said core members providing a motion transmitting connection therebetween for translating bodily motion of the latch member with said one core member, during response of said core members to energization of the coil, into rocking of the latch member relative to said one core member to its inoperative position; cooperating stops on the latch member and one of said core members for defining the retracted positions of said core members; and other cooperating stops on the latch member and one of said core members for defining the inoperative position of the latch member and for limiting travel of said pole portions of the core members into the opposite ends of the coil.

22. In a latch mechanism of the type wherein movement of a latch bolt from latching to unlatching positions is effected as a consequence of movement of actuating means from one limit of motion to another: a link; means pivotally joining the link to the actuating means to constrain the link to move bodily with the actuating means but to provide for swinging motion of the link relative thereto; means mounting the latch bolt on the link for bodily motion therewith; and cam means forming part of the latch mechanism and acting upon the link during bodily motion thereof with the actuating means as the latter moves from said one limit of motion to the other for positively imparting swinging motion to the link relative to the actuating means in the direction to carry the latch bolt on the link toward its unlatching position.

23. Door latch mechanism of the type wherein movement of a latch bolt from latching to unlatching positions releases the door for opening and is effected as a consequence of movement of core means for an electromagnet from retracted to attracted positions in response to energization of the electromagnet: characterized by the provision of a link pivotally carried by the core means for bodily motion therewith and for swinging motion relative thereto, and means mounting the latch bolt on the link for bodily motion therewith so that the link provides the sole support for the latch bolt; and further characterized by the provision of cam means acting upon said link during bodily motion thereof with the core means as the latter travels toward attracted position for imparting swinging motion to the link relative to the core means in the direction to carry the latch bolt on the link toward its unlatching position.

24. In a door latch of the type wherein movement of a latch bolt from latching to unlatching positions releases the door for opening and is effected as a consequence of movement of a core element for an electromagnet from retracted to attracted positions in response to energization of the electromagnet: a link: means mounting the latch bolt on the link so that the link provides the sole support for the latch bolt; means pivotally supporting the link for swinging motion in directions to carry the latch bolt thereon between an operative keeper engaging position and an inoperative keeper releasing position: a cam member connected with said core element to be moved back and forth thereby in consequence of motion of the core element between attracted and retracted positions; and a cam connection between said cam member and the link operable upon motion of the core element toward attracted position to impart swinging motion to the link in the direction to carry the latch bolt thereon toward its keeper releasing position.

References Cited in the file of this patent

UNITED STATES PATENTS

851,663	Jackson	Apr. 30, 1907
1,319,855	Donop	Oct. 28, 1919
2,219,132	Hohmann et al.	Oct. 22, 1940
2,293,700	Curtiss	Aug. 25, 1942
2,325,225	Burke	July 27, 1943
2,353,377	Vaughn	July 11, 1944
2,451,380	Curtiss	Oct. 12, 1948
2,606,052	Soreng et al.	Aug. 5, 1952