(12) INTERNATIONAL APPLICATION PUBLISHED UNDER THE PATENT COOPERATION TREATY (PCT)

(19) World Intellectual Property Organization
International Bureau

(43) International Publication Date
20 August 2020 (20.08.2020)

WIPO | PCT

(10) International Publication Number
WO 2020/164751 A1

(51) International Patent Classification:
G10L 19/005 (2013.01) *G10L 19/02* (2013.01)
H04L 1/00 (2006.01)

(21) International Application Number:
PCT/EP2019/065172

(22) International Filing Date:
11 June 2019 (11.06.2019)

(25) Filing Language: English

(26) Publication Language: English

(30) Priority Data:

19156997.9	13 February 2019 (13.02.2019)	EP
19157036.5	13 February 2019 (13.02.2019)	EP
19157042.3	13 February 2019 (13.02.2019)	EP
19157047.2	13 February 2019 (13.02.2019)	EP

(71) Applicant: **FRAUNHOFER-GESELLSCHAFT ZUR FÖRDERUNG DER ANGEWANDTEN FORSCHUNG E.V.** [DE/DE]; Hansastraße 27c, 80686 München (DE).

(72) Inventors: **TOMASEK, Adrian**; c/o Fraunhofer-Institut für Integrierte Schaltungen IIS, Am Wolfsmantel 33, 91058 Erlangen (DE). **SPERSCHNEIDER, Ralph**; c/o Fraunhofer-Institut für Integrierte Schaltungen IIS, Am Wolfsmantel 33, 91058 Erlangen (DE). **BÜTHE, Jan**; c/o Fraunhofer-Institut für Integrierte Schaltungen IIS, Am Wolfsmantel 33, 91058 Erlangen (DE). **BENNDORF, Conrad**; c/o Fraunhofer-Institut für Integrierte Schaltungen IIS, Am Wolfsmantel 33, 91058 Erlangen (DE). **DIETZ, Martin**; c/o Fraunhofer-Institut für Integrierte Schaltungen IIS, Am Wolfsmantel 33, 91058 Erlangen (DE). **SCHNELL, Markus**; c/o Fraunhofer-Institut für Integrierte Schaltungen IIS, Am Wolfsmantel 33, 91058 Erlangen (DE). **SCHLEGEL, Maximilian**; c/o Fraunhofer-Institut für Integri-

(54) Title: DECODER AND DECODING METHOD FOR LC3 CONCEALMENT INCLUDING FULL FRAME LOSS CONCEALMENT AND PARTIAL FRAME LOSS CONCEALMENT

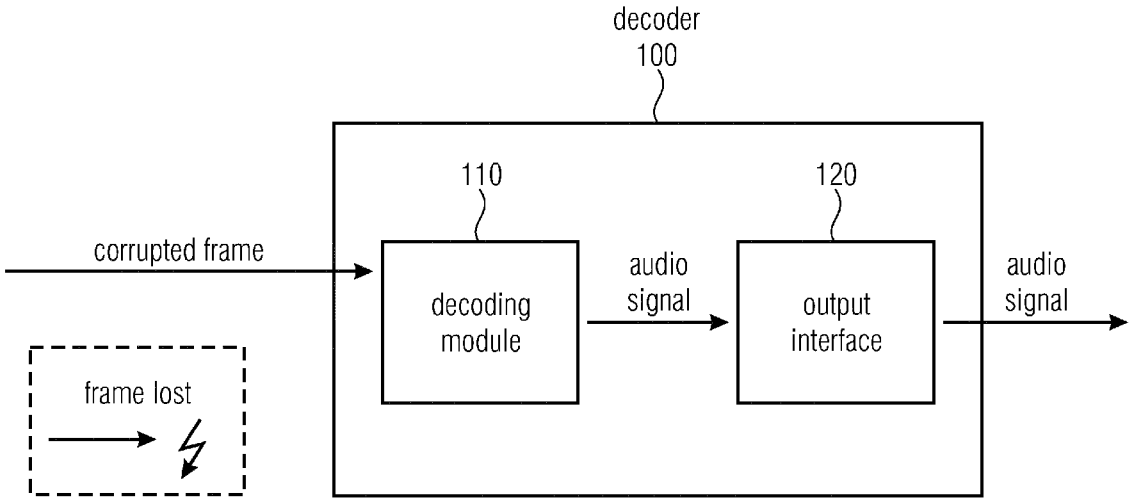

Fig. 1

(57) Abstract: Fig. 1 illustrates a decoder (100) for decoding a current frame to reconstruct an audio signal according to an embodiment. The audio signal is encoded within the current frame. The current frame comprises a current bitstream payload. The current bitstream payload comprises a plurality of payload bits. The plurality of payload bits encodes a plurality of spectral lines of a spectrum of the audio signal. Each of the payload bits exhibits a position within the current bitstream payload. The decoder (100) comprises a decoding module (110) and an output interface (120). The decoding module (110) is configured to reconstruct the audio signal. The output interface (120) is configured to output the audio signal. The decoding module (110) comprises an error concealment mode, wherein, if the decoding module (110) is in said error concealment mode, the decoding module (110) is configured to reconstruct the audio signal

WO 2020/164751 A1

[Continued on next page]

erte Schaltungen IIS, Am Wolfsmantel 33, 91058 Erlangen (DE).

(74) **Agent: SCHAIRER, Oliver** et al.; Schoppe, Zimmermann, Stöckeler, Zinkler, Schenk & Partner mbB, Radlkoferstr. 2, 81373 Müchen (DE).

(81) **Designated States** *(unless otherwise indicated, for every kind of national protection available)*: AE, AG, AL, AM, AO, AT, AU, AZ, BA, BB, BG, BH, BN, BR, BW, BY, BZ, CA, CH, CL, CN, CO, CR, CU, CZ, DE, DJ, DK, DM, DO, DZ, EC, EE, EG, ES, FI, GB, GD, GE, GH, GM, GT, HN, HR, HU, ID, IL, IN, IR, IS, JO, JP, KE, KG, KH, KN, KP, KR, KW, KZ, LA, LC, LK, LR, LS, LU, LY, MA, MD, ME, MG, MK, MN, MW, MX, MY, MZ, NA, NG, NI, NO, NZ, OM, PA, PE, PG, PH, PL, PT, QA, RO, RS, RU, RW, SA, SC, SD, SE, SG, SK, SL, SM, ST, SV, SY, TH, TJ, TM, TN, TR, TT, TZ, UA, UG, US, UZ, VC, VN, ZA, ZM, ZW.

(84) **Designated States** *(unless otherwise indicated, for every kind of regional protection available)*: ARIPO (BW, GH, GM, KE, LR, LS, MW, MZ, NA, RW, SD, SL, ST, SZ, TZ, UG, ZM, ZW), Eurasian (AM, AZ, BY, KG, KZ, RU, TJ, TM), European (AL, AT, BE, BG, CH, CY, CZ, DE, DK, EE, ES, FI, FR, GB, GR, HR, HU, IE, IS, IT, LT, LU, LV, MC, MK, MT, NL, NO, PL, PT, RO, RS, SE, SI, SK, SM, TR), OAPI (BF, BJ, CF, CG, CI, CM, GA, GN, GQ, GW, KM, ML, MR, NE, SN, TD, TG).

Published:

— *with international search report (Art. 21(3))*

by conducting error concealment for those spectral lines of the spectrum of the audio signal, which exhibit a frequency being greater than a threshold frequency. And/or, if error concealment is conducted by the decoding module (110), the decoding module (110) is configured to conduct error concealment in a way that depends on whether or not a previous bitstream payload of a previous frame preceding the current frame encodes a signal component of the audio signal which is tonal or harmonic.

Decoder and Decoding Method for LC3 Concealment including Full Frame Loss Concealment and Partial Frame Loss Concealment

Description

The present invention relates to a decoder and a decoding method for LC3 frame loss concealment including full frame loss concealment and partial frame loss concealment.

Transform based audio codecs rely on coded representations of spectra of audio frames. Such spectra consist of a plurality of spectral lines. Due to various reasons, either some or even all spectral lines may not be available on a decoder side. Audio error concealment concepts in the frequency domain may, e.g., provide means to mitigate artefacts caused by such missing spectral lines. A common approach is, to find as good as possible replacements for them.

In the prior art, various frame loss concealment techniques are available.

Frame loss concealment concepts in the frequency domain are, e.g., discussed in [1], where, in particular, muting, repetition, noise substitution and prediction are mentioned. Those techniques are always combined with a fade-out process, which fades the signal – usually over several lost frames – towards either zero or towards some sort of background noise/comfort noise.

In [2], different attenuation factors for frequency bands are proposed depending on the energy in those bands: A larger attenuation factor may, e.g., be applied for bands with an energy higher than a threshold, and a smaller attenuation factor might be applied for bands with an energy below that threshold. Moreover, in [2], the energy progression over the last good frames is observed, and a stronger attenuation is applied, if the energy in the last good frame was smaller than in the last but one good frame.

Furthermore, the spectral shape of the signal might also be faded towards some sort of common shape. This approach is used in particular in linear predictive coding (LPC) based codecs, e.g. EVS (enhanced voice services), where the LPC coefficients are blended towards some provided mean coefficients.

The object of the present invention is to provide improved concepts for error concealment. The object of the present invention is solved by a decoder according to claim 1, by a method according to claim 39 and by a computer program according to claim 40.

A decoder for decoding a current frame to reconstruct an audio signal is provided. The audio signal is encoded within the current frame. The current frame comprises a current bitstream payload. The current bitstream payload comprises a plurality of payload bits. The plurality of payload bits encodes a plurality of spectral lines of a spectrum of the audio signal. Each of the payload bits exhibits a position within the current bitstream payload. The decoder comprises a decoding module and an output interface. The decoding module is configured to reconstruct the audio signal. The output interface is configured to output the audio signal. The decoding module comprises an error concealment mode, wherein, if the decoding module is in said error concealment mode, the decoding module is configured to reconstruct the audio signal by conducting error concealment for those spectral lines of the spectrum of the audio signal, which exhibit a frequency being greater than a threshold frequency. And/or, if error concealment is conducted by the decoding module, the decoding module is configured to conduct error concealment in a way that depends on whether or not a previous bitstream payload of a previous frame preceding the current frame encodes a signal component of the audio signal which is tonal or harmonic.

Moreover, a method for decoding a current frame to reconstruct an audio signal is provided. The audio signal is encoded within the current frame, wherein the current frame comprises a current bitstream payload, wherein the current bitstream payload comprises a plurality of payload bits. The plurality of payload bits encodes a plurality of spectral lines of a spectrum of the audio signal. Each of the payload bits exhibits a position within the current bitstream payload. The method comprises:

- Reconstructing the audio signal, wherein, in an error concealment mode, reconstructing the audio signal is conducted by conducting error concealment for those spectral lines of the spectrum of the audio signal, which exhibit a frequency being greater than a threshold frequency; and/or, if error concealment is conducted, error concealment is conducted in a way that depends on whether or not a previous bitstream payload of a previous frame preceding the current frame encodes a signal component of the audio signal which is tonal or harmonic; and

- Outputting the audio signal.

Furthermore, a computer program for implementing the above-described method when being executed on a computer or signal processor is provided.

In some circumstances, error concealment concepts may, e.g., be be applied to the whole frame, e.g. if the whole frame is lost or marked as invalid, or – even if parts of the spectrum are available – if full frame loss concealment is considered to be the best possible error concealment strategy.

In other circumstances, however, error concealment techniques may, e.g., be applied to just a part of the frame, if parts of the spectrum are available.

Circumstances, where parts of the spectrum are available, may, for example, occur in scalable coding, e.g. AAC scalable, AAC SLS or BSAC, where some layers are received, but others are not received (AAC = advanced audio coding, SLS = scalable to lossless, BSAC = bit sliced arithmetic coding).

Or, parts of the spectrum may, e.g., be available in redundant frame coding, where a redundant low quality copy of the lost frame is available, i.e. in the context of VoIP or VoLTE (see, e.g., [3] and [4] for more information on robustness and error resilience in VoIP and VoLTE; VoIP = voice over IP/ voice over internet protocol; VoLTE = voice over LTE/ voice over long term evolution).

Or, parts of the spectrum may, e.g., be available when selective error detection is conducted, e.g. in AAC with RVLC (reversible variable length coding) for the scale factor data, where certain scale factors might be detected to be corrupt, leading to a certain number of corrupt spectra lines; or, e.g., in LC3 for DECT (digital enhanced cordless telecommunications), where errors in the coded representation of parts of the spectrum (representing the psychoacoustically less important spectral range) can be separately detected.

In the following, embodiments of the present invention are described in more detail with reference to the figures, in which:

Fig. 1 illustrates a decoder for decoding a current frame to reconstruct an audio signal portion of an audio signal according to an embodiment.

Fig. 2 illustrates a decoding module according to a particular embodiment.

Fig. 3 illustrates a decoding module overview according to an embodiment for clean channel decoding.

Fig. 4 illustrates a decoding module overview according to an embodiment for full frame loss concealment.

Fig. 5 illustrates a decoding module overview according to an embodiment for partial frame loss concealment.

Fig. 6 illustrates a fading function according to an embodiment which depends on a number of lost frames in a row, and which further depends on a frame length.

Fig. 7 illustrates a threshold for sign scrambling according to an embodiment, which depends on a number of lost frames in a row and which further depends on a frame length.

Fig. 8 illustrates an energy threshold factor according to an embodiment, which depends on a number of lost frames in a row and which further depends on a frame length.

Fig. 9 illustrates a non-linear attenuation according to an embodiment, which depends on a number of lost frames in a row.

Fig. 1 illustrates a decoder 100 for decoding a current frame to reconstruct an audio signal according to an embodiment.

The audio signal is encoded within the current frame. The current frame comprises a current bitstream payload. The current bitstream payload comprises a plurality of payload bits. The plurality of payload bits encodes a plurality of spectral lines of a spectrum of the audio signal. Each of the payload bits exhibits a position within the current bitstream payload.

The decoder 100 comprises a decoding module 110 and an output interface 120.

The decoding module 110 is configured to reconstruct the audio signal.

The output interface 120 is configured to output the audio signal.

The decoding module 110 comprises an error concealment mode, wherein, if the decoding module 110 is in said error concealment mode, the decoding module 110 is configured to

reconstruct the audio signal by conducting error concealment for those spectral lines of the spectrum of the audio signal, which exhibit a frequency being greater than a threshold frequency.

And/or, if error concealment is conducted by the decoding module 110, the decoding module 110 is configured to conduct error concealment in a way that depends on whether or not a previous bitstream payload of a previous frame preceding the current frame encodes a signal component of the audio signal which is tonal or harmonic.

In some embodiments, the decoding module may, e.g., be in said error concealment mode, if the current bitstream payload of the current frame comprises uncorrectable errors and/or if the current frame is lost. The current bitstream payload may, e.g., comprise uncorrectable errors, if an error still exists after error correction has been conducted by the decoder 100; or, if the current bitstream payload comprises an error and no error correction is conducted at all. A frame comprising uncorrectable errors may, e.g., be referred to as a corrupted frame.

For example, according to an embodiment, particular error concealment parameters may, e.g., be configured depending on whether or not said previous bitstream payload of said previous frame preceding the current frame encodes said signal component of the audio signal which is tonal or harmonic.

According to an embodiment, the previous frame may, e.g., be a last received frame which has been decoded by the decoding module 110 without conducting error concealment in the full frame loss concealment mode.

In the following, embodiments are described in more detail.

The spectrum may, e.g., be considered to be subdivided into those spectral lines, which are available and which shall be used, and those spectral lines, which are not available or which shall not be used (for example, although they may, e.g., be available).

According to some embodiments, one may, e.g., proceed as follows:

In some situations, all spectral lines are available and shall be used, and thus, no frame loss concealment may, e.g., be conducted.

In other situations, certain spectral lines are available and shall be used, and partial frame loss concealment may, e.g., be conducted on the missing spectral lines.

In yet other situations, no spectral lines are available or shall be used, and full frame loss concealment may, e.g., be conducted.

In the following, error concealment depending on tonality according to some embodiments is described.

In an embodiment, if error concealment is conducted by the decoding module 110, the decoding module 110 may, e.g., be configured to reconstruct a current spectrum of the audio signal by conducting error concealment using a plurality of signs of a previous spectrum of the audio signal, said plurality of signs being encoded within the previous frame, wherein the decoding module 110 may, e.g., be configured to conduct error concealment in a way that depends on whether or not said previous frame encodes a signal component which is tonal or harmonic. For example, parameters for error concealment may, e.g., be selected in a different way depending on whether or not signal component which is tonal or harmonic.

In an embodiment, said previous frame may, e.g., be a last received frame, which has been decoded by the decoding module 110 without conducting error concealment. Or, said previous frame may, e.g., be a last received frame, which has been decoded by the decoding module 110 without conducting error concealment in the full frame loss concealment mode. Or, said previous frame may, e.g., be a last received frame, which has been decoded by the decoding module 110 without conducting error concealment in the partial frame loss concealment mode or in the full frame loss concealment mode.

According to an embodiment, if error concealment is conducted by the decoding module 110, and if the previous bitstream payload of the previous frame encodes a signal component which is tonal or harmonic, the decoding module 110 may, e.g., be configured to flip one or more signs of the plurality of signs of the previous spectrum to reconstruct the current spectrum, wherein a percentage value p, indicating a probability for a sign of the plurality of signs of the previous spectrum to be flipped by the decoding module 110 to reconstruct the current spectrum, may, e.g., be between $0\ \% \leq p \leq 50\ \%$, wherein the decoding module 110 may, e.g., be configured to determine the percentage value p. In an embodiment, the decoding module 110 may, e.g., employ a sequence of pseudo random numbers to determine whether a considered sign of the previous spectrum shall actually be flipped or not depending on the percentage value p.

In an embodiment, the decoding module 110 may, e.g., be configured to increase the percentage value p depending on a number of subsequent frames. Said number of subsequent frames may, e.g., indicate for how many subsequently (partially or fully) lost frames error concealment has been conducted by the decoding module 110; or wherein said number of subsequent frames may, e.g., indicate for how many subsequent frames error concealment in a particular error concealment mode has been conducted by the decoding module 110.

In an embodiment, the decoding module 110 may, e.g., be configured to determine the percentage value p depending on a function which depends on said number of subsequent frames, said number of subsequent frames being an argument of said function.

According to an embodiment, the decoding module 110 may, e.g., be configured to determine the percentage value p, such that p is 0 %, if said number of subsequent frames is smaller than a first threshold value; such that $0\ \% \leq p \leq 50\ \%$, if said number of subsequent frames is greater than or equal to the first threshold value and smaller than a second threshold value, and such that $p = 50\ \%$, if said number of subsequent frames is greater than the second threshold value.

In an embodiment, the decoding module 110 may, e.g., be configured to determine the percentage value p, such that the percentage value p increases linearly in the range between the first threshold value and the second threshold value depending on the number of subsequent frames.

According to an embodiment, if error concealment is conducted by the decoding module 110, and if the previous bitstream payload of the previous frame does not encode a signal component which is tonal or harmonic, the decoding module 110 may, e.g., be configured to flip 50 % of the plurality of signs of the previous spectrum to reconstruct the current spectrum.

In an embodiment, if error concealment is conducted by the decoding module 110, the decoding module 110 may, e.g., be configured to reconstruct a current spectrum of the audio signal by conducting error concealment using a plurality of amplitudes of the previous spectrum of the audio signal depending on whether or not the previous frame encodes a signal component which is tonal or harmonic, said plurality of amplitudes being encoded within the previous frame.

According to an embodiment, if error concealment is conducted by the decoding module 110, the decoding module 110 may, e.g., be configured to attenuate the plurality of amplitudes of the previous spectrum according to a non-linear attenuation characteristic to reconstruct the current spectrum, wherein the non-linear attenuation characteristic depends on whether or not the previous bitstream payload of the previous frame encodes a signal component which is tonal or harmonic. For example, parameters for the non-linear attenuation characteristic may, e.g., be selected in a different way depending on whether or not signal component which is tonal or harmonic.

In an embodiment, if error concealment is conducted by the decoding module 110, and if the previous bitstream payload of the previous frame encodes a signal component which is tonal or harmonic, the decoding module 110 may, e.g., be configured to attenuate the plurality of amplitudes of the previous spectrum depending on a stability factor, wherein said stability factor indicates a similarity between the current spectrum and the previous spectrum; or wherein the stability factor indicates a similarity between the previous spectrum and a pre-previous spectrum of a pre-previous frame preceding the previous frame.

According to an embodiment, said pre-previous frame may, e.g., be a last received frame before the previous frame, which has been decoded by the decoding module 110 without conducting error concealment. Or, said pre-previous frame may, e.g., be a last received frame before the previous frame (e.g., a last but one received frame), which has been decoded by the decoding module 110 without conducting error concealment in the full frame loss concealment mode. Or, said pre-previous frame may, e.g., be a last received frame before the previous frame, which has been decoded by the decoding module 110 without conducting error concealment in the partial frame loss concealment mode or in the full frame loss concealment mode.

In an embodiment, said stability factor may, e.g., indicate said similarity between the current spectrum and the previous spectrum, if the decoding module 110 is set to conduct partial frame loss concealment. Said stability factor may, e.g., indicate said similarity between the previous spectrum and the pre-previous spectrum, if the decoding module 110 is set to conduct full frame loss concealment.

According to an embodiment, the decoding module 110 may, e.g., be configured to determine an energy of a spectral bin of the previous spectrum. Moreover, the decoding module 110 may, e.g., be configured to determine whether or not said energy of said spectral bin is smaller than an energy threshold. If said energy is smaller than said energy

threshold, the decoding module 110 may, e.g., be configured to attenuate an amplitude of the plurality of amplitudes being assigned to said spectral bin with a first fading factor. If said energy is greater than or equal to said energy threshold, the decoding module 110 may, e.g., be configured to attenuate said amplitude of the plurality of amplitudes being assigned to said spectral bin with a second fading factor, being smaller than the first fading factor. The decoding module 110 may, e.g., be configured to conduct attenuation such that by using a smaller fading factor for the attenuation of one of the plurality of amplitudes, the attenuation of said one of the amplitudes is increased.

In an embodiment, the decoding module 110 may, e.g., be configured to determine an energy of a spectral band comprising a plurality of spectral bins of the previous spectrum. The decoding module 110 may, e.g., be configured to determine whether or not said energy of said spectral band is smaller than an energy threshold. If said energy is smaller than said energy threshold, the decoding module 110 may, e.g., be configured to attenuate an amplitude of the plurality of amplitudes being assigned to said spectral bin of said spectral band with a first fading factor. If said energy is greater than or equal to said energy threshold, the decoding module 110 may, e.g., be configured to attenuate said amplitude of the plurality of amplitudes being assigned to said spectral bin of said spectral band with a second fading factor, being smaller than the first fading factor. The decoding module 110 may, e.g., be configured to conduct attenuation such that by using a smaller fading factor for the attenuation of one of the plurality of amplitudes, the attenuation of said one of the amplitudes is increased.

According to an embodiment, the decoding module 110 may, e.g., be configured to determine the first fading factor such that, depending on said number of subsequent frames, the first fading factor becomes smaller. Moreover, the decoding module 110 may, e.g., be configured to determine the second fading factor such that, depending on said number of subsequent frames, the second fading factor becomes smaller.

In an embodiment, the decoding module 110 may, e.g., be configured to determine the first fading factor and the second fading factor, so that

$$\texttt{cum_fading_slow} = 1, \text{ and}$$
$$\texttt{cum_fading_fast} = 1,$$

if the current frame is a first frame among the subsequent frames, and so that if the current frame is one of the frames succeeding the first frame among the subsequent frames, the

first fading factor and the second fading factor may, e.g., be determined depending on said number of subsequent frames according to:

```
cum_fading_slow = cum_fading_slow * slow;
cum_fading_fast = cum_fading_fast * fast;
```

wherein `cum_fading_slow` on the right side of the formula is the first fading factor of the previous frame (e.g., initialized with 1 at the first lost frame), wherein `cum_fading_slow` on the left side of the formula is the first fading factor of the current frame, wherein `cum_fading_fast` on the right side of the formula is the second fading factor of the previous frame (e.g., initialized with 1 at the first lost frame), wherein `cum_fading_fast` on the left side of the formula is the second fading factor of the current frame, wherein 1 > slow > fast > 0.

According to an embodiment, 1 > slow > fast > 0.3.

In an embodiment, the decoding module 110 may, e.g., be configured to determine said energy threshold, such that said energy threshold is equal to a first energy value, if said number of subsequent frames is smaller than a third threshold value; such that said energy threshold is smaller than said first energy value and is greater than a second energy value, if said number of subsequent frames is greater than or equal to the third threshold value and smaller than a fourth threshold value; and such that said energy threshold is equal to said second energy value, if said number of subsequent frames is greater than the fourth threshold value.

According to an embodiment, the decoding module 110 may, e.g., be configured to determine the energy threshold, such that the energy threshold decreases linearly in the range between the third threshold value and the fourth threshold value depending on the number of subsequent frames.

For those spectral lines, which are not available or which shall not be used, replacements are generated, whereas – depending on the tonality of the previously received signal, and, if this information is available, depending on the tonality of the currently received signal, a certain degree of tonality is preserved:

More tonality is preserved, if the indicator(s) indicate, that the last good signal was tonal.

Less tonality is preserved, if the indicator(s) indicate, that the last good signal was not tonal.

Tonality is mainly represented by the relationships of the phases between various bins within one frame and/or the relationships of the phases of the same bin for subsequent frames.

Some embodiments focus on the first aspect, namely that tonality is mainly represented by the relationships of the phases between various bins within one frame.

The phases of various bins within one frame are mainly characterized by their signs, but also by the relationship of the amplitude of neighbored bins. Hence, the preservation of the amplitude relationship as well as the preservation of the signs leads to a highly preserved tonality. Vice versa, the more the amplitude and/or the sign relationship is altered between subsequent bins, the less tonality is preserved.

Manipulation of the signs according to some of the embodiments is now described.

From the state of the art, two approaches are known:

According to a first approach, frame repetition is applied: The signs are preserved from the previous spectrum.

In a second approach, noise substitution is conducted: The signs are scrambled relative to the previous spectrum; randomly 50% of the signs are flipped.

For unvoiced signals, noise substitution provides good results.

For voiced signals, frame repetition could be used instead, but for longer losses, the preserved tonality (which is preferred at the beginning of the loss) might become annoying.

Embodiments are based on the finding that for voiced signals a transition phase between frame repetition and noise substitution is desirable.

According to some embodiments, this may, e.g., be achieved by randomly flipping a certain percentage of the signs per frame, where this percentage lies between 0% and 50%, and is increasing over time.

Now, manipulation of the amplitude according to some embodiments is described.

The simplest way, being frequently used in the state of the art, is the application of a certain attenuation factor to all frequency bins. This attenuation factor is increased from frame to frame to achieve a smooth fade-out. The fade-out speed might be fix or may depend on signal characteristics. With this approach, the relationship of the magnitude of neighbored bins as well as the spectral shape of the whole frame is preserved.

Also known in the state of the art is a band wise attenuation using different attenuation factors depending on the energy within each band. While this approach also preserves the relationship of the magnitude of neighbored bins within each band, the spectral shape of the whole frame is flattened.

According to some embodiments, bins with larger values are attenuated stronger than bins with smaller values. For this, some embodiments may, e.g., define a non-linear attenuation characteristic. This non-linear attenuation characteristic prevents overshoots, which might otherwise occur, since no alias cancellation is assured during the overlap-add, and alters the relationship of the magnitude of neighbored bins, which results in a flatter spectral shape. In order to flatten the spectral shape. Some embodiments are based on the finding that the ratio of the magnitude of neighbored bins should stay above one, if it was above one beforehand; and that the ratio should stay below one, if it was below one beforehand.

In order to apply this attenuation gracefully, in some embodiments, the non-linear characteristic may, e.g., be small at the beginning of the loss and may, e.g., than subsequently be increased. In embodiments, its adjustment over time may, e.g., depend on the tonality of the signal: According to some embodiments, for unvoiced signals, the non-linearity may, e.g., be stronger than for voiced signals.

Such non-linear attenuation characteristic influences the spectral shape. In embodiments, the spectrum may, e.g., get flatter over time, which reduces the chance of annoying synthetic sound artefacts during burst losses.

In the following, partial frame loss concealment according to some embodiments is described.

According to an embodiment, said error concealment mode may, e.g., be a partial frame loss concealment mode, wherein, if the decoding module 110 is in the partial frame loss concealment mode, the decoding module 110 may, e.g., be configured to reconstruct the audio signal without conducting error concealment for one or more first spectral lines of the plurality of spectral lines of the spectrum, which exhibit a frequency being smaller than or

equal to the threshold frequency, wherein said one or more first spectral lines have been encoded by a first group of one or more of the plurality of payload bits. Moreover, the decoding module 110 may, e.g., be configured to reconstruct the audio signal by conducting error concealment for one or more second spectral lines of the plurality of spectral lines of the spectrum, which exhibit a frequency being greater than the threshold frequency, wherein said one or more second spectral lines have been encoded by a second group of one or more of the plurality of payload bits.

In an embodiment, the decoding module 110 may, e.g., be configured to detect whether or not the current frame does not comprise any corrupted bits encoding said one or more first spectral lines of the spectrum of the audio signal which exhibit a frequency being smaller than or equal to the threshold frequency. Moreover, the decoding module 110 may, e.g., be configured to detect whether or not the current frame comprises one or more corrupted bits encoding said one or more second spectral lines of the spectrum of the audio signal which exhibit a frequency being greater than the threshold frequency. Said one or more corrupted bits are one or more of the payload bits that are distorted or that are likely to be distorted. If the current frame does not comprise any corrupted bits encoding said one or more first spectral lines of the spectrum of the audio signal which exhibit a frequency being smaller than or equal to the threshold frequency and if the current frame comprises said one or more corrupted bits encoding said one or more second spectral lines of the spectrum of the audio signal which exhibit a frequency being greater than the threshold frequency, the decoding module 110 may, e.g., be configured to conduct error concealment in the partial frame loss concealment mode by conducting error concealment for said one or more second spectral lines of the spectrum which are greater than the threshold frequency.

According to an embodiment, if the current frame does not comprise any corrupted bits encoding said one or more first spectral lines of the spectrum of the audio signal which exhibit a frequency being smaller than or equal to the threshold frequency and if the current frame comprises said one or more corrupted bits encoding said one or more second spectral lines of the spectrum of the audio signal which exhibit a frequency being greater than the threshold frequency, the decoding module 110 may, e.g., be configured to reconstruct the audio signal by decoding said first group of said one or more of the plurality of payload bits which encode said one or more first spectral lines of the spectrum of the audio signal which exhibit a frequency being smaller than or equal to the threshold frequency.

In an embodiment, the decoding module 110 may, e.g., be configured to detect whether the current frame is lost, wherein, if the decoder 100 has detected that the current frame is lost, the decoding module 110 may, e.g., be configured to reconstruct the audio signal by

conducting error concealment for said one or more second spectral lines of the spectrum of the audio signal which exhibit a frequency being greater than the threshold frequency. Moreover, the decoding module 110 may, e.g., be configured to decode without conducting error concealment for said first group, said first group of said one or more of the plurality of payload bits which encode said one or more first spectral lines for said one or more first frequencies of the spectrum of the audio signal being smaller than or equal to the threshold frequency, wherein said first group of said one or more of the plurality of payload bits are one or more payload bits of a redundant frame being different from the current frame.

In an embodiment, the redundant frame may, e.g., be a bandwidth limited version of the current frame. For example, the redundant frame may, e.g., provide data (e.g., a reduced data set compared to the current frame) that encodes the audio signal for a same time period as the current frame. This data may, e.g., be different for the plurality of payload bits which encodes the audio signal of said one or more first spectral lines for said one or more first frequencies of the spectrum of the audio signal being smaller than or equal to the threshold frequency as they are encoded with less bits than the current frame of said first frequencies of the spectrum for the same time period of the current frame.

In an embodiment, if the decoding module 110 is configured to conduct error concealment in a full frame loss concealment mode, the decoding module 110 is configured to conduct error concealment for all spectral lines of the (whole) spectrum (as otherwise reconstructable by all payload bits of the current bitstream payload of the current frame).

According to an embodiment, the plurality of payload bits is a plurality of current payload bits. If the decoding module 110 is in the partial frame loss concealment mode, the decoding module 110 may, e.g., be configured to conduct error concealment for said one or more second spectral lines of the spectrum of the audio signal which exhibit a frequency being greater than the threshold frequency, using one or more stored spectral lines which have been encoded by one or more previous payload bits of the previous bitstream payload of the previous frame.

In an embodiment, the spectrum may, e.g., be a current quantized spectrum. If the decoding module 110 is conducting error concealment in the partial frame loss concealment mode, the decoding module 110 may, e.g., be configured to conduct error concealment for said one or more second spectral lines of the spectrum of the audio signal which exhibit a frequency being greater than the threshold frequency, to obtain one or more intermediate spectral lines of said current quantized spectrum.

According to an embodiment, the spectrum is a current quantized spectrum. If the decoding module 110 is conducting error concealment in the partial frame loss concealment mode, the decoding module 110 may, e.g., be configured to conduct error concealment for said one or more second spectral lines of the spectrum of the audio signal which exhibit a frequency being greater than the threshold frequency, to obtain one or more intermediate spectral lines of said current quantized spectrum, wherein the decoding module 110 may, e.g., be configured to rescale the one or more intermediate spectral lines using a rescaling factor to reconstruct the audio signal.

In an embodiment, the decoding module 110 may, e.g., be configured to determine the rescaling factor depending on at least one of

- a global gain being encoded within said current bitstream payload and
- a global gain being encoded within said previous bitstream payload, and
- an energy of a previous quantized spectrum of said previous frame, an energy of a previous decoded spectrum of said previous frame, and
- an energy of said current quantized spectrum of said current frame.

According to an embodiment, the decoding module 110 may, e.g., be configured to determine the rescaling factor depending on whether or not

- a mean energy of spectral bins of the previous decoded spectrum of the previous frame starting from a first spectral bin that cannot be reconstructed without conducting error concealment up to a top of the spectrum is greater than or equal to a mean energy of spectral bins of the previous decoded spectrum of the previous frame starting from zero up to said last spectral bin that can be reconstructed without conducting error concealment, or
- an energy of spectral bins of said current quantized spectrum of the current frame starting from zero up to said last spectral bin that can be reconstructed without conducting error concealment is greater than or equal to an energy of spectral bins of the previous quantized spectrum of the previous frame starting from zero up to said last spectral bin that can be reconstructed without conducting error concealment.

In an embodiment,

- if the mean energy of the spectral bins of the previous decoded spectrum of the previous frame starting from said first spectral bin that cannot be reconstructed without conducting error concealment up to a top of the spectrum is smaller than the mean energy of the spectral bins of the previous decoded spectrum of the previous frame starting from zero up to said last spectral bin that can be reconstructed without conducting error concealment, and

- if the energy of spectral bins of said current quantized spectrum of the current frame starting from zero up to said last spectral bin that can be reconstructed without conducting error concealment is smaller than the energy of the spectral bins of the previous quantized spectrum of the previous frame starting from zero up to said last spectral bin that can be reconstructed without conducting error concealment,

the decoding module 110 may, e.g., be configured to determine the rescaling factor such that the rescaling factor is equal to the square root of the ratio of

- the energy of the spectral bins of the current quantized spectrum starting from zero up to said last spectral bin that can be reconstructed without conducting error concealment multiplied with the square of a gain factor of the current frame,

to

- the energy of the spectral bins of the previous quantized spectrum starting from zero up said last spectral bin that can be reconstructed without conducting error concealment multiplied with the square of a gain factor of the previous frame.

According to an embodiment, the decoding module 110 may, e.g., be configured to determine the rescaling factor, being a total rescaling factor, depends on a global gain rescaling factor, wherein the decoding module 110 may, e.g., be configured to determine the global gain rescaling factor according to

$$fac_{gg} = \frac{gg_{prev}}{gg}.$$

wherein gg indicates a global gain of the current frame, and wherein gg_{prev} indicates a global gain of said previous frame, and wherein fac_{gg} is the global gain rescaling factor.

In an embodiment,

if $\frac{1}{k_{be}}\sum_{k=0}^{k_{be}-1}\hat{X}_{prev}(k)^2 \leq \frac{1}{N_F-k_{be}}\sum_{k=k_{be}}^{N_F-1}\hat{X}_{prev}(k)^2$, or

if $gg_{prev}^2 \cdot \sum_{k=0}^{k_{be}-1}\widehat{X_{q,lG}}(k)^2 \leq gg^2 \cdot \sum_{k=0}^{k_{be}-1}\widehat{X_q}(k)^2$,

the decoding module 110 may, e.g., be configured to determine that the total rescaling factor is equal to the global gain rescaling factor, wherein k indicates a spectral bin, wherein k_{be} indicates a first spectral bin that could not be recovered, wherein N_F indicates a number of spectral lines, wherein $\widehat{X_{q,lG}}(k)$ indicates the previous quantized spectrum of the previous frame being a last non-full frame loss concealment frame, wherein $\widehat{X_q}(k)$ indicates the current quantized spectrum of the current frame, wherein $\hat{X}_{prev}(k)$ indicates the previous decoded spectrum of the previous frame being said last non-full frame loss concealment frame.

According to an embodiment,

if $\frac{1}{k_{be}}\sum_{k=0}^{k_{be}-1}\hat{X}_{prev}(k)^2 > \frac{1}{N_F-k_{be}}\sum_{k=k_{be}}^{N_F-1}\hat{X}_{prev}(k)^2$, and

if $gg_{prev}^2 \cdot \sum_{k=0}^{k_{be}-1}\widehat{X_{q,lG}}(k)^2 > gg^2 \cdot \sum_{k=0}^{k_{be}-1}\widehat{X_q}(k)^2$,

the decoding module 110 may, e.g., be configured to determine that the total rescaling factor moreover depends on an energy rescaling factor

$$fac_{ener} = \sqrt{\frac{gg^2 \cdot \sum_{k=0}^{k_{be}-1}\widehat{X_q}(k)^2}{gg_{prev}{}^2 \cdot \sum_{k=0}^{k_{be}-1}\widehat{X_{q,lG}}(k)^2}} ,$$

which may, e.g., be employed to form the total rescaling factor

$$fac = fac_{gg} \cdot fac_{ener} = \sqrt{\frac{\sum_{k=0}^{k_{be}-1}\widehat{X_q}(k)^2}{\sum_{k=0}^{k_{be}-1}\widehat{X_{q,lG}}(k)^2}} .$$

wherein fac_{ener} indicates the energy rescaling factor, wherein k indicates a spectral bin, wherein k_{be} indicates a first spectral bin that could not be recovered, wherein N_F indicates a number of spectral lines, wherein $\widehat{X_{q,lG}}(k)$ indicates the previous quantized spectrum of the previous frame being a last non-full frame loss concealment frame, wherein $\widehat{X_q}(k)$

indicates the current quantized spectrum of the current frame, wherein $\hat{X}_{prev}(k)$ indicates the previous decoded spectrum of the previous frame being said last non-full frame loss concealment frame.

In a scenario, where partial frame loss concealment is applied, it is assumed or it has been determined that the more sensitive bits of the bitstream payload were error-free.

In embodiments, the quantized spectrum $\widehat{X_q}(k)$ of the current frame may, e.g., be restored up to a certain frequency bin, here referred to as frequency bin $k_{be} - 1$. Partial frame loss concealment thus just conceals the quantized spectral lines above this frequency.

When conducting partial frame loss concealment according to some embodiments, the spectral lines of the quantized spectrum of the last non-FFLC frame $\widehat{X_{q,lG}}(k)$ may, e.g., be reused (FFLC = full frame loss concealment).

To prevent high-energy artefacts in transition frames changing in energy, the concealed spectral lines are subsequently rescaled, whereas the resulting rescaling factor may, e.g., depend on at least one of

a) global gains;
b) energies of the spectra;

Preferably, the resulting rescaling factor may, e.g., depend on both global gains and energies of the spectra.

The rescaling factor based on the global gains equals the ratio of the previous global gain to the current global gain.

The rescaling factor based on the energies is initialized with 1 (e.g., no rescaling is conducted/e.g., rescaling has no effect):

- If the mean energy of the spectral bins of the previous decoded spectrum starting from the frequency bin k_{be} (a first spectral bin that cannot be reconstructed without conducting error concealment) up to the top of the spectrum is larger or equal than the mean energy of the spectral bins of the previous decoded spectrum starting from zero up to the frequency bin $k_{be} - 1$ (a last spectral bin that can be reconstructed without conducting error concealment); or

- If the energy of the spectral bins of the current quantized spectrum starting from zero up to the frequency bin $k_{be} - 1$ is larger than or equal to the energy of the spectral bins of the previous quantized spectrum starting from zero up to the frequency bin $k_{be} - 1$.

Otherwise, the rescaling factor equals the square root of the ratio of

- The energy of the spectral bins of the current quantized spectrum starting from zero up to the frequency bin $k_{be} - 1$ multiplied with the square of the gain factor of the current frame; to
- the energy of the spectral bins of the previous quantized spectrum starting from zero up to the frequency bin $k_{be} - 1$ multiplied with the square of the gain factor of the previous frame.

When multiplying both factors in this case, the gain factors cancel each other out. Thus, the rescaling factor subsequently equals the square root of the ratio of

- The energy of the spectral bins of the current quantized spectrum starting from zero up to the frequency bin $k_{be} - 1$; to
- the energy of the spectral bins of the previous quantized spectrum starting from zero up to the frequency bin $k_{be} - 1$.

After that, the concealed quantized spectrum may, e.g., be handled as an error-free quantized spectrum. This means the subsequent decoder operations like noise filling, noise shaping or any other operations whose parameters are stored in the error-free bitstream payload may, e.g., be applied afterwards. Thus, possible concealing artefacts are mitigated.

Subsequently, a similar fading process as described above may, for example, be applied on the spectrum starting from the frequency bin k_{be} up to the top of the spectrum, for example, a possibly available tonal character may, e.g., be faded towards noise; and/or, for example, a possibly pronounced spectral shape may, e.g., be flattened; and/or the energy may, e.g., be decreased.

In the following, embodiments are described in detail.

Fig. 2 illustrates a decoding module 110 according to particular embodiments.

The decoding module 110 of Fig. 2 comprises a decoded spectrum storage module 330, and, optionally, a quantized spectrum storage module 310, a partial frame repetition &

rescaling module 320 and a fade-out and sign scrambling module 340. Particular details of these (sub)modules of the specific decoding module 110 of Fig. 2 are described with reference to Fig. 3 – Fig. 5.

Fig. 3 – Fig. 5 provide high-level overview of the LC3 decoder (exemplarily used as state-of-the-art transform coder that is modified in inventive ways) according to embodiments. In particular, Fig. 3 – Fig. 5 provide different kinds of specific embodiments for a decoding module 110.

In an embodiment, the decoding module 110 may, e.g., comprise a quantized spectrum storage module 310 configured for storing a quantized spectrum of the audio signal, wherein the quantized spectrum storage module 310 is configured to provide a last non-full frame loss concealment quantized spectrum. Moreover, the decoding module 110 may, e.g., comprise a decoded spectrum storage module 330 configured for storing a decoded spectrum of the audio signal, wherein the decoded spectrum storage module 330 is configured to provide a last non-full frame loss concealment decoded spectrum.

Fig. 3 illustrates a decoding module 110 overview according to an embodiment for clean channel decoding. In particular, Fig. 3 shows the normal decoder operation. The processing blocks required for the full frame loss concealment as well as for the partial frame loss concealment are processing blocks 310 and 330.

The quantized spectrum storage module 310 may, e.g., be configured for the storage of the quantized spectrum: The quantized spectrum storage module 310 stores the last non-FFLC quantized spectrum to allow its re-usage in the case of partial frame loss concealment.

The decoded spectrum storage module 330 is configured for the storage of the spectrum (e.g., referred to as the decoded spectrum): This processing block stores the last non-FFLC spectrum to allow its re-usage in the case of full frame loss concealment. It may, e.g., also be used for the rescaling during the partial frame loss concealment.

In an embodiment, the decoding module 110 may, e.g., comprise a decoded spectrum storage module 330 configured for storing a decoded spectrum of the audio signal, wherein the decoded spectrum storage module 330 is configured to provide a last non-full frame loss concealment decoded spectrum. Moreover, the decoding module 110 may, e.g., comprise a fade-out and sign scrambling module 340 being configured for fade-out and sign scrambling on spectral lines of the spectrum.

In addition, according to an embodiment, the decoding module 110 may, e.g., comprise a quantized spectrum storage module 310 configured for storing a quantized spectrum of the audio signal, wherein the quantized spectrum storage module 310 is configured to provide a last non-full frame loss concealment quantized spectrum. Furthermore, the decoding module 110 may, e.g., be comprise a partial frame repetition & rescaling module 320 configured for partial frame repetition and rescaling, wherein the partial frame repetition & rescaling module 320 is configured to complement the spectrum by adding spectral lines, which could not be decoded by the decoding module 110, wherein the partial frame repetition & rescaling module 320 is configured to re-scale said spectral lines.

Fig. 4 illustrates a decoding module 110 overview according to an embodiment for full frame loss concealment. In particular, Fig. 4 depicts an embodiment configured for conducting full frame loss concealment. The processing blocks required for the full frame loss concealment are processing blocks 330 and 340. Processing blocks 330 and 340 may, e.g., have the following tasks.

The decoded spectrum storage module 330 may, e.g., be configured for the storage of the spectrum (e.g., again referred to as the decoded spectrum): This processing block 330 provides the last non-FFLC spectrum.

The fade-out and sign scrambling module 340 may, e.g., be configured for fade-out and sign scrambling: This processing block is configured to create the spectrum by processing the spectral lines of the last non-FFLC frame, as described below.

Fig. 5 illustrates a decoding module 110 overview according to an embodiment for partial frame loss concealment.

In particular, Fig. 5 shows the application of partial frame loss concealment. The processing blocks required for the partial frame loss concealment are processing blocks 310, 320, 330 and 340. These processing blocks 310, 320, 330 and 340 have the following tasks:

The quantized spectrum storage module 310 may, e.g., be configured for the storage of the quantized spectrum: The quantized spectrum storage module 310 may, e.g., be configured to provide the last non-FFLC quantized spectrum.

The partial frame repetition & rescaling module 320 may, e.g., be configured for partial frame repetition and rescaling: This processing block may, e.g., be configured to complement the spectrum by adding those spectral lines, which could not be decoded.

Afterwards, those spectral lines may, e.g., be re-scaled and values below a certain threshold are quantized to zero, as explained below.

The decoded spectrum storage module 330 may, e.g., be configured for the storage of the spectrum (e.g., again referred to as the decoded spectrum): The decoded spectrum storage module 330 may, e.g., be configured to provide the last non-FFLC spectrum, which may, e.g., be used for computing the rescaling factor.

The fade-out and sign scrambling module 340 may, e.g., be configured for fade-out and sign scrambling: The fade-out and sign scrambling module 340 may, e.g., be configured to process the spectral lines, which were previously provided by the partial frame loss concealment. It is explained below.

In the following, error concealment depending on tonality according to some embodiments is described in more detail.

At first, a fading function according to some embodiments is provided.

For the fading processes implemented for the sign scrambling and the non-linear attenuation as described below, a function depending on the number of subsequently lost frames (nbLostFramesInRow) may, e.g., be employed, that is one (1) up to a certain value (plc_start_inFrames), that is zero (0) from a certain value (plc_end_inFrames); and that decreases linearly between one and zero (1 > x > 0) between plc_start_inFrames and plc_end_inFrames.

A particular embodiment may, e.g., be implemented as follows:

```
plc_duration_inFrames = plc_end_inFrames - plc_start_inFrames;

x = max(plc_start_inFrames, (min (nbLostFramesInRow,
plc_end_inFrames)));
m = -1 / plc_duration_inFrames;
b = - plc_end_inFrames;

linFuncStartStop = m * (x + b);
```

where:

`plc_start_inFrames` – number of subsequently lost frames, up to which the value of linFuncStartStop equals 1

`plc_end_inFrames`	–	number of subsequently lost frames, from which the value of `linFuncStartStop` equals 0
`linFuncStartStop`	–	value of fading function

The start value and the end value might be chosen differently depending on the signal characteristic (e.g. voiced vs. unvoiced) and depending on the frame loss concealment (e.g. PFLC vs. FFLC) (PFLC = partial frame loss concealment; FFLC = full frame loss concealment).

Fig. 6 illustrates a fading function according to an embodiment which depends on a number of lost frames in a row (a number of subsequently lost frames).

In particular, Fig. 6 provides an example of this fading function, which is configured to decrease linearly between 20ms and 60ms.

In the following, manipulation of signs according to some embodiments is described in more detail.

As a prerequisite, a threshold for sign scrambling may, e.g., be determined based on the fading value (`linFuncStartStop`) as derived above.

```
randThreshold = -32768 * linFuncStartStop;
```

Fig. 7 illustrates a threshold for sign scrambling according to an embodiment, which depends on a number of lost frames in a row (a number of subsequently lost frames) and which further depends on a frame length.

In particular, Fig. 7 provides an example for a threshold which depends on a number of consecutively lost frames using the fading function, where a threshold of 0 corresponds to 50% sign flipping, whereas a threshold of -32768 corresponds to 0% sign flipping.

An embodiment may, e.g., be realized by the following pseudo code:

```
for k=k_be.. N_F - 1
    seed = 16831+seed*12821;
    seed = seed-round(seed*2^-16)*2^16;
    if seed==32768
        seed=-32768;
    end

    if (seed < 0 && pitch_present == 0) || seed < randThreshold
        spec(k) = -spec_prev(k);
    else
        spec(k) =  spec_prev(k);
    end
end
```

where:

k	–	spectral bin
k_{be}	–	first spectral bin which could not be recovered
N_F	–	number of spectral lines
seed	–	random value with the exemplary initial value of 24607
pitch_present	–	information, whether the signal in the current frame is tonal
spec_prev(k)	–	spectral value of bin k in last good frame (also referred to as $\hat{X}_{prev}(k)$)
spec(k)	–	spectral value of bin k in current frame.

In this example, the seed (i.e. the random value) varies between 32768 and -32768. For unvoiced signals (pitch_present == 0), the threshold for the sign inversion is zero, which leads to a 50% probability. For voiced signals, a variable threshold (randThreshold) is applied, which lies between -32768 (0 % probability of sign inversion) and zero (50% probability of sign inversion).

In the following, a manipulation of the amplitude according to some embodiments is described in more detail.

In a particular embodiment, two attenuation factors may, e.g., be defined depending on a stability measure, for example, as follows:

```
slow = 0.8 + 0.2 * stabFac;
fast = 0.3 + 0.2 * stabFac;
```

wherein `stabFac` indicates a stability value between the last and second last frame in FFLC case or current and last frame in PFLC case.

The stability factor may, for example, represent a similarity between two signals, for example, between the current signal and a past signal. For example, the stability factor may, e.g., be bounded by [0:1]. A stability factor close to 1 or 1 may, e.g., mean that both signals are very similar and a stability factor close to 0 or 0 may, e.g., mean that both signals are very different. The similarity may, for example, be calculated on the spectral envelopes of two audio signals.

The stability factor θ may, for example, be calculated as:

$$\theta = 1.25 - \frac{1}{25}\sum_{k=0}^{N-1}\left(scfQ_{curr}(k) - scfQ_{prev}(k)\right)^2$$

wherein:

$scfQ_{curr}$	indicates a scalefactor vector of the current frame, and
$scfQ_{prev}$	indicates a scalefactor vector of the previous frame
N	indicates the number of scalefactors within the scalefactor vectors
θ	indicates a stability factor, which is bounded by $0 \leq \theta \leq 1$
k	indicates an index for a scalefactor vector

In some embodiments, stabFac may, for example, be used differently for FFLC and for PFLC; i.e. it could be set a value between 0 and 1 depending on the stability for FFLC, whereas it could be set to 1 for PFLC.

Subsequently, corresponding cumulative attenuation factors (cum_fading_slow and cum_fading_fast, initialized with 1 at the beginning of each burst loss) may, for example, be derived, which may, e.g., change from frame to frame, for example, as follows:

```
cum_fading_slow = cum_fading_slow * slow;
cum_fading_fast = cum_fading_fast * fast;
```

wherein: `cum_fading_slow` indicates a slow cumulative damping factor; and wherein `cum_fading_fast` indicates a fast cumulative damping factor.

In an embodiment, the accumulation may, e.g., be done just for FFLC, but not for PFLC.

Furthermore, according to an embodiment, values for a first threshold (ad_ThreshFac_start) and a last threshold (ad_ThreshFac_end) may, e.g., be defined. In some embodiments, these values may, e.g., be chosen heuristically. Usually, both values may, e.g., be larger than one (1), and the first threshold is larger than the last threshold. Based on those two threshold limits, the threshold for the current frame (ad_threshFac) may, e.g., be determined based on the fading value (linFuncStartStop) as derived above:

```
ad_ThreshFac_start = 10;
ad_ThreshFac_end   = 1.2;
ad_threshFac = (ad_ThreshFac_start - ad_ThreshFac_end) *
linFuncStartStop + ad_ThreshFac_end;
```

wherein `ad_ThreshFac_start` indicates a first factor to mean energy, above which a stronger attenuation is applied; and wherein `ad_ThreshFac_stop` indicates a last factor to mean energy, above which a stronger attenuation is applied.

The threshold adjustment could be done just for FFLC, but not for PFLC. In this case, the threshold would be fix for subsequent frames.

Fig. 8 illustrates an energy threshold factor according to an embodiment, which depends on a number of lost frames in a row and which further depends on a frame length.

In particular, Fig. 8 provides an example for a threshold factor depending on the number of consecutively lost frames using the fading function, wherein the threshold factor decreases from 10 to 1.2 between 20 ms and 60 ms.

In a particular embodiment, the adaptive fading is operating on a bin granularity. It could be realized as follows:

```
frame_energy = mean(spec(k_be.. N_F - 1).^2);
energThreshold = ad_threshFac * frame_energy;

for k=k_be.. N_F - 1
    if (spec(k)^2) < energThreshold
        m = cum_fading_slow;
        n = 0;
    else
         m = cum_fading_fast;
         n = (cum_fading_slow-cum_fading_fast)
               * sqrt(energThreshold)
               * sign(spec_prev(k));
    end

    spec(k) = m * spec_prev(k) + n;
```

```
end
```

where:

k	–	spectral bin
k_{be}	–	first spectral bin which could not be recovered
N_F	–	number of spectral lines
spec_prev(k)	–	spectral value of bin k in last good frame (below referred to as $\hat{X}_{prev}(k)$)
spec(k)	–	spectral value of bin k in current frame.

The derivation of n in the else path makes sure, that the attenuation curve keeps larger values larger, and smaller values smaller.

Fig. 9 depicts an example where cumulative damping is applied. Possible input values in the example are between 0 and 1000. n=0 refers to a received frame and provides some sort of reference. In the example, the initial slow attenuation factor is set to 0.9, and the initial fast attenuation factor is set to 0.4 (stabFac=0.5). In the second frame, the squares of those values are used, and so on, which makes subsequent curves flatter. At the same time, the threshold may, e.g., be reduced, which moves the twist of the successive curves further to the left.

In another particular embodiment, the adaptive fading is operating band wise. In that example, band wise energies are derived, and an adaptive damping is just applied to bins in bands, which are above the mean over all bands. In those cases, the energy of that band may, e.g., be used as threshold for bin wise adaptive damping. An exemplary implementation may, for example, be realized as follows:

```
bin_energy_per_band = zeros(ceil((N_F - k_be )/8),1);
idx = 1;
for k=k_be:8:(N_F-7)
    bin_energy_per_band(idx) = mean(spec(k:k+7).^2);
    idx = idx + 1;
end
energThreshold = ad_threshFac * mean(bin_energy_per_band);
idx = 1;
for k=k_be:8:(N_F-7)
    if bin_energy_per_band(idx) < energThreshold
        m = cum_fading_slow;
        spec(k:k+7) = m * spec_prev(k:k+7);
    else
        for j=k:k+7
```

```
                if (spec(j)^2) < bin_energy_per_band(idx)
                    m = cum_fading_slow;
                    n = 0;
                else
                    m = cum_fading_fast;
                    n = (cum_fading_slow-cum_fading_fast) *
sqrt(energThreshold) * sign(spec_prev(j));
                end
                spec(j) = m * spec_prev(j) + n;
            end
        end
        idx = idx + 1;
end
```

wherein:

`k, j`	–	spectral bin
k_{be}	–	first spectral bin which could not be recovered
N_F	–	number of spectral lines
`spec_prev(k)`	–	spectral value of bin k in last good frame (below referred to as $\hat{X}_{prev}(k)$)
`spec(k)`	–	spectral value of bin k in current frame
`idx`	–	band index
`bin_energy_per_band`	–	bin energy per band

The storage of the spectral lines during a received frame as well as the insertion of the spectral lines during a (partially or fully) lost frame may, in general, be performed at any place between the decoding of the spectrum based on the information provided in the bitstream and the transformation back into the time domain. Referring to LC3, it may especially be performed, e.g., before or after SNS decoding (SNS = Spectral Noise Shaping), e.g., before or after TNS decoding (TNS = Temporal Noise Shaping), e.g., before or after the application of the global gain, and/or, e.g., before or after the noise filling.

The selection of the preferred location may also vary depending on the availability of additional information for the partially or fully lost frame. It may, e.g., be performed at the beginning of the signal processing in the case of a partially lost frame (partial frame loss concealment); since in this case the parameters for the subsequent signal processing steps are available. It may, e.g., be performed at a later stage in the case of a fully lost frame (full frame loss concealment), since in this case no parameters of the subsequent signal processing steps are available. It may, however, e.g., still be performed before the SNS decoding, since this step allows a dedicated spectral shaping.

In the following, partial frame loss concealment according to some embodiments is described in more detail.

A particular implementation for partial frame loss concealment may, e.g., first apply the rescaling factor and then may, e.g., quantize spectral bins below a certain threshold to zero. This is shown in the following example pseudo code:

```
for k=k_be .. N_F − 1
  X̂_q(k) = X̂_q,lG(k) · fac;
  if |X̂_q(k)| < threshold
    X̂_q(k) = 0;
```

wherein:

k	– spectral bin
N_F	– number of spectral lines
k_{be}	– first spectral bin which could not be recovered
$\widehat{X_q}(k)$	– quantized spectral line k of the current frame
$\widehat{X_{q,lG}}(k)$	– quantized spectral line k of the last non-FFLC frame
fac	– rescaling factor
threshold	– threshold value with the exemplary value of 0.625 to quantize to zero.

The rescaling factor depending on the global gains fac_{gg} is derived as the ratio between current and the past global gain:

$$fac_{gg} = \frac{gg_{prev}}{gg}.$$

The rescaling factor depending on the energies fac_{ener} is initialized with 1. If the following conditions are met

1. $\frac{1}{k_{be}}\sum_{k=0}^{k_{be}-1}\hat{X}_{prev}(k)^2 > \frac{1}{N_F-k_{be}}\sum_{k=k_{be}}^{N_F-1}\hat{X}_{prev}(k)^2$
2. $gg_{prev}^2 \cdot \sum_{k=0}^{k_{be}-1}\widehat{X_{q,lG}}(k)^2 > gg^2 \cdot \sum_{k=0}^{k_{be}-1}\widehat{X_q}(k)^2,$

this rescaling factor is set to the root of the ratio between the current and the past quantized spectrum multiplied with the square of their corresponding global gains:

$$fac_{ener} = \sqrt{\frac{gg^2 \cdot \sum_{k=0}^{k_{be}-1} \widehat{X_q}(k)^2}{gg_{prev}{}^2 \cdot \sum_{k=0}^{k_{be}-1} \widehat{X_{q,lG}}(k)^2}}.$$

The total rescaling factor is derived as

$$fac = fac_{gg} \cdot fac_{ener}.$$

When $fac_{ener} \neq 1$, this leads to (the global gain values cancel each other out):

$$fac = \frac{gg_{prev}}{gg} \cdot \sqrt{\frac{gg^2 \cdot \sum_{k=0}^{k_{be}-1} \widehat{X_q}(k)^2}{gg_{prev}{}^2 \cdot \sum_{k=0}^{k_{be}-1} \widehat{X_{q,lG}}(k)^2}} = \sqrt{\frac{\sum_{k=0}^{k_{be}-1} \widehat{X_q}(k)^2}{\sum_{k=0}^{k_{be}-1} \widehat{X_{q,lG}}(k)^2}}.$$

The variables in the above equations have the following meaning:

k	– spectral bin
k_{be}	– first spectral bin that could not be recovered
N_F	– number of spectral lines
$\widehat{X_{q,lG}}(k)$	– quantized spectrum of last non-FFLC frame
$\widehat{X_q}(k)$	– quantized spectrum of the current frame
$\hat{X}_{prev}(k)$	– decoded spectrum of the last non-FFLC frame
gg	– global gain of the current frame (if the quantized spectrum coded in the bitstream is rescaled with a global gain)
gg_{prev}	– global gain of the last non-FFLC frame (if the quantized spectrum coded in the bitstream is rescaled with a global gain).

The following example pseudo code shows the determination of the rescaling factor according to an exemplary implementation:

```
fac = ggprev/gg;
mean_nrg_high = mean(X̂prev(kbe: NF − 1).^2);
mean_nrg_low = mean(X̂prev(0: kbe-1).^2);
if (mean_nrg_low > mean_nrg_high)
    ener_prev = sum(X̂q,lG(0: kbe-1).^2);
    ener_curr = sum(X̂q(0: kbe-1).^2);
    if ener_prev*ggprev^2 > ener_curr*gg^2
        fac = sqrt(ener_curr/ener_prev);
```

wherein:

fac	– rescaling factor
gg	– global gain of the current frame (if the quantized spectrum coded in the bitstream is rescaled with a global gain)
gg_{prev}	– global gain of the last non-FFLC frame (if the quantized spectrum coded in the bitstream is rescaled with a global gain)
k_{be}	– first spectral bin which could not be recovered
N_F	– number of spectral lines
$\hat{X}_{prev}$	– decoded spectrum of the last non-FFLC frame
$\widehat{X_{q,IG}}(k)$	– quantized spectrum of the last non-FFLC frame
$\widehat{X_q}(k)$	– quantized spectrum of the current frame
sqrt	– square root function.

Although some aspects have been described in the context of an apparatus, it is clear that these aspects also represent a description of the corresponding method, where a block or device corresponds to a method step or a feature of a method step. Analogously, aspects described in the context of a method step also represent a description of a corresponding block or item or feature of a corresponding apparatus. Some or all of the method steps may be executed by (or using) a hardware apparatus, like for example, a microprocessor, a programmable computer or an electronic circuit. In some embodiments, one or more of the most important method steps may be executed by such an apparatus.

Depending on certain implementation requirements, embodiments of the invention can be implemented in hardware or in software or at least partially in hardware or at least partially in software. The implementation can be performed using a digital storage medium, for example a floppy disk, a DVD, a Blu-Ray, a CD, a ROM, a PROM, an EPROM, an EEPROM or a FLASH memory, having electronically readable control signals stored thereon, which cooperate (or are capable of cooperating) with a programmable computer system such that the respective method is performed. Therefore, the digital storage medium may be computer readable.

Some embodiments according to the invention comprise a data carrier having electronically readable control signals, which are capable of cooperating with a programmable computer system, such that one of the methods described herein is performed.

Generally, embodiments of the present invention can be implemented as a computer program product with a program code, the program code being operative for performing one of the methods when the computer program product runs on a computer. The program code may for example be stored on a machine readable carrier.

Other embodiments comprise the computer program for performing one of the methods described herein, stored on a machine readable carrier.

In other words, an embodiment of the inventive method is, therefore, a computer program having a program code for performing one of the methods described herein, when the computer program runs on a computer.

A further embodiment of the inventive methods is, therefore, a data carrier (or a digital storage medium, or a computer-readable medium) comprising, recorded thereon, the computer program for performing one of the methods described herein. The data carrier, the digital storage medium or the recorded medium are typically tangible and/or non-transitory.

A further embodiment of the inventive method is, therefore, a data stream or a sequence of signals representing the computer program for performing one of the methods described herein. The data stream or the sequence of signals may for example be configured to be transferred via a data communication connection, for example via the Internet.

A further embodiment comprises a processing means, for example a computer, or a programmable logic device, configured to or adapted to perform one of the methods described herein.

A further embodiment comprises a computer having installed thereon the computer program for performing one of the methods described herein.

A further embodiment according to the invention comprises an apparatus or a system configured to transfer (for example, electronically or optically) a computer program for performing one of the methods described herein to a receiver. The receiver may, for example, be a computer, a mobile device, a memory device or the like. The apparatus or system may, for example, comprise a file server for transferring the computer program to the receiver.

In some embodiments, a programmable logic device (for example a field programmable gate array) may be used to perform some or all of the functionalities of the methods described herein. In some embodiments, a field programmable gate array may cooperate with a microprocessor in order to perform one of the methods described herein. Generally, the methods are preferably performed by any hardware apparatus.

The apparatus described herein may be implemented using a hardware apparatus, or using a computer, or using a combination of a hardware apparatus and a computer.

The methods described herein may be performed using a hardware apparatus, or using a computer, or using a combination of a hardware apparatus and a computer.

The above described embodiments are merely illustrative for the principles of the present invention. It is understood that modifications and variations of the arrangements and the details described herein will be apparent to others skilled in the art. It is the intent, therefore, to be limited only by the scope of the impending patent claims and not by the specific details presented by way of description and explanation of the embodiments herein.

References:

[1] P. Lauber and R. Sperschneider, "Error Concealment for Compressed Digital Audio," in *Audio Engineering Society*, 2001.

[2] J. Lecomte and A. Tomasek, "ERROR CONCEALMENT UNIT, AUDIO DECODER, AND RELATED METHOD AND COMPUTER PROGRAM FADING OUT A CONCEALED AUDIO FRAME OUT ACCORDING TO DIFFERENT DAMPING FACTORS FOR DIFFERENT FREQUENCY BANDS", WO 2017/153299 A2, published 2017.

[3] A. Rämö, A. Kurittu and H. Toukomaa, "EVS Channel Aware Mode Robustness to Frame Erasures," in *Interspeech 2016*, San Francisco, CA, USA, 2016.

[4] A. Venkatraman, D. J. Sinder, S. Shaminda, R. Vivek, D. Duminda, C. Venkata, V. Imre, K. Venkatesh, S. Benjamin, L. Jeremie, Z. Xingtao and M. Lei, "Improved Error Resilience for VoLTE and VoIP with 3GPP EVS Channel Aware Coding," in ICASSP 2015.

[5] M. Schnabel, G. Markovic, R. Sperschneider, C. Helmrich and J. Lecomte, "Apparatus and method realizing a fading of an mdct spectrum to white noise prior to fdns application". European Patent EP 3 011 559 B1, published 2017.

Claims

1. A decoder (100) for decoding a current frame to reconstruct an audio signal, wherein the audio signal is encoded within the current frame, wherein the current frame comprises a current bitstream payload, wherein the current bitstream payload comprises a plurality of payload bits, wherein the plurality of payload bits encodes a plurality of spectral lines of a spectrum of the audio signal, wherein each of the payload bits exhibits a position within the current bitstream payload,

wherein the decoder (100) comprises

a decoding module (110) configured to reconstruct the audio signal, and

an output interface (120) configured to output the audio signal,

wherein the decoding module (110) comprises an error concealment mode, wherein, if the decoding module (110) is in said error concealment mode, the decoding module (110) is configured to reconstruct the audio signal by conducting error concealment for those spectral lines of the spectrum of the audio signal, which exhibit a frequency being greater than a threshold frequency; and/or

wherein, if error concealment is conducted by the decoding module (110), the decoding module (110) is configured to conduct error concealment in a way that depends on whether or not a previous bitstream payload of a previous frame preceding the current frame encodes a signal component of the audio signal which is tonal or harmonic.

2. A decoder (100) according to claim 1,

wherein said error concealment mode is a partial frame loss concealment mode, wherein, if the decoding module (110) is in the partial frame loss concealment mode, the decoding module (110) is configured

to reconstruct the audio signal without conducting error concealment for one or more first spectral lines of the plurality of spectral lines of the spectrum, which exhibit a frequency being smaller than or equal to the threshold frequency, wherein said one or more first spectral lines have been encoded by a first group of one or more of the plurality of payload bits, and

to reconstruct the audio signal by conducting error concealment for one or more second spectral lines of the plurality of spectral lines of the spectrum, which exhibit a frequency being greater than the threshold frequency, wherein said one or more second spectral lines have been encoded by a second group of one or more of the plurality of payload bits.

3. A decoder (100) according to claim 2,

wherein the decoding module (110) is configured to detect whether or not the current frame does not comprise any corrupted bits encoding said one or more first spectral lines of the spectrum of the audio signal which exhibit a frequency being smaller than or equal to the threshold frequency,

wherein the decoding module (110) is configured to detect whether or not the current frame comprises one or more corrupted bits encoding said one or more second spectral lines of the spectrum of the audio signal which exhibit a frequency being greater than the threshold frequency,

wherein said one or more corrupted bits are one or more of the payload bits that are distorted or that are likely to be distorted, and

wherein, if the current frame does not comprise any corrupted bits encoding said one or more first spectral lines of the spectrum of the audio signal which exhibit a frequency being smaller than or equal to the threshold frequency and if the current frame comprises said one or more corrupted bits encoding said one or more second spectral lines of the spectrum of the audio signal which exhibit a frequency being greater than the threshold frequency, the decoding module (110) is configured to conduct error concealment in the partial frame loss concealment mode by conducting error concealment for said one or more second spectral lines of the spectrum which are greater than the threshold frequency.

4. A decoder (100) according to claim 3,

wherein, if the current frame does not comprise any corrupted bits encoding said one or more first spectral lines of the spectrum of the audio signal which exhibit a frequency being smaller than or equal to the threshold frequency and if the current frame comprises said one or more corrupted bits encoding said one or more second

spectral lines of the spectrum of the audio signal which exhibit a frequency being greater than the threshold frequency, the decoding module (110) is configured to reconstruct the audio signal by decoding said first group of said one or more of the plurality of payload bits which encode said one or more first spectral lines of the spectrum of the audio signal which exhibit a frequency being smaller than or equal to the threshold frequency.

5. A decoder (100) according to one of claims 2 to 4,

wherein the decoding module (110) is configured to detect whether the current frame is lost,

wherein, if the decoder (100) has detected that the current frame is lost, the decoding module (110) is configured to reconstruct the audio signal

by conducting error concealment for said one or more second spectral lines of the spectrum of the audio signal which exhibit a frequency being greater than the threshold frequency, and

by decoding without conducting error concealment, said first group of said one or more of the plurality of payload bits which encode said one or more first spectral lines for said one or more first frequencies of the spectrum of the audio signal being smaller than or equal to the threshold frequency, wherein said first group of said one or more of the plurality of payload bits are one or more payload bits of a redundant frame being different from the current frame.

6. A decoder (100) according to one of claims 2 to 5,

wherein, if the decoding module (110) is configured to conduct error concealment in a full frame loss concealment mode, the decoding module (110) is configured to conduct error concealment for all spectral lines of the spectrum.

7. A decoder (100) according to claim 6,

wherein the plurality of payload bits is a plurality of current payload bits,

wherein, if the decoding module (110) is in the partial frame loss concealment mode, the decoding module (110) is configured to conduct error concealment for said one or more second spectral lines of the spectrum of the audio signal which exhibit a frequency being greater than the threshold frequency, using one or more stored spectral lines which have been encoded by one or more previous payload bits of the previous bitstream payload of the previous frame.

8. A decoder (100) according to claim 7,

wherein the spectrum is a current quantized spectrum,

wherein, if the decoding module (110) is conducting error concealment in the partial frame loss concealment mode, the decoding module (110) is configured to conduct error concealment for said one or more second spectral lines of the spectrum of the audio signal which exhibit a frequency being greater than the threshold frequency, to obtain one or more intermediate spectral lines of said current quantized spectrum, wherein the decoding module (110) is configured to rescale the one or more intermediate spectral lines using a rescaling factor to reconstruct the audio signal.

9. A decoder (100) according to claim 8,

wherein the decoding module (110) is configured to determine the rescaling factor depending on at least one of

a global gain being encoded within said current bitstream payload and

a global gain being encoded within said previous bitstream payload, and

an energy of a previous quantized spectrum of said previous frame, an energy of a previous decoded spectrum of said previous frame, and

an energy of said current quantized spectrum of said current frame.

10. A decoder (100) according to claim 8 or 9,

wherein the decoding module (110) is configured to determine the rescaling factor depending on whether or not

a mean energy of spectral bins of the previous decoded spectrum of the previous frame starting from a first spectral bin that cannot be reconstructed without conducting error concealment up to a top of the spectrum is greater than or equal to a mean energy of spectral bins of the previous decoded spectrum of the previous frame starting from zero up to said last spectral bin that can be reconstructed without conducting error concealment, or

an energy of spectral bins of said current quantized spectrum of the current frame starting from zero up to said last spectral bin that can be reconstructed without conducting error concealment is greater than or equal to an energy of spectral bins of the previous quantized spectrum of the previous frame starting from zero up to said last spectral bin that can be reconstructed without conducting error concealment.

11. A decoder (100) according to claim 10,

wherein,

if the mean energy of the spectral bins of the previous decoded spectrum of the previous frame starting from said first spectral bin that cannot be reconstructed without conducting error concealment up to a top of the spectrum is smaller than the mean energy of the spectral bins of the previous decoded spectrum of the previous frame starting from zero up to said last spectral bin that can be reconstructed without conducting error concealment, and

if the energy of spectral bins of said current quantized spectrum of the current frame starting from zero up to said last spectral bin that can be reconstructed without conducting error concealment is smaller than the energy of the spectral bins of the previous quantized spectrum of the previous frame starting from zero up to said last spectral bin that can be reconstructed without conducting error concealment,

the decoding module (110) is configured to determine the rescaling factor such that the rescaling factor is equal to the square root of the ratio of

the energy of the spectral bins of the current quantized spectrum starting from zero up to said last spectral bin that can be reconstructed without conducting error concealment multiplied with the square of a gain factor of the current frame,

to

the energy of the spectral bins of the previous quantized spectrum starting from zero up said last spectral bin that can be reconstructed without conducting error concealment multiplied with the square of a gain factor of the previous frame.

12. A decoder (100) according to one of claims 9 to 11,

wherein the decoding module (110) is configured to determine the rescaling factor, being a total rescaling factor, depends on a global gain rescaling factor,

wherein the decoding module (110) is configured to determine the global gain rescaling factor according to

$$fac_{gg} = \frac{gg_{prev}}{gg} \quad ,$$

wherein gg indicates said global gain being encoded within said current bitstream payload, and

wherein gg_{prev} indicates said global gain being encoded within said previous bitstream payload, and

wherein fac_{gg} is the global gain rescaling factor.

13. A decoder (100) according to claim 12,

wherein,

if $\frac{1}{k_{be}} \sum_{k=0}^{k_{be}-1} \hat{X}_{prev}(k)^2 \leq \frac{1}{N_F - k_{be}} \sum_{k=k_{be}}^{N_F-1} \hat{X}_{prev}(k)^2$, or

if $gg_{prev}^2 \cdot \sum_{k=0}^{k_{be}-1} \widehat{X_{q,lG}}(k)^2 \leq gg^2 \cdot \sum_{k=0}^{k_{be}-1} \widehat{X_q}(k)^2$,

the decoding module (110) is configured to determine that the total rescaling factor is equal to the global gain rescaling factor,

wherein k indicates a spectral bin, wherein k_{be} indicates a first spectral bin that could not be recovered, wherein N_F indicates a number of spectral lines, wherein $\widehat{X_{q,lG}}(k)$ indicates the previous quantized spectrum of the previous frame being a last non-full frame loss concealment frame, wherein $\widehat{X_q}(k)$ indicates the current quantized spectrum of the current frame, wherein $\hat{X}_{prev}(k)$ indicates the previous decoded spectrum of the previous frame being said last non-full frame loss concealment frame.

14. A decoder (100) according to claim 12 or 13,

wherein,

if $\frac{1}{k_{be}}\sum_{k=0}^{k_{be}-1}\hat{X}_{prev}(k)^2 > \frac{1}{N_F-k_{be}}\sum_{k=k_{be}}^{N_F-1}\hat{X}_{prev}(k)^2$, and

if $gg_{prev}^2 \cdot \sum_{k=0}^{k_{be}-1}\widehat{X_{q,lG}}(k)^2 > gg^2 \cdot \sum_{k=0}^{k_{be}-1}\widehat{X_q}(k)^2$,

the decoding module (110) is configured to determine that the total rescaling factor moreover depends on an energy rescaling factor

$$fac_{ener} = \sqrt{\frac{gg^2 \cdot \sum_{k=0}^{k_{be}-1}\widehat{X_q}(k)^2}{gg_{prev}{}^2 \cdot \sum_{k=0}^{k_{be}-1}\widehat{X_{q,lG}}(k)^2}} ,$$

wherein fac_{ener} indicates the energy rescaling factor,

wherein k indicates a spectral bin, wherein k_{be} indicates a first spectral bin that could not be recovered, wherein N_F indicates a number of spectral lines, wherein $\widehat{X_{q,lG}}(k)$ indicates the previous quantized spectrum of the previous frame being a last non-full frame loss concealment frame, wherein $\widehat{X_q}(k)$ indicates the current quantized spectrum of the current frame, wherein $\hat{X}_{prev}(k)$ indicates the previous decoded spectrum of the previous frame being said last non-full frame loss concealment frame.

15. A decoder (100) according to claim 14,

wherein,

if $\frac{1}{k_{be}}\sum_{k=0}^{k_{be}-1}\hat{X}_{prev}(k)^2 > \frac{1}{N_F-k_{be}}\sum_{k=k_{be}}^{N_F-1}\hat{X}_{prev}(k)^2$, and

if $gg_{prev}^2 \cdot \sum_{k=0}^{k_{be}-1}\widehat{X_{q,lG}}(k)^2 > gg^2 \cdot \sum_{k=0}^{k_{be}-1}\widehat{X_q}(k)^2$,

the decoding module (110) is configured to determine the total rescaling factor fac according to

$$fac = fac_{gg} \cdot fac_{ener} \quad ,$$

or according to

$$fac = \sqrt{\frac{\sum_{k=0}^{k_{be}-1}\widehat{X_q}(k)^2}{\sum_{k=0}^{k_{be}-1}\widehat{X_{q,lG}}(k)^2}} \quad ,$$

or according to

$$fac = \frac{gg_{prev}}{gg} \cdot \sqrt{\frac{gg^2 \cdot \sum_{k=0}^{k_{be}-1}\widehat{X_q}(k)^2}{{gg_{prev}}^2 \cdot \sum_{k=0}^{k_{be}-1}\widehat{X_{q,lG}}(k)^2}} \quad .$$

16. A decoder (100) according to one of the preceding claims,

wherein, if error concealment is conducted by the decoding module (110), the decoding module (110) is configured to reconstruct a current spectrum of the audio signal by conducting error concealment using a plurality of signs of a previous spectrum of the audio signal, said plurality of signs being encoded within the previous frame, wherein the decoding module (110) is configured to conduct error concealment in a way that depends on whether or not said previous frame encodes a signal component which is tonal or harmonic.

17. A decoder (100) according to claim 16,

wherein said previous frame is a last received frame, which has been decoded by the decoding module (110) without conducting error concealment, or

wherein said previous frame is a last received frame, which has been decoded by the decoding module (110) without conducting error concealment in a full frame loss concealment mode, or

wherein said previous frame is a last received frame, which has been decoded by the decoding module (110) without conducting error concealment in a partial frame loss concealment mode or in a full frame loss concealment mode.

18. A decoder (100) according to claim 16 or 17,

wherein, if error concealment is conducted by the decoding module (110), and if the previous bitstream payload of the previous frame encodes a signal component which is tonal or harmonic, the decoding module (110) is configured to flip one or more signs of the plurality of signs of the previous spectrum to reconstruct the current spectrum, wherein a percentage value p, indicating a probability for a sign of the plurality of signs of the previous spectrum to be flipped by the decoding module (110) to reconstruct the current spectrum, is between $0\ \% \leq p \leq 50\ \%$, wherein the decoding module (110) is configured to determine the percentage value p.

19. A decoder (100) according to claim 18,

wherein the decoding module (110) is configured to increase the percentage value p depending on a number of subsequent frames;

wherein said number of subsequent frames indicates for how many subsequently partially or fully lost frames error concealment has been conducted by the decoding module (110); or wherein said number of subsequent frames indicates for how many subsequent frames error concealment in a particular error concealment mode has been conducted by the decoding module (110).

20. A decoder (100) according to claim 19,

wherein the decoding module (110) is configured to determine the percentage value p depending on a function which depends on said number of subsequent frames, said number of subsequent frames being an argument of said function.

21. A decoder (100) according to claim 20,

wherein the decoding module (110) is configured to determine the percentage value p,

such that p is 0 %, if said number of subsequent frames is smaller than a first threshold value;

such that 0 % ≤ p ≤ 50 %, if said number of subsequent frames is greater than or equal to the first threshold value and smaller than a second threshold value, and

such that p = 50 %, if said number of subsequent frames is greater than the second threshold value.

22. A decoder (100) according to claim 21,

wherein the decoding module (110) is configured to determine the percentage value p, such that the percentage value p increases linearly in the range between the first threshold value and the second threshold value depending on the number of subsequent frames.

23. A decoder (100) according to one of claims 18 to 22,

wherein, if error concealment is conducted by the decoding module (110), and if the previous bitstream payload of the previous frame does not encode a signal component which is tonal or harmonic, the decoding module (110) is configured to flip 50 % of the plurality of signs of the previous spectrum to reconstruct the current spectrum.

24. A decoder (100) according to one of the preceding claims,

wherein, if error concealment is conducted by the decoding module (110), the decoding module (110) is configured to reconstruct a current spectrum of the audio signal by conducting error concealment using a plurality of amplitudes of the previous spectrum of the audio signal depending on whether or not the previous

frame encodes a signal component which is tonal or harmonic, said plurality of amplitudes being encoded within the previous frame.

25. A decoder (100) according to claim 24,

wherein, if error concealment is conducted by the decoding module (110), the decoding module (110) is configured to attenuate the plurality of amplitudes of the previous spectrum according to a non-linear attenuation characteristic to reconstruct the current spectrum, wherein the non-linear attenuation characteristic depends on whether or not the previous frame encodes a signal component which is tonal or harmonic.

26. A decoder (100) according to claim 24 or 25,

wherein, if error concealment is conducted by the decoding module (110), and if the previous bitstream payload of the previous frame encodes a signal component which is tonal or harmonic, the decoding module (110) is configured to attenuate the plurality of amplitudes of the previous spectrum depending on a stability factor, wherein said stability factor indicates a similarity between the current spectrum and the previous spectrum; or wherein the stability factor indicates a similarity between the previous spectrum and a pre-previous spectrum of a pre-previous frame preceding the previous frame.

27. A decoder (100) according to claim 26,

wherein said pre-previous frame is a last received frame before the previous frame, which has been decoded by the decoding module (110) without conducting error concealment, or

wherein said pre-previous frame is a last received frame before the previous frame, which has been decoded by the decoding module (110) without conducting error concealment in a full frame loss concealment mode, or

wherein said pre-previous frame is a last received frame before the previous frame, which has been decoded by the decoding module (110) without conducting error concealment in a partial frame loss concealment mode or in a full frame loss concealment mode.

28. A decoder (100) according to claim 26 or 27,

wherein said stability factor indicates said similarity between the current spectrum and the previous spectrum, if the decoding module (110) is set to conduct partial frame loss concealment;

wherein said stability factor indicates said similarity between the previous spectrum and the pre-previous spectrum, if the decoding module (110) is set to conduct full frame loss concealment.

29. A decoder (100) according to one of claims 26 to 28,

wherein the decoding module (110) is configured to determine an energy of a spectral bin of the previous spectrum;

wherein the decoding module (110) is configured to determine whether or not said energy of said spectral bin is smaller than an energy threshold;

wherein, if said energy is smaller than said energy threshold, the decoding module (110) is configured to attenuate an amplitude of the plurality of amplitudes being assigned to said spectral bin with a first fading factor,

wherein, if said energy is greater than or equal to said energy threshold, the decoding module (110) is configured to attenuate said amplitude of the plurality of amplitudes being assigned to said spectral bin with a second fading factor, being smaller than the first fading factor,

wherein the decoding module (110) is configured to conduct attenuation such that by using a smaller fading factor for the attenuation of one of the plurality of amplitudes, the attenuation of said one of the amplitudes is increased.

30. A decoder (100) according to one of claims 26 to 28,

wherein the decoding module (110) is configured to determine an energy of a spectral band comprising a plurality of spectral bins of the previous spectrum;

wherein the decoding module (110) is configured to determine whether or not said energy of said spectral band is smaller than an energy threshold;

wherein, if said energy is smaller than said energy threshold, the decoding module (110) is configured to attenuate an amplitude of the plurality of amplitudes being assigned to said spectral bin of said spectral band with a first fading factor,

wherein, if said energy is greater than or equal to said energy threshold, the decoding module (110) is configured to attenuate said amplitude of the plurality of amplitudes being assigned to said spectral bin of said spectral band with a second fading factor, being smaller than the first fading factor,

wherein the decoding module (110) is configured to conduct attenuation such that by using a smaller fading factor for the attenuation of one of the plurality of amplitudes, the attenuation of said one of the amplitudes is increased.

31. A decoder (100) according to claim 30, further depending on claim 19,

wherein the decoding module (110) is configured to determine the first fading factor such that, depending on said number of subsequent frames, the first fading factor becomes smaller, and

wherein the decoding module (110) is configured to determine the second fading factor such that, depending on said number of subsequent frames, the second fading factor becomes smaller.

32. A decoder (100) according to claim 31,

wherein the decoding module (110) is configured to determine the first fading factor and the second fading factor, so that

```
cum_fading_slow  = 1,
cum_fading_fast  = 1,
```

and

if the current frame is a first frame among the subsequent frames, and so that

if the current frame is one of the frames succeeding the first frame among the subsequent frames, the first fading factor and the second fading factor are determined depending on said number of subsequent frames according to:

```
cum_fading_slow  = cum_fading_slow  * slow;
cum_fading_fast  = cum_fading_fast  * fast;
```

wherein `cum_fading_slow` on the right side of the formula is the first fading factor of the previous frame,

wherein `cum_fading_slow` on the left side of the formula is the first fading factor of the current frame,

wherein `cum_fading_fast` on the right side of the formula is the second fading factor of the previous frame,

wherein `cum_fading_fast` on the left side of the formula is the second fading factor of the current frame,

wherein 1 > slow > fast > 0.

33. A decoder (100) according to claim 32, wherein 1 > slow > fast > 0.3.

34. A decoder (100) according to one of claims 29 to 33, further depending on claim 19,

wherein the decoding module (110) is configured to determine said energy threshold,

such that said energy threshold is equal to a first energy value, if said number of subsequent frames is smaller than a third threshold value;

such that said energy threshold is smaller than said first energy value and is greater than a second energy value, if said number of subsequent frames is greater than or equal to the third threshold value and smaller than a fourth threshold value; and

such that said energy threshold is equal to said second energy value, if said number of subsequent frames is greater than the fourth threshold value.

35. A decoder (100) according to claim 34,

wherein the decoding module (110) is configured to determine the energy threshold, such that the energy threshold decreases linearly in the range between the third threshold value and the fourth threshold value depending on the number of subsequent frames.

36. A decoder (100) according to claim 1 or according to one of claims 15 to 35,

wherein the decoding module (110) comprises a decoded spectrum storage module (330) configured for storing a decoded spectrum of the audio signal, wherein the decoded spectrum storage module (330) is configured to provide a last non-full frame loss concealment decoded spectrum, and

wherein the decoding module (110) comprises a fade-out and sign scrambling module (340) being configured for fade-out and sign scrambling on spectral lines of the spectrum.

37. A decoder (100) according to claim 36,

wherein the decoding module (110) comprises a quantized spectrum storage module (310) configured for storing a quantized spectrum of the audio signal, wherein the quantized spectrum storage module (310) is configured to provide a last non-full frame loss concealment quantized spectrum, and

wherein the decoding module (110) comprises a partial frame repetition & rescaling module (320) configured for partial frame repetition and rescaling, wherein the partial frame repetition & rescaling module (320) is configured to complement the spectrum by adding spectral lines, which could not be decoded by the decoding module (110), wherein the partial frame repetition & rescaling module (320) is configured to re-scale said spectral lines.

38. A decoder (100) according to one of claims 2 to 14,

wherein the decoding module (110) comprises a quantized spectrum storage module (310) configured for storing a quantized spectrum of the audio signal, wherein the quantized spectrum storage module (310) is configured to provide a last non-full frame loss concealment quantized spectrum, and

wherein the decoding module (110) comprises a decoded spectrum storage module (330) configured for storing a decoded spectrum of the audio signal, wherein the decoded spectrum storage module (330) is configured to provide a last non-full frame loss concealment decoded spectrum.

39. A method for decoding a current frame to reconstruct an audio signal, wherein the audio signal is encoded within the current frame, wherein the current frame comprises a current bitstream payload, wherein the current bitstream payload comprises a plurality of payload bits, wherein the plurality of payload bits encodes a plurality of spectral lines of a spectrum of the audio signal, wherein each of the payload bits exhibits a position within the bitstream payload, wherein the method comprises:

reconstructing the audio signal, wherein, in an error concealment mode, reconstructing the audio signal is conducted by conducting error concealment for those spectral lines of the spectrum of the audio signal, which exhibit a frequency being greater than a threshold frequency; and/or wherein, if error concealment is conducted, error concealment is conducted in a way that depends on whether or not a previous bitstream payload of a previous frame preceding the current frame encodes a signal component of the audio signal which is tonal or harmonic; and

outputting the audio signal.

40. A computer program for implementing the method of claim 39 when being executed on a computer or signal processor.

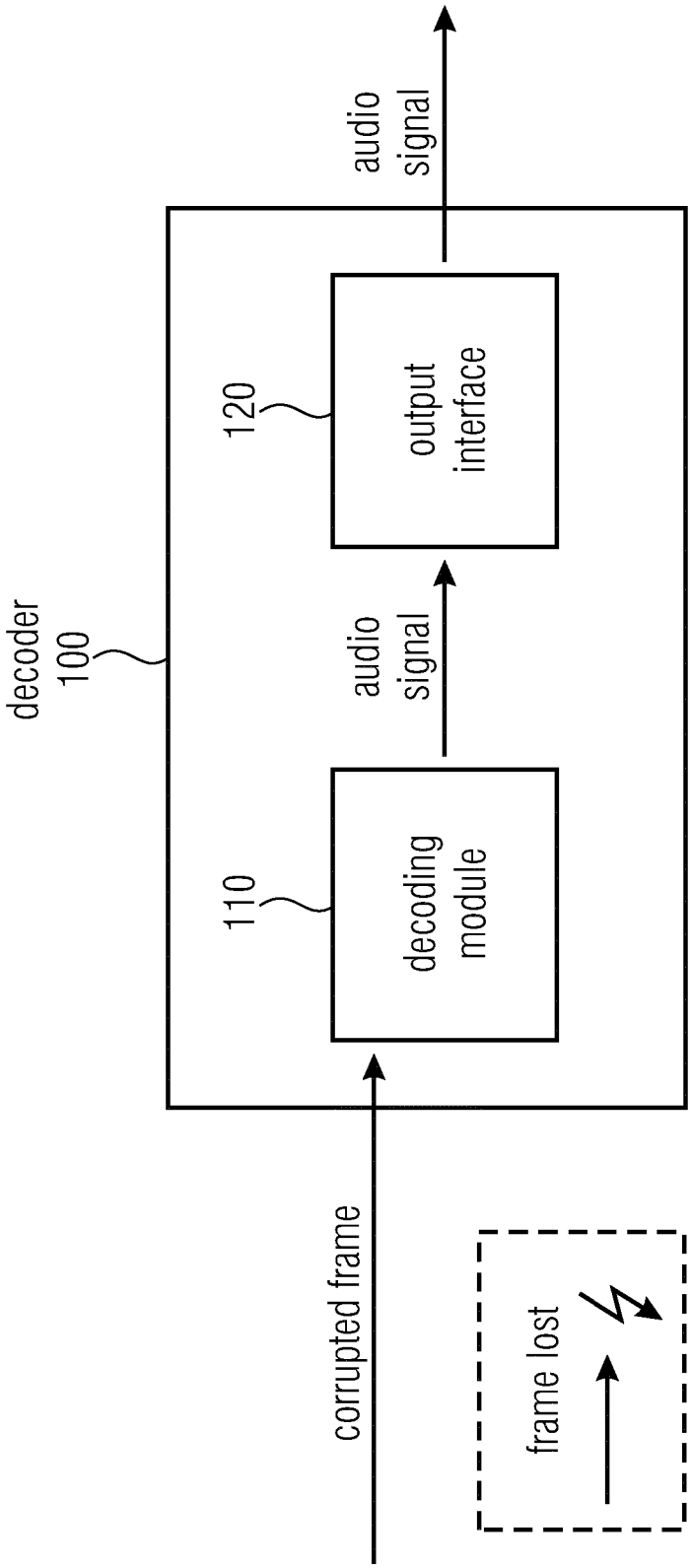
decoder
100
110
decoding
module
audio
signal
120
output
interface
audio
signal
corrupted frame
frame lost

Fig. 1

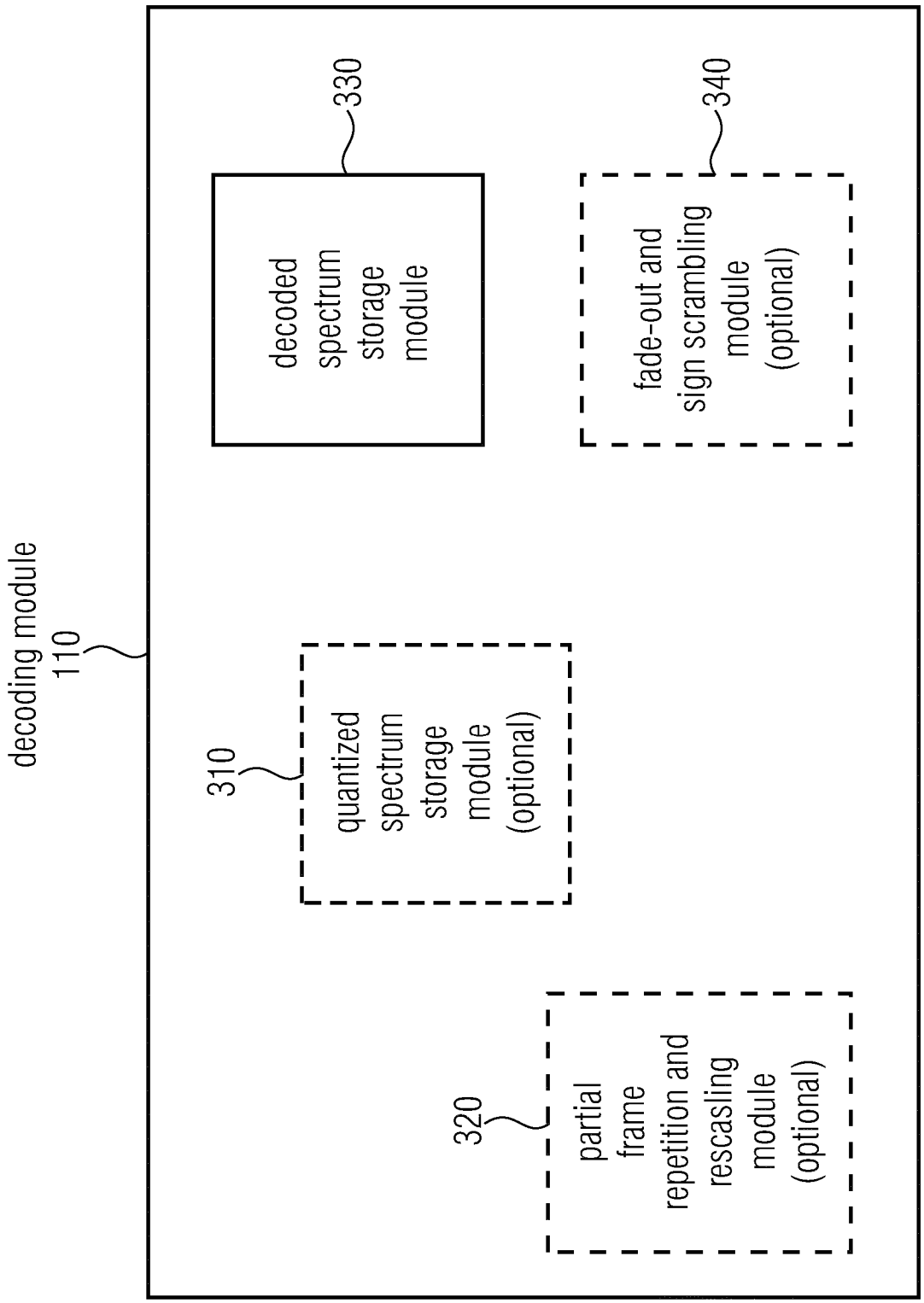
decoding module
110
310
quantized spectrum storage module (optional)
320
partial frame repetition and rescasling module (optional)
330
decoded spectrum storage module
340
fade-out and sign scrambling module (optional)

Fig. 2

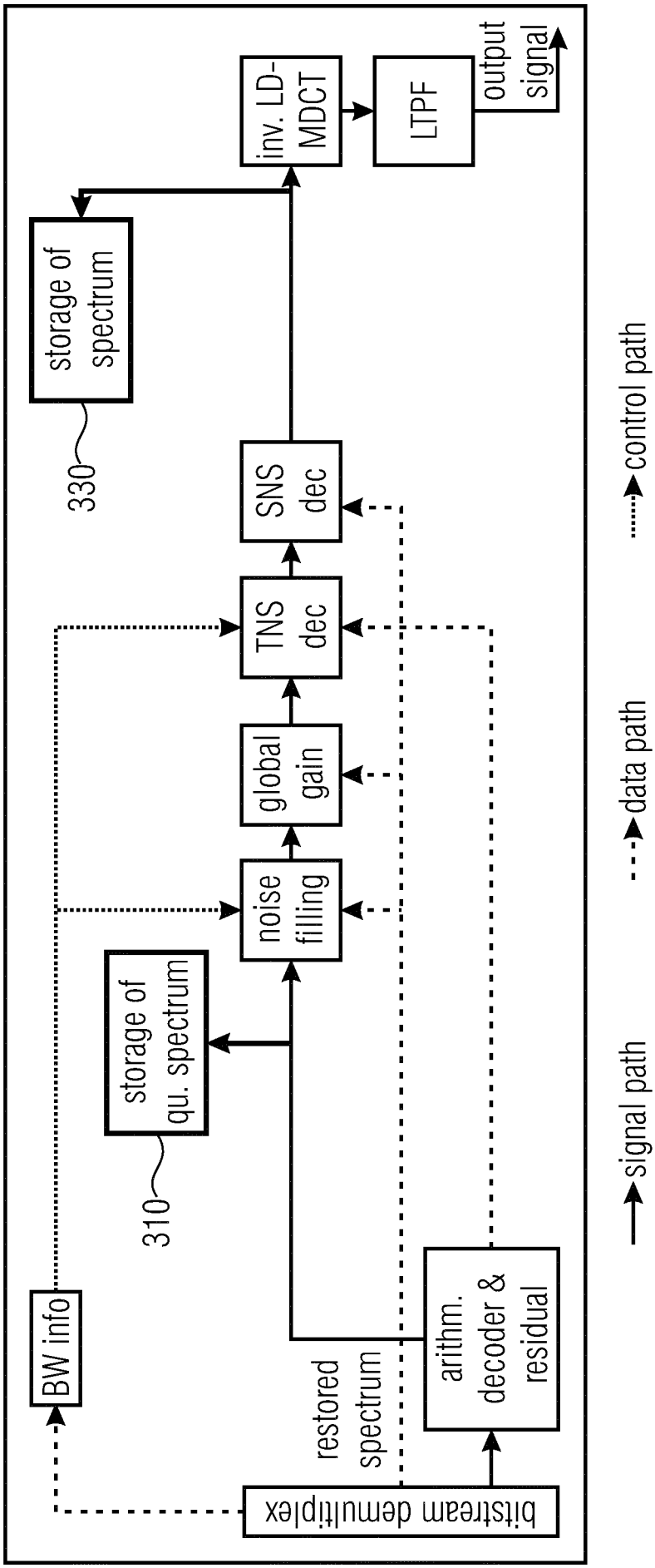
bitstream demultiplex
BW info
arithm. decoder & residual
restored spectrum
storage of qu. spectrum
310
noise filling
global gain
TNS dec
SNS dec
storage of spectrum
330
inv. LD-MDCT
LTPF
output signal
signal path
data path
control path

Fig. 3

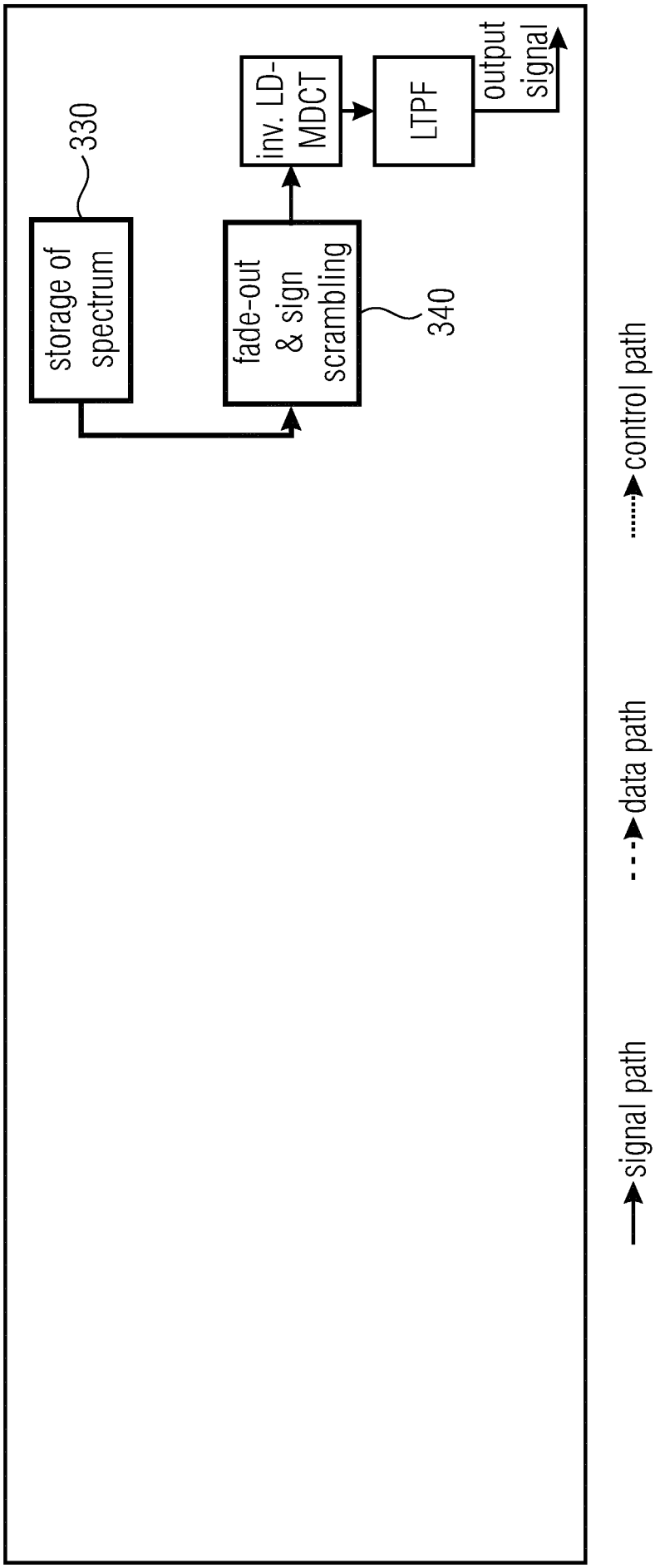
storage of spectrum
330
fade-out & sign scrambling
340
inv. LD-MDCT
LTPF
output signal
signal path
data path
control path

Fig. 4

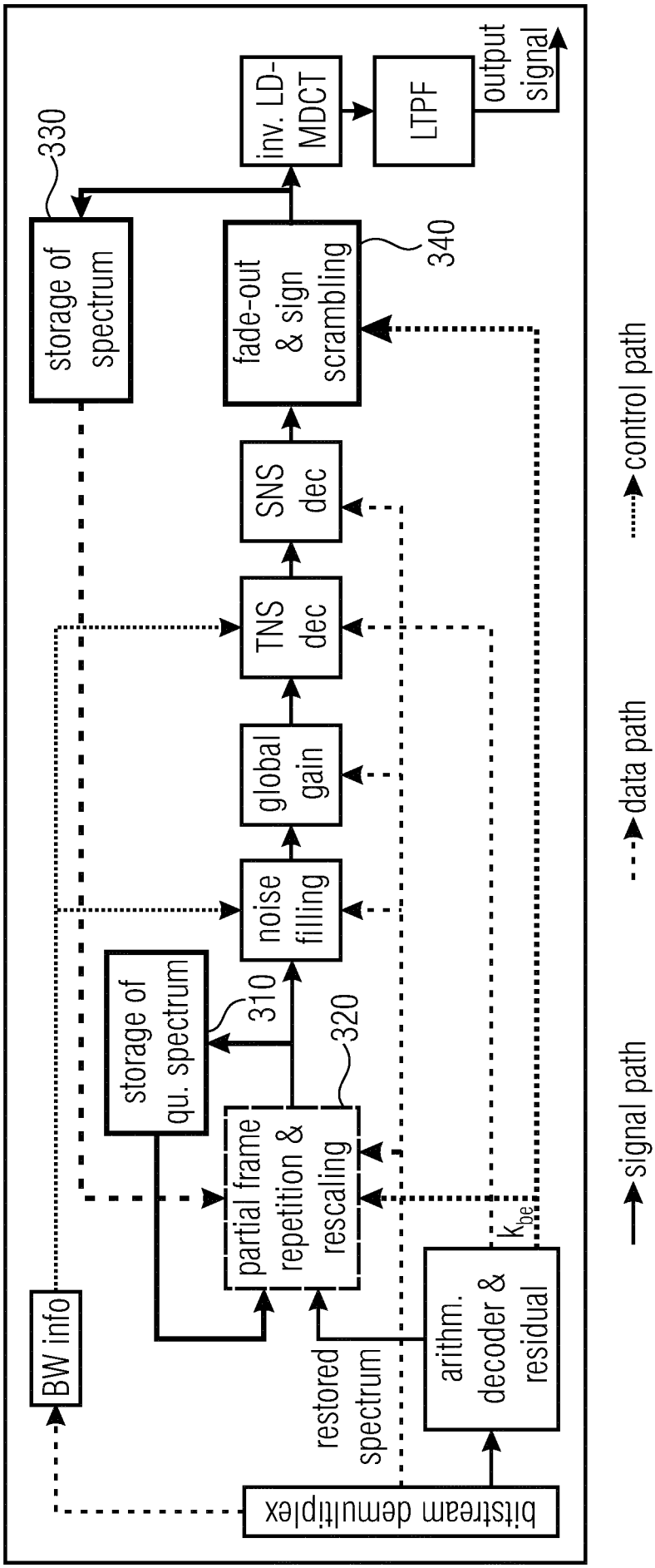
bitstream demultiplex
BW info
restored spectrum
arithm. decoder & residual
k_{be}
partial frame repetition & rescaling
320
storage of qu. spectrum
310
noise filling
global gain
TNS dec
SNS dec
fade-out & sign scrambling
340
storage of spectrum
330
inv. LD-MDCT
LTPF
output signal
signal path
data path
control path

Fig. 5

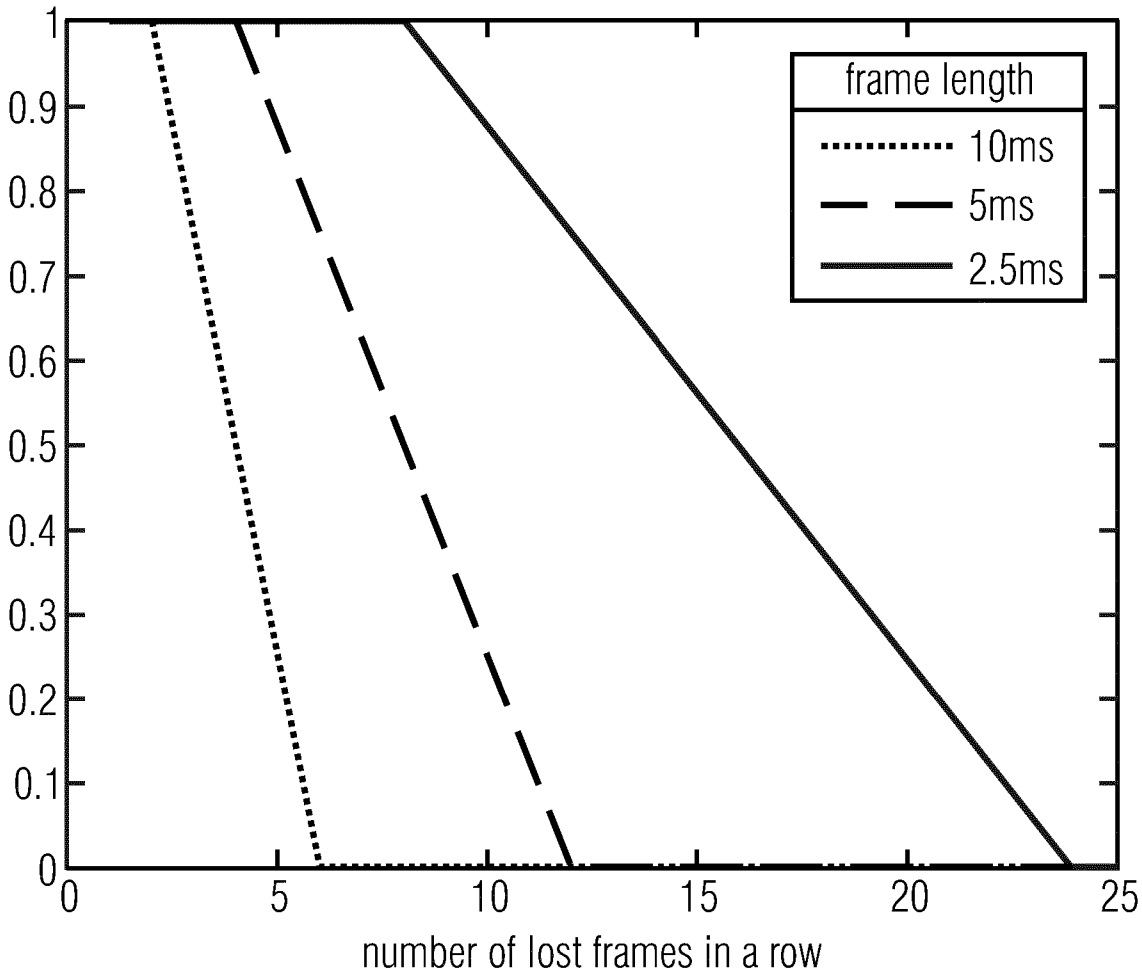
frame length
10ms
5ms
2.5ms
1
0.9
0.8
0.7
0.6
0.5
0.4
0.3
0.2
0.1
0
0
5
10
15
20
25
number of lost frames in a row

Fig. 6

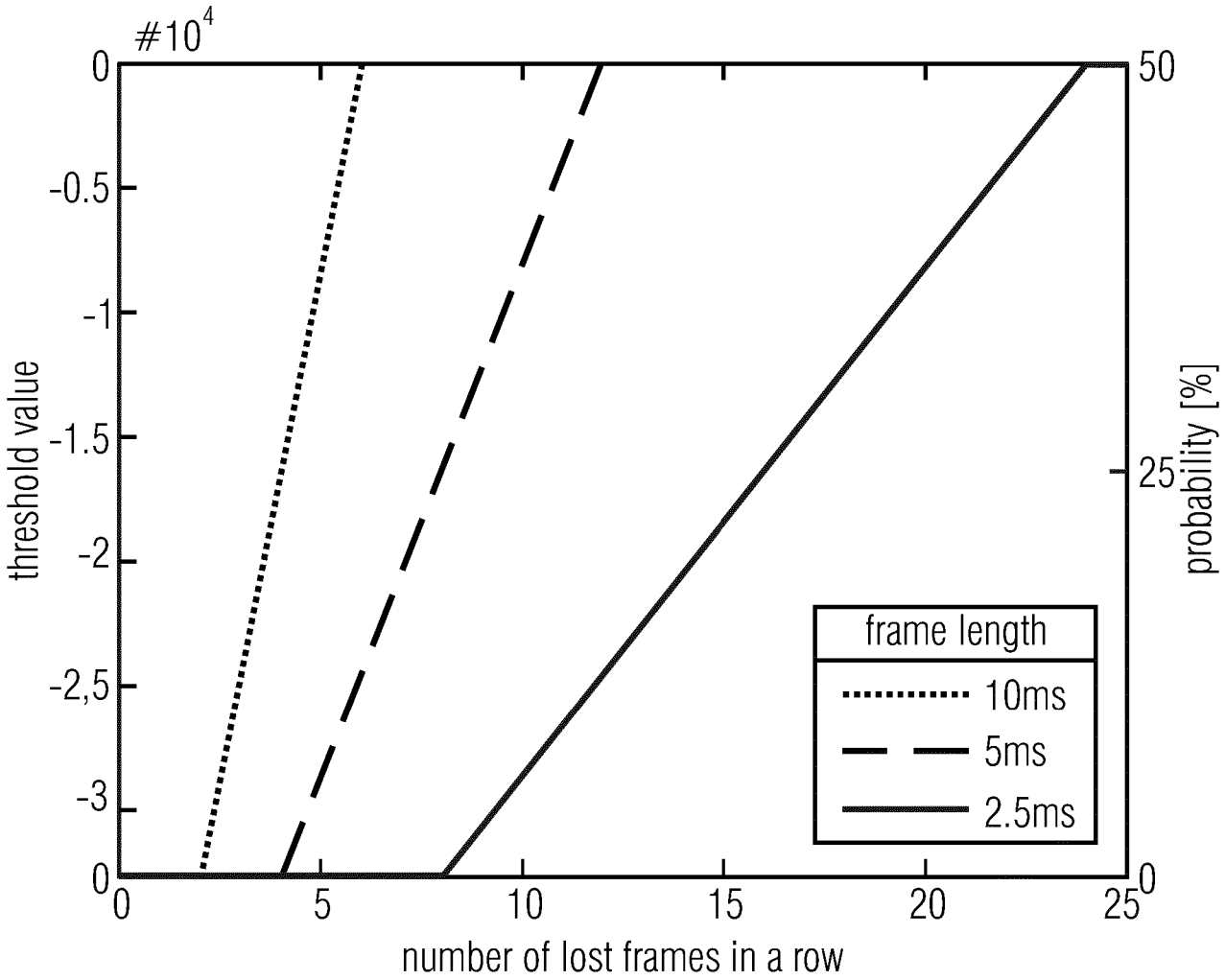
#10^4
0
-0.5
-1
-1.5
-2
-2,5
-3
0
threshold value
50
25
0
probability [%]
0
5
10
15
20
25
number of lost frames in a row
frame length
10ms
5ms
2.5ms

Fig. 7

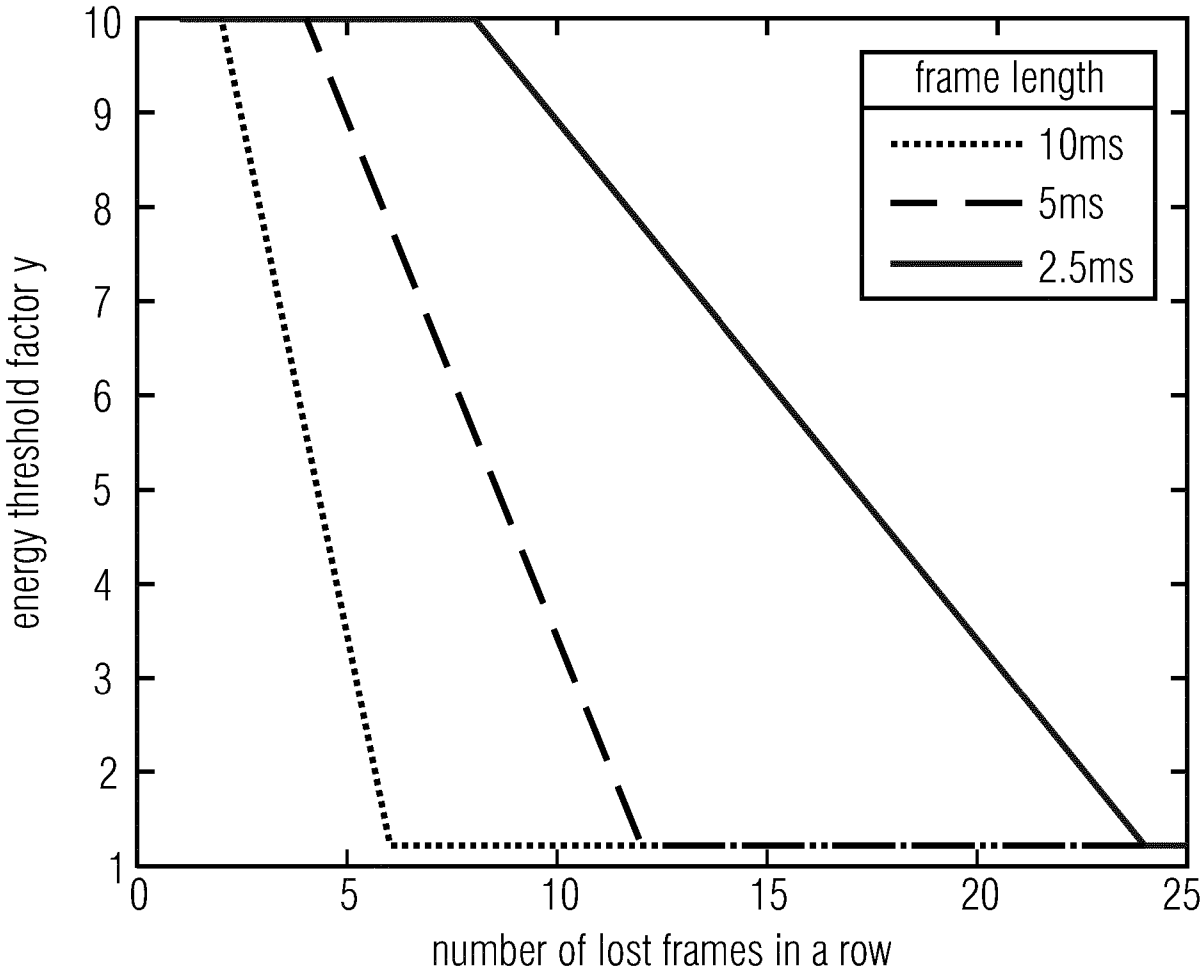
frame length
10ms
5ms
2.5ms
energy threshold factor y
number of lost frames in a row
10
9
8
7
6
5
4
3
2
1
0
5
10
15
20
25

Fig. 8

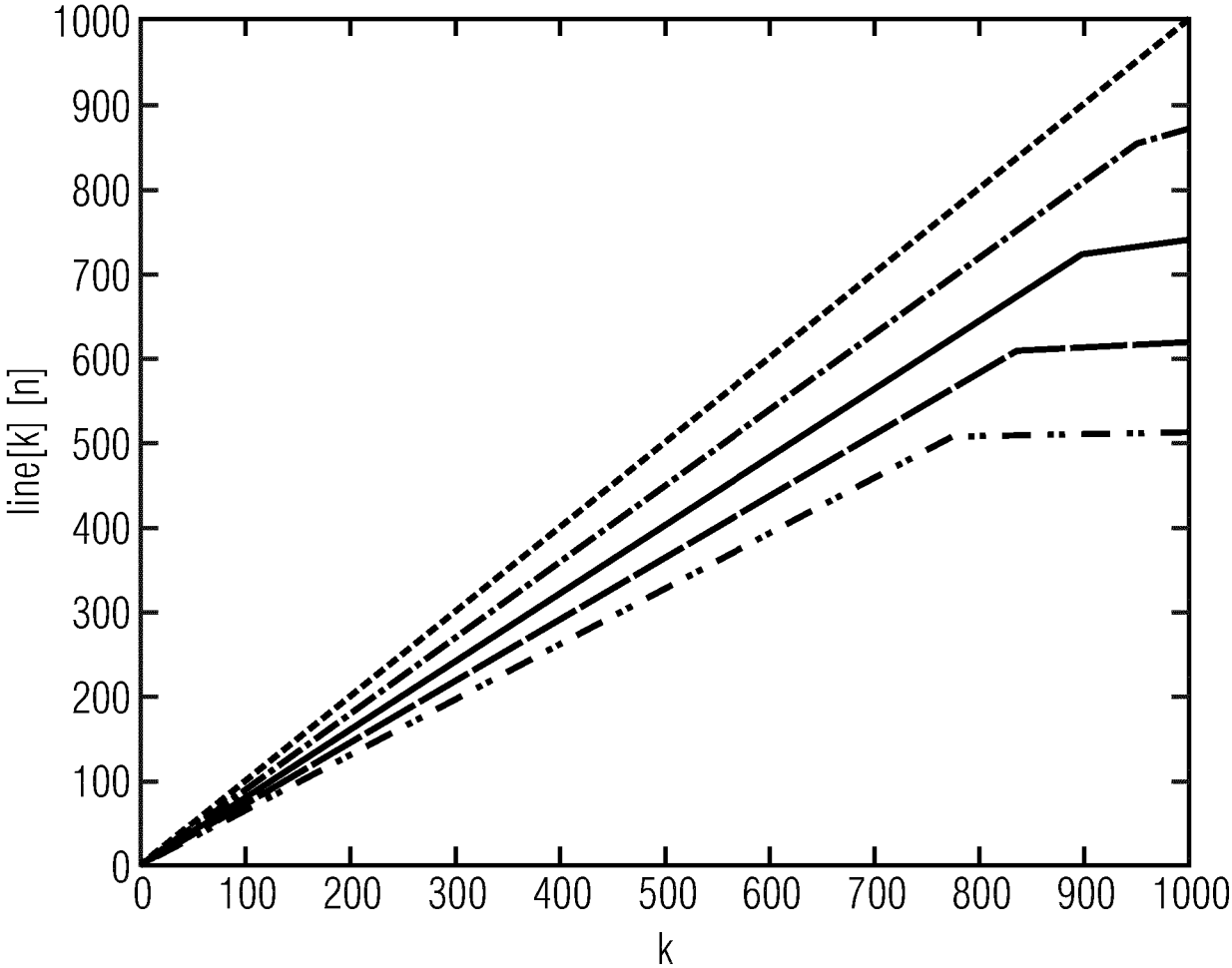

threshold[n]; slow[n]; fast[n]
n=0: inf*frameEnergy; 1.0000; 1.0000
n=1: 2.7*frameEnergy; 0.9000; 0.4000
n=2: 2.4*frameenergy; 0.8100; 0.1600
n=3: 2.1*frameEnergy; 0.7290; 0.0640
n=4: 1.8*frameEnergy; 0.6561; 0.0256

Fig. 9

INTERNATIONAL SEARCH REPORT

International application No
PCT/EP2019/065172

A. CLASSIFICATION OF SUBJECT MATTER

INV. G10L19/005 H04L1/00
ADD. G10L19/02

According to International Patent Classification (IPC) or to both national classification and IPC

B. FIELDS SEARCHED

Minimum documentation searched (classification system followed by classification symbols)

G10L H04L

Documentation searched other than minimum documentation to the extent that such documents are included in the fields searched

Electronic data base consulted during the international search (name of data base and, where practicable, search terms used)

EPO-Internal, WPI Data

C. DOCUMENTS CONSIDERED TO BE RELEVANT

Category*	Citation of document, with indication, where appropriate, of the relevant passages	Relevant to claim No.
X Y A	US 2010/115370 A1 (LAAKSONEN LASSE JUHANI [FI] ET AL) 6 May 2010 (2010-05-06) paragraph [0041] - paragraph [0056]; figures 1,4,6 -----	1,24,25, 39,40 2-8,38 9-23, 26-37
X Y A	US 2019/005967 A1 (LECOMTE JÉRÉMIE [US] ET AL) 3 January 2019 (2019-01-03) paragraph [0270] - paragraph [0277] paragraph [0294] - paragraph [0303] claims 1,4,8 -----	1,24,25, 39,40 2-8,38 9-23, 26-37

-/--

[X] Further documents are listed in the continuation of Box C.

[X] See patent family annex.

* Special categories of cited documents :

"A" document defining the general state of the art which is not considered to be of particular relevance

"E" earlier application or patent but published on or after the international filing date

"L" document which may throw doubts on priority claim(s) or which is cited to establish the publication date of another citation or other special reason (as specified)

"O" document referring to an oral disclosure, use, exhibition or other means

"P" document published prior to the international filing date but later than the priority date claimed

"T" later document published after the international filing date or priority date and not in conflict with the application but cited to understand the principle or theory underlying the invention

"X" document of particular relevance; the claimed invention cannot be considered novel or cannot be considered to involve an inventive step when the document is taken alone

"Y" document of particular relevance; the claimed invention cannot be considered to involve an inventive step when the document is combined with one or more other such documents, such combination being obvious to a person skilled in the art

"&" document member of the same patent family

Date of the actual completion of the international search	Date of mailing of the international search report
24 October 2019	04/11/2019

Name and mailing address of the ISA/	Authorized officer
European Patent Office, P.B. 5818 Patentlaan 2 NL - 2280 HV Rijswijk Tel. (+31-70) 340-2040, Fax: (+31-70) 340-3016	Virette, David

1

Form PCT/ISA/210 (second sheet) (April 2005)

INTERNATIONAL SEARCH REPORT

International application No
PCT/EP2019/065172

C(Continuation). DOCUMENTS CONSIDERED TO BE RELEVANT

Category*	Citation of document, with indication, where appropriate, of the relevant passages	Relevant to claim No.
X	ROSE KENNETH ET AL: "A Frame Loss Concealment Technique for MPEG-AAC", AES CONVENTION 120; MAY 2006, AES, 60 EAST 42ND STREET, ROOM 2520 NEW YORK 10165-2520, USA, 1 May 2006 (2006-05-01), XP040507556,	1,16,17, 24,25, 36,37, 39,40
Y	page 1, paragraph 1. - page 2	2-8,38
A	page 6, paragraph 4. - page 10, paragraph 5.; figure 1	9-15, 18-23, 26-35

X	ROSE KENNETH ET AL: "Frame Loss Concealment for Audio Decoders Employing Spectral Band Replication", AES CONVENTION 121; OCTOBER 2006, AES, 60 EAST 42ND STREET, ROOM 2520 NEW YORK 10165-2520, USA, 1 October 2006 (2006-10-01), XP040507885,	1,24,25, 39,40
Y	page 1, paragraph 1. - page 2	2-8,38
A	page 4, paragraph 3. - page 10, paragraph 4.2	9-23, 26-37

X	"Digital Audio Broadcasting (DAB); Transport of Advanced Audio Coding (AAC) audio", TECHNICAL SPECIFICATION, EUROPEAN TELECOMMUNICATIONS STANDARDS INSTITUTE (ETSI), 650, ROUTE DES LUCIOLES ; F-06921 SOPHIA-ANTIPOLIS ; FRANCE, vol. BROADCAS, no. V1.2.1, 1 May 2010 (2010-05-01), XP014046351,	1-8,16, 17,36-40
A	page 18, paragraph Annex A - page 21, paragraph A.2	9-15, 18-35

Y	TALEB A ET AL: "Partial Spectral Loss Concealment in Transform Coders", 2005 IEEE INTERNATIONAL CONFERENCE ON ACOUSTICS, SPEECH, AND SIGNAL PROCESSING - 18-23 MARCH 2005 - PHILADELPHIA, PA, USA, IEEE, PISCATAWAY, NJ, vol. 3, 18 March 2005 (2005-03-18), pages 185-188, XP010792360, DOI: 10.1109/ICASSP.2005.1415677 ISBN: 978-0-7803-8874-1 page 185, paragraph Abstract - paragraph 1. INTRODUCTION; figure 1	2-8,38

1

INTERNATIONAL SEARCH REPORT

Information on patent family members

International application No
PCT/EP2019/065172

Patent document cited in search report	Publication date	Patent family member(s)	Publication date
US 2010115370 A1	06-05-2010	AU 2009256551 A1	17-12-2009
		CN 102057424 A	11-05-2011
		EP 2301015 A1	30-03-2011
		KR 20110040835 A	20-04-2011
		RU 2010154191 A	20-07-2012
		TW 201005730 A	01-02-2010
		US 2010115370 A1	06-05-2010
		WO 2009150290 A1	17-12-2009
		ZA 201100279 B	27-06-2012
US 2019005967 A1	03-01-2019	BR 112018067944 A2	03-09-2019
		CA 3016837 A1	14-09-2017
		CN 109155133 A	04-01-2019
		EP 3427256 A1	16-01-2019
		JP 2019511738 A	25-04-2019
		KR 20180118781 A	31-10-2018
		US 2019005967 A1	03-01-2019
		WO 2017153006 A1	14-09-2017