Aug. 1, 1950 F. HAUT ET AL 2,517,483

FUEL INJECTION PUMP

Filed July 31, 1946 2 Sheets-Sheet 1

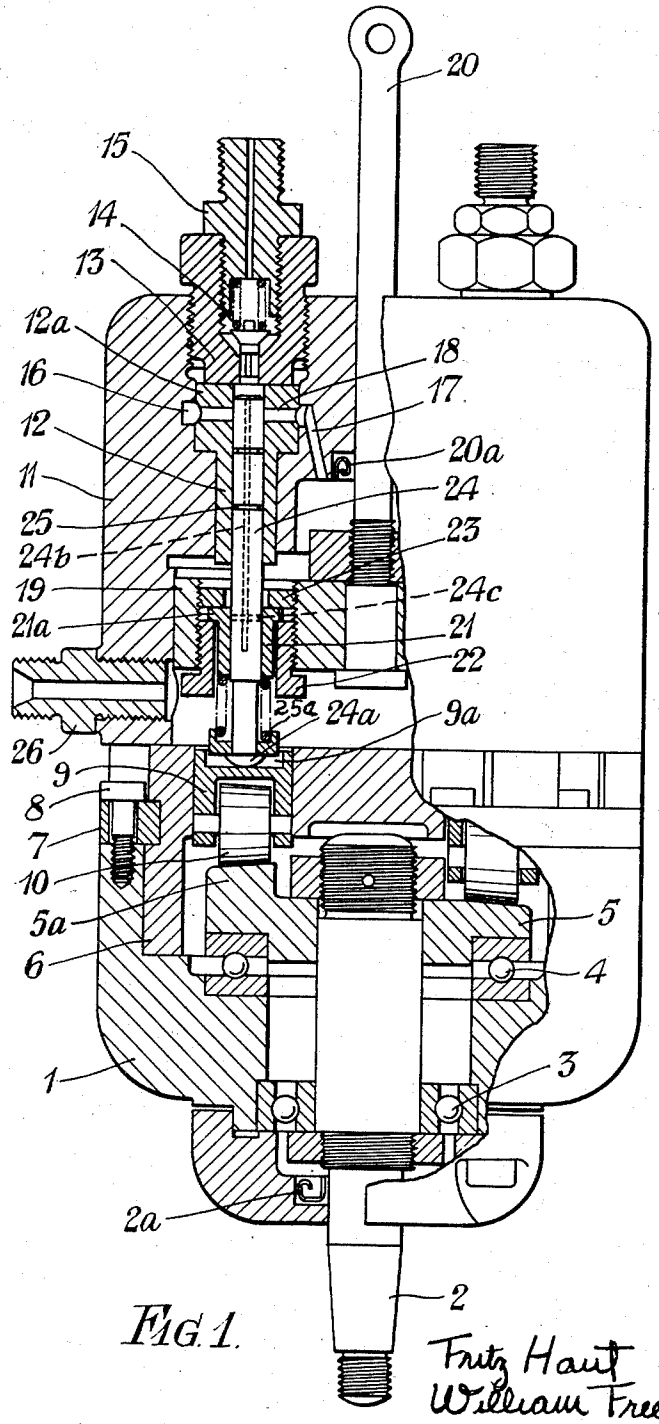

FIG. 1.

Fritz Haut
William Freedlander
by Peck & Peck
Attorneys.

Aug. 1, 1950 F. HAUT ET AL 2,517,483

FUEL INJECTION PUMP

Filed July 31, 1946 2 Sheets-Sheet 2

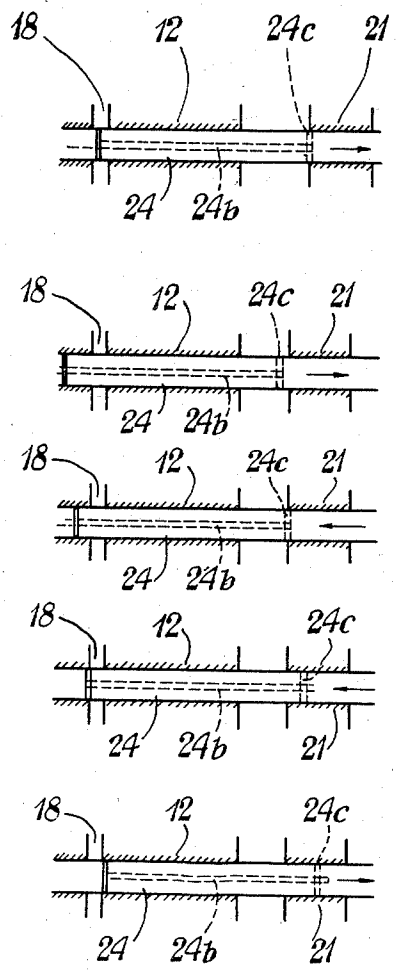

FIG 2.

Fritz Haut
William Friedlander
by Peck & Peck
attorneys

Patented Aug. 1, 1950 2,517,483

UNITED STATES PATENT OFFICE

2,517,483

FUEL INJECTION PUMP

Fritz Haut and William Friedlander, London, England, assignors, by mesne assignments, to Mono-Cam Limited, London, England, a company of Great Britain

Application July 31, 1946, Serial No. 687,368
In Great Britain May 24, 1945

Section 1, Public Law 690, August 8, 1946
Patent expires May 24, 1965

3 Claims. (Cl. 103—41)

1

The invention relates to fuel injection pumps for internal combustion engines, particularly Diesel engines, and has the main objects to provide a pump which allows accurate dosage of the fuel injected in exactly equal quantities for all cylinders of a multi-cylinder engine, and the accurate timing of the injection.

The fuel injection pump according to the invention belongs to the kind in which the individual pumps are arranged substantially parallel to the pump shaft and the individual plungers are operated by a common front cam, and in which the ends of the barrel communicate, on the one hand, with the fuel supply and, on the other hand, through non-return valves or directly, with the individual injectors of the internal combustion engine, and is characterized in that a shunt to the suction side of the pump unit is provided for each individual pump by bores in the plunger the openings of which are controlled by sleeves arranged in a common plate member the axial position of which is controllable for the purpose of varying the length of the effective delivery part, of the stroke for all plungers uniformly.

Preferably the sleeves are arranged for individual axial adjustment in and with respect to the common plate member. In order to overcome the problem of concentricity of these sleeves and the barrels, these sleeves are preferably located in oversize holes of the common plate member.

While the above mentioned sleeves are adapted to control the amount of delivery, the timing of the delivery is controlled in a manner not forming part of the invention by means of slide members carrying rollers in contact with the cam surface which slide members are housed in a common member capable of being angularly adjusted with respect to said cam.

The invention is illustrated by way of example in the accompanying drawings of which Fig. 1 is an elevation partly in section, and Fig. 2 shows the different characteristic positions of the plungers in a diagrammatic way.

Referring first to Fig. 1 the body of the pump unit is denoted 1 and the pump shaft 2 is fulcrumed in this body by means of ball bearings such as a radial bearing 3 and a thrust bearing 4. Shaft 2 carries at its inner end the cam 5 which has a single, axial, protrusion 5a. A cup shaped member 6 is centered in the body 1 and

2

held in position by means of a split ring 7 and a number of head screws 8 which hold the ring 7 against the body 1. The ring 7 is embedded into a circular groove of the cup shaped member 6.

Slide members 9 are guided in holes of the base of the said cup shaped member, and in each slide member 9 a roller 10, preferably in the shape of a truncated cone, is pivoted so as to engage with its circumference the cam surface 5, 5a.

The lid 11 of the pump body 1 is held in a position concentrical with shaft 2 by means of bolts (not shown) so as to give a liquid-tight fit against the outer face of the bottom of the cup shaped member 6. Pump barrels 12 are located from outside in said lid 11 on the same pitch circle with, and at positions opposite to, the slide members 9. These barrels are held in position by means of sockets 13 screwed into the lid 11 thus pressing the enlarged heads 12a of the barrels into counter-bored recesses. Spring loaded non-return valves 14 are housed inside the sockets 13 and retained there by means of the adaptors 15. These non-return valves are each seated against a bore leading into the end face of the barrels 12. A circular recess 16 around each barrel head 12a is connected, through a duct 17, with the interior of the lid 11 and, through ducts 18, with the interior of the individual barrel head 12a.

A ring or plate member 19 is slidably arranged in the interior of the lid 11 so that it can be shifted in an axial direction by means of an operating rod 20 which is concentric with the shaft 2, at the opposite end of the pump unit.

Both the shaft 2 and the rod 20, which are movable parts operated from outside, are tightened by means of glands 2a and 20a, respectively.

Sleeves 21 are housed in oversize bores of sockets 22 and are clamped with their flanges 21a between the end faces of said sockets 22 and a retaining ring 23, both the socket and the ring being screwed, from opposite sides, into the same threaded bore of the plate member 19, on the same pitch circle with, and opposite to, the barrels 12 and the slide members 9.

A plunger 24 is slidably arranged with a close fit within each barrel 12 and corresponding sleeve 21. Between the head 24a and the end face of the sleeve 21 there is a coiled spring 25a that forces the head 24a into contact with the corresponding slide member 9. There is a central

bore 24*b* and a cross bore 24*c* in each plunger 24 the purpose of which will be explained with reference to Fig. 2. Labyrinth grooves 25 are arranged on the circumference of each piston 24.

The body 1 may be equipped with an integral foot plate (not shown) and may be attached in the vertical position as shown, or in any other convenient position, to the internal combustion engine. A nipple 26 connects the interior of the lid 11 with the fuel supply, whereas the nipples or adaptors 15 are connected with the injector in the individual cylinders of the internal combustion engine.

The operating rod 20 is connected with what would be called the "throttle control" in a carburetter fed engine. The cup shaped meber 6, while being retained in axial relation to the body 1 as described, can be turned about the central axis of the unit by means of a lever (not shown) which is connected with the timing control of the engine. Recesses 9*a* in the slide members 9 are wide enough to allow angular adjustment of the member 6 with respect to pistons 24.

The operation of the pump will be explained with reference to Fig. 2 in which the movement of the piston is illustrated in five diagrams drawn for convenience of space at right angles to the position of the piston in Fig. 1. Corresponding parts are denoted with the same numerals as in Fig. 1, to which reference will be also made where necessary.

The lowermost diagram of Fig. 2 shows the piston 24 in a position corresponding to the roller 10 bearing on the flat part of the cam surface 5. The inlet ports 18 (which are connected through port 17 with the interior of the lid 11, Fig. 1) are communicating with the interior of the barrel 12, and the non-return valve 14 is resting on its seat, closing the outlet from barrel 12 through the adapter 15 (Fig. 1).

The second diagram of Fig. 2 corresponds to a position in which the roller 10 has started to ride on the sloping-up portion of the cam 5*a*. The piston head has already blocked the inlet ports 18 while the cross bore 24*c* is still within the sleeve 21. Consequently, the plunger forces the liquid against the non-return valve 14 which is lifted off its seat when the piston 24 continues its path in the direction of the arrow, i. e. to the left in Fig. 2, diagrams 2 and 3 from below, and the delivery of fluid begins.

The middle diagram shows the piston 24 in a position when the roller 10 has still further continued its relative movement along the sloping up portion of cam 5*a* which in reality is the moving part, being turned by shaft 2. It will be seen that in this diagram the cross bore 24*c* has just begun to clear the edge of the sleeve 21 thus allowing the liquid to escape from the barrel 12 through the longitudinal bore 24*b* and the said cross bore 24*c* back into the interior of the lid 11. This position therefore marks the end of the delivery period, and the non-return valve 14 is again moving towards its seat under the action of its spring.

In the position represented by the second diaphragm from above of Fig. 2 the piston has reached its dead centre position corresponding to the roller 10 having reached the peak of the cam 5*a*. There is, however, no delivery on the last stretch of stroke as the interior of the barrel 12 is in communication with that of the lid 11, as described above.

In the uppermost diagram of Fig. 2 the roller

10 is assumed to be on the downward slope of cam 5*a* and the piston head 24*a* following up the movement of the slide member 9 under the action of the spring between said piston head and the end of sleeve 21. The piston is just clearing the inlet ports 18, and the cross bore 24*c* is at the same time disappearing within the sleeve 21. Consequently liquid is sucked from the interior of the lid 11 through ports 17, 18 into the barrel 12 on the piston 24 continuing its travel in the direction of the arrow, i. e. to the right hand side in the diagram under consideration.

Eventually the other dead centre position of the piston, represented in the lowermost diagram of Fig. 2 is reached again, as soon as the roller has reached the flat portion of cam 5.

As the shaft 2 rotates the cam 5*a* is operating one of the pistons 24 after the other in cyclic succession. It is now clear that by turning the cup shaped member 6 about the central axis the timing of the moments when these operations occur is altered.

By shifting the plate member 19 by means of the operating rod 20 the position of the sleeves 21 with respect to the pistons 24 is altered, and consequently the moment of covering and uncovering the cross bore 24*c*. Thus the length of the delivery period of the individual pumps of the unit is controlled in a uniform manner.

The liquid forced through the nipples 15 is replaced by liquid supplied through nipple 26 (Fig. 1) which is shown to be of wider inner diameter in order to keep resistance on the suction side as low as possible.

What we claim is:

1. A fuel injection pump for internal combustion engines comprising a substantially cylindrical casing having an internal fuel chamber, means for suplying fuel to the chamber, a plurality of pump barrels mounted within the casing parallel with the axis thereof and uniformly spaced in a circle about the said axis, each pump barrel communicating at one end with the fuel chamber and at the other end with an individual injector of the internal combustion engine, a pump plunger reciprocably fitted into each pump barrel, a drive shaft disposed axially of the casing, a common front cam secured on the drive shaft, resilient means normally urging the pump plungers outwards of the pump barrels, means operated by the cam for urging the pump plungers inwards of their respective pump barrels in succession for forcing fuel from the barrels to the cylinders of the engine, a port for each barrel opening into the space within the barrel which is swept by the plunger as it reciprocates therein, passages leading from the fuel chamber to the respective ports, an axial bore in each plunger permanently open at one end to the swept space in the respective pump barrel, a transverse bore in each plunger establishing communication between the other end of the axial bore therein and the surface of the plunger, a sleeve fitted closely on each plunger to determine the point in the stroke thereof at which the transverse bore in the plunger is placed in communication with the fuel chamber, a plate member located within the fuel chamber and engaged with all the said sleeves, and means for varying the position of the plate member axially of the casing in order to adjust the sleeves relative to the respective plungers simultaneously and thereby to vary the effective delivery part of the stroke for all plungers uniformly.

2. A fuel injection pump as claimed in claim 1, in which means is provided for axially adjusting the sleeves individually with respect to the plate member with which they are engaged.

3. A fuel injection pump as claimed in claim 1, in which the plate member is formed with apertures of a greater diameter than the sleeves, a sleeve is accommodated in each aperture, and means is provided for securing each sleeve in its respective aperture at any one of a number of different positions of axial adjustment relative to the plate member.

FRITZ HAUT.
WILLIAM FRIEDLANDER.

REFERENCES CITED

The following references are of record in the file of this patent:

UNITED STATES PATENTS

Number	Name	Date
2,166,876	Purdy	July 18, 1939
2,251,783	Davis	Aug. 5, 1941
2,282,562	Cole	May 12, 1942