May 13, 1947. W. BLANKNER 2,420,410

PAVEMENT REPAIRING AND THE LIKE

Filed Aug. 2, 1940 2 Sheets-Sheet 1

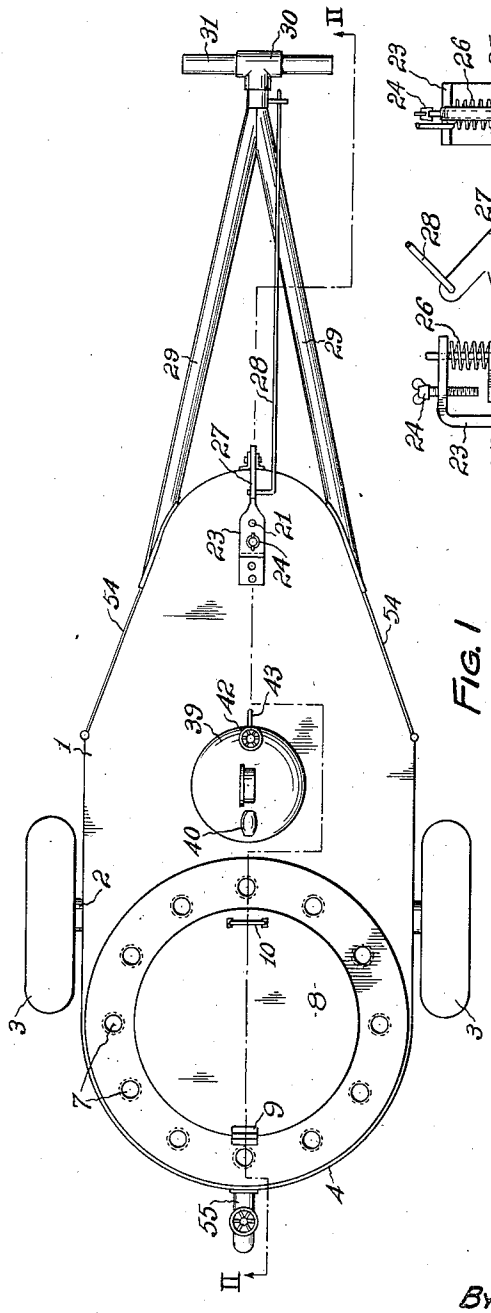

FIG. 1

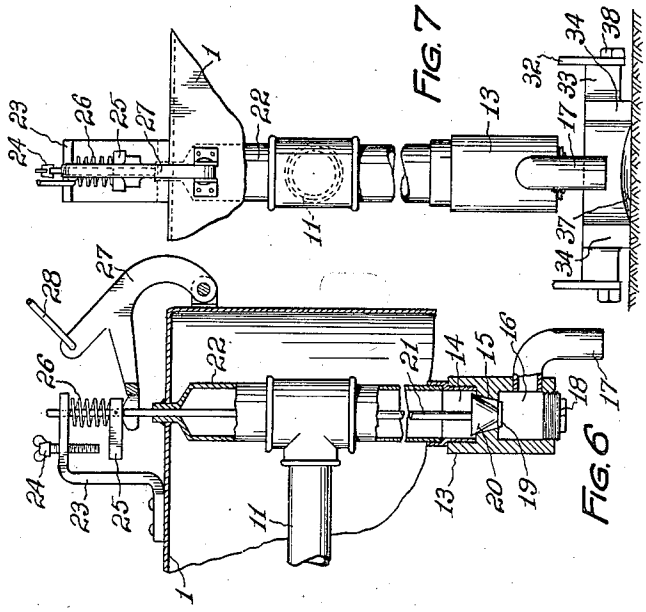

FIG. 7

FIG. 6

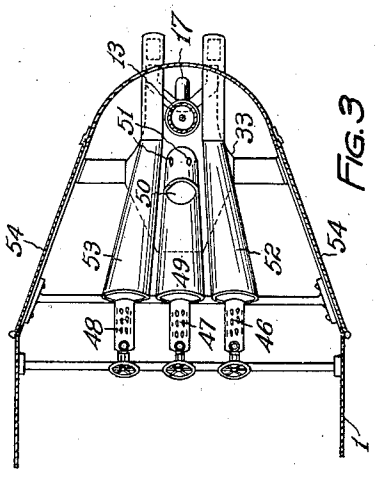

FIG. 3

INVENTOR:
William Blankner
BY
Haugwood and Van Horn
HIS ATTORNEYS.

May 13, 1947. W. BLANKNER 2,420,410

PAVEMENT REPAIRING AND THE LIKE

Filed Aug. 2, 1940 2 Sheets-Sheet 2

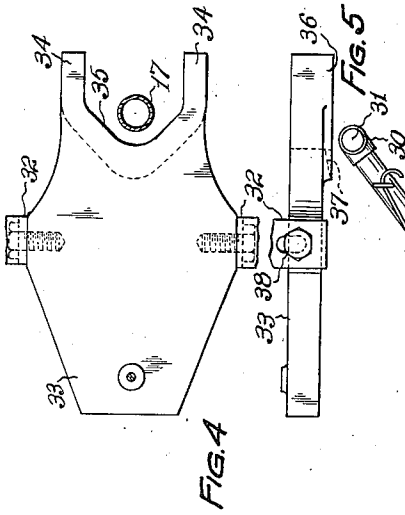

FIG. 4

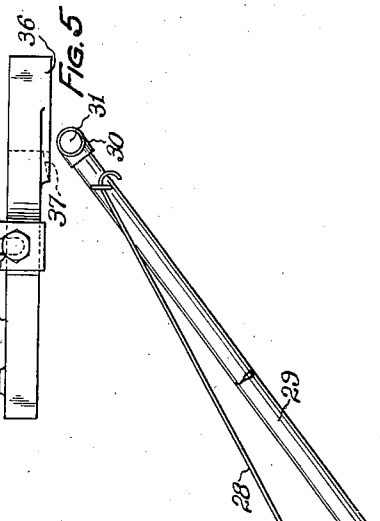

FIG. 5

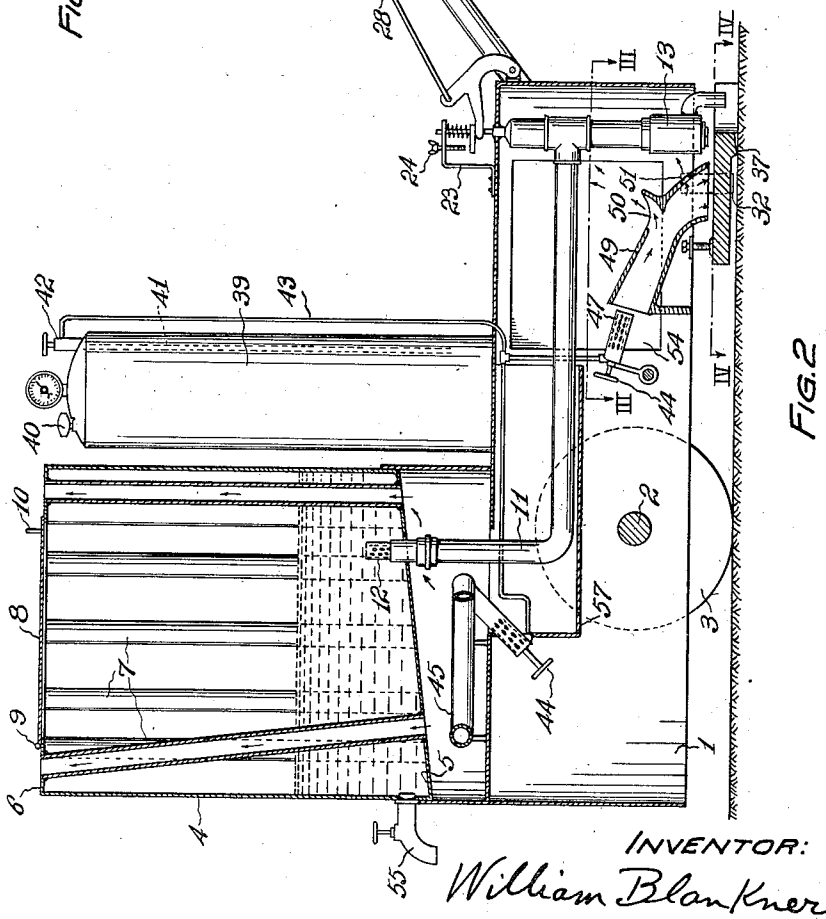

FIG. 2

INVENTOR:
William Blankner

BY
Haworth and Van Horn
HIS ATTORNEYS.

Patented May 13, 1947

2,420,410

UNITED STATES PATENT OFFICE

2,420,410

PAVEMENT REPAIRING AND THE LIKE

William Blankner, Lakewood, Ohio

Application August 2, 1940, Serial No. 350,042

6 Claims. (Cl. 94—39)

1

This invention relates to an apparatus or method of applying thermo-plastic or meltable materials, and is particularly useful in the application of asphalts and like materials which become fluid when subjected to heat and which may be used for mending and sealing similar or other kinds of materials.

An object of my invention is to provide an improved apparatus which will supply material effectively to a surface or space which it is desired to coat or fill.

Another object of the invention is to provide an improved apparatus for delivering material which will prepare the surface to which the material is supplied for forming a firm bond therewith.

Another object of the invention is to provide an improved apparatus which will effectively distribute the material supplied.

Another object of the invention is to provide an improved apparatus which will be extremely compact.

Another object of the invention is to provide an improved apparatus which may be easily handled.

Another object of the invention is to provide an improved apparatus by which the supply of material may be easily and effectively controlled.

Another object of my invention is to provide an improved apparatus which will efficiently heat the material.

Another object is to provide an improved apparatus which may be easily cleaned.

Another object is to provide an improved apparatus which will be composed of few and simple parts.

Another object is to provide an improved apparatus which will be of durable and rugged construction.

Another object is to provide an improved method of effectively filling and sealing cracks and the like.

Another object is to provide an improved method in which the sealing material will be firmly bonded to the original material.

Another object is to provide an improved method in which any excess of material is avoided.

Another object is to provide an improved method which will produce a neat and smooth surface to the material supplied.

Other objects will hereinafter appear.

The invention will be better understood from the description of one practical embodiment thereof, illustrated in the accompanying drawings, in which:

2

Figure 1 is a plan view of an apparatus embodying my invention and designed particularly for sealing cracks in pavements and the like;

Figure 2 is a central longitudinal sectional view, taken on the line II—II of Figure 1, some parts being broken away and others shown in elevation;

Figure 3 is a fragmentary sectional plan view of the material-applying end of the mechanism of Figures 1 and 2, taken on the line III—III of Figure 2;

Figure 4 is an enlarged plan view of the material distributing shoe and fluid discharge outlet, taken on the line IV—IV of Figure 2;

Figure 5 is a side elevational view of the shoe of Figure 4;

Figure 6 is an enlarged fragmentary sectional view of the valve mechanism controlling the supply of material; and

Figure 7 is an enlarged fragmentary, partially elevational view of the parts shown in Figure 6, taken from the front end of the apparatus.

The apparatus illustrated is especially designated for the repair of pavements which have become broken or cracked, thus producing spaces between the original paving material.

Due to the various severe conditions to which pavements are subjected, such as variations in temperature, excessive loads, and the like, these pavements, whether they be composed of brick, asphalt, macadam, or concrte, tend to develop cracks of varying size and depth.

If these cracks are only superficial, they may be relatively harmless, so far as impairing the usefulness of the pavement or its life are concerned, but the larger cracks, particularly those which penetrate through the surface of the pavement and thus permit water to pass therethrough and to undermine the pavement itself, very rapidly cause deterioration and require extensive repair and replacement.

Various types of repairs have been attempted, the commonest consisting of covering up such cracked places with patches of mastic or similar materials, and others constituting attempts to fill the cracks or seams with some kind of mastic or plastic material.

Such repairs generally introduce two difficulties:

(1) They add substantial material above the original surface of the road, causing a projection or bump; and

(2) They do not effectively seal the material at the two sides of the crack, so that they merely impede the entrance of moisture, but do not

prevent the same unless they be applied to large areas, amounting to a more or less piece-meal re-surfacing of the road.

Such re-surfacing, of course, is unsightly, and, in addition to causing the bumps above mentioned, requires considerable material and labor, and generally after a few years leads to the necessity of resurfacing the entire pavement.

By the present invention, I supply a somewhat elastic adhesive material, such as tar and asphalt, to the interior of the cracks which are formed in the pavement, and cause the same to adhere tightly to the material of the original pavement at both sides of the crack, thus effecting a very efficient seal below the original top surface of the pavement.

It is, therefore, unnecessary to have any substantial excrescence of sealing material, and the bumpiness and unsightliness of the former types of patches are eliminated, while the pavement is rendered just as impervious to moisture as it was in its original condition.

To produce an effective seal I not only melt the sealing material and deliver it in molten condition, but continue to supply heat to it as it is applied, and additionally heat the paving material at the sides of the crack, so that the molten sealing material flows into the crack in a very liquid condition and maintains this condition during the time required to fill the crack, permtting the material to adhere firmly to the sides of the filled space, this adhesion being aided by the heat which has been supplied to the paving itself.

In this manner, a much firmer bond is obtained than has ever been possible by merely pouring molten material into a crack.

When material is merely poured without the supply of additional heat, its surface tends to become chilled instantly upon contact with the pavement, so that when the sealing material has penetrated to only a slight depth it is no longer adhesive and fluid, but becomes plastic and covered with a nearly solid non-adhesive film, and so often leaves the bottom of the crack empty and available as a passage for moisture, should there be any break in the sealing material thereabove.

The apparatus illustrated, which is one by which I may easily accomplish the above indicated results, consists of a main frame 1 supported by a transverse axle 2 having at its ends wheels 3 which, for silence, may conveniently be provided with pneumatic tires.

Upon the frame is mounted a melting tank for a supply of asphalt or the like, this tank consisting of a cylindrical vertical shell 4 having a bottom 5 and a top 6. A plurality of tubes 7 extend upwardly from the bottom to the top, these being arranged in a generally annular fashion, spaced slightly inwardly from the sides of the tank. Centrally of these tubes, the top is formed with an opening through which the material may be supplied to the tank, and this opening is provided with a movable cover 8 shown as hinged at 9 and having a handle 10.

From this tank fluid sealing material may be drawn through a conduit 11 provided at its end interiorly of the tank with a strainer 12.

Adjacent the point where the material is to be delivered from the conduit is a valve shown as consisting of a casing 13 having an enlarged interior chamber 14 with which the conduit communicates.

From the bottom of the chamber is a downwardly extending conical space 15 which terminates at a threaded recess 16 to which is secured the upper end of a discharge pipe 17, the lower end of which is positioned immediately above the surface of the pavement. The bottom of the valve casing or body is closed by a threaded plug 18.

Within the chamber of the valve body, and arranged to be moved in the conical space, is a valve head which consists of a lower enlarged end 19, a still larger conical enlarged portion 20.

A stem 21 extends upwardly through the top of the valve body and an extension 22 of the conduit, the stem passing to above the top of frame 1.

The upper end of the valve stem passes through an aperture in a horizontal arm of the bracket 23 carried by the frame. Threaded into this bracket is a set screw 24 by which the maximum opening of the valve may be limited. Between the bracket and a block 25 secured to the valve stem is a compression spring 26 urging the valve toward its seated position.

A bell crank 27 is pivoted on the upper surface of the frame and arranged to raise the valve, when rocked by means of a control rod 28.

This control rod extends outwardly to adjacent the handle by which the device may be manually moved, this handle being shown as two converging pieces of pipe 29 having their ends united at a T-shaped fitting 30 in which is secured a transverse grip 31.

Pivoted beneath the frame by elongated slots in two depending lugs 32 is a shoe for spreading the material and causing it to run into the crack which is being filled, this shoe being shown in greater detail in Figures 4 and 5.

The shoe consists of a relatively flat piece of material 33 having at its forward end bifurcations 34 forming a space which converges as at 35 toward the center of the shoe. At the furcations and to the rear of this space the shoe is thickened by a downwardly projecting flange 36 formed integrally therewith.

The under side of the shoe is slightly concave as illustrated at 37, the concavity gradually tapering off to the end remote from the furcations. The shoe is supported by machine screws 38 threaded into holes in its sides which act as trunnions and may move up and down slightly in the vertically elongated holes in the lugs 32, to compensate for small irregularities in the paving surface.

It is found that the shape of the recess at the front of the shoe, and also its concave lower surface, are somewhat critical in the distribution of the material, as if the sides of the recess do not converge sufficiently, the sealing material will flow laterally, causing a wide and unsightly smear of this material upon the pavement, while if the bottom of the shoe be flat or convex, the entire shoe may be raised by some slight projection of the material, again permitting the asphalt to flow out laterally and over the surface of the pavement.

Carried immediately forward of the melting tank on the top of the frame is a fuel tank 39 in which liquid fuel, such as gasoline, oil, or the like, may be carried for supplying the heat requisite to the operation. A pump 40 is shown included in the fuel tank for maintaining sufficient air pressure upon the fuel to insure its rapid flow to the burners.

From the bottom of the tank a pipe 41 extends through its top to a valve 42 from which pipes 43 pass to the burners, these being provided with

individual valves 44 by which their operation may be controlled.

One large burner 45 is positioned under the bottom 5 of the melting tank and maintains the contents of this tank in molten condition.

The sealing material is heated until it becomes extremely fluid, preferably nearly as fluid as water, and not merely to a condition of plasticity or one of viscous fluidity. This condition of extreme fluidity is hereinafter indicated when the material is spoken of as being in "liquid" condition.

Through other valves 44 fuel may pass to three forwardly and downwardly directed burners 46, 47 and 48. The central of these burners 47 is shrouded with a sheet metal or similar cover 49, which directs the flame upon the top 33 of the shoe. An opening 50 in the top of the shroud permits a certain amount of flame and heat to pass to the space within the frame of the machine, maintaining the material delivering pipes 11 hot, so that no cooling of the material takes place as it passes along, while the lower end of the shroud has two small holes 51 directing flame forwardly against the material control valve body 13 to maintain this also in properly heated condition.

The flames from the two side jets 46 and 48 are directed downwardly by covers or shrouds 52 and 53 to meet the stream of material as it flows from the discharge pipe 17 and to impinge obliquely on the pavement itself at the sides of the crack and heat the same, the flames in practice penetrating deep into the crack and impinging on its entire side surface.

These burners or jets are of the injector type, drawing in substantial quantities of air, and being adjusted by valves 44 to produce as perfect and smokeless combustion as possible, and, as so adjusted, in practice produce a nearly invisible flame.

Doors 54 are provided through the sides of the framework 1 of the machine to permit access to the burners, valves, and the like.

The melting tank is provided with an inclined bottom having a drainage outlet 55 at its lowest point by which it may be readily emptied, the material further being caused to flow to this outlet by raising the handle so that the weight of the device is supported by the two wheels and the part of the frame remote from the handle. It will, of course, be apparent that, for ease of operation, the axle is so positioned as to be slightly behind the center of gravity of the machine, so that the operator does not have to support any substantial amount of weight in moving the machine about.

The melting tank is preferably readily removable from the frame, being attached thereto by lugs and bolts, and the supply line, to assist in this ready removal, is provided with a coupling 56 which may be disconnected through one of the doors through the frame.

It will be noted that all the heat rising from burners 46, 47 and 48 is trapped within the hollow space defined by a rectangular baffle or cover 57 and so is confined about conduit 11 and must escape through the flue tubes 7.

Thus the heat produced is efficiently utilized in maintaining the sealing material in proper melted condition.

While I have described the illustrated embodiment of my invention in some particularity, obviously many others will readily occur to those skilled in the art to which this appertains, and I

therefore do not limit myself to the precise details shown and described herein, but claim as my invention all embodiments, modifications and variations coming within the scope of the appended claims.

I claim:

1. The method of sealing cracks in paving or the like, which comprises melting to a liquid condition sealing material which is solid at ordinary atmospheric temperatures, conducting said liquid molten material to a crack to be filled, supplying additional heat to the molten material as it is conducted to the crack, directing heat into the crack and heating the paving at the sides thereof below the plane of the top surface of the paving to a temperature above that at which the molten material will congeal before admitting the molten material to the crack, and then pouring the liquid sealing material into the crack and permitting the paving and sealing material to cool.

2. The method of sealing cracks in paving or the like, which comprises melting to a liquid condition sealing material which is solid at ordinary atmospheric temperatures, conducting said liquid molten material to a crack to be filled, supplying additional heat to the molten material as it is conducted to the crack, directing heat into the crack and heating the paving at the sides thereof below the plane of the top surface of the paving to a temperature above that at which the molten material will congeal before admitting the molten material to the crack, then pouring the liquid sealing material into the crack, leveling the upper surface of the liquid sealing material substantially to the plane of the top surface of the paving, and permitting the paving and sealing material to cool.

3. The method of sealing cracks in paving or the like, which comprises melting to a liquid condition sealing material which is solid at ordinary atmospheric temperatures, conducting said liquid molten material to a crack to be filled, supplying additional heat to the molten material as it is conducted to the crack, directing heat into the crack and heating the paving at the sides thereof below the plane of the top surface of the paving to a temperature above that at which the molten material will congeal before admitting the molten material to the crack, then pouring the liquid sealing material into the crack, scraping level the upper surface of the liquid sealing material substantially into the plane of the top of the paving, during such scraping supplying additional heat to the material to maintain it in liquid condition, and then permitting the pavement and sealing material to cool.

4. A crack sealing device comprising a reservoir for crack sealing material, a reservoir for fuel, a burner associated with said first mentioned reservoir and connected to said second mentioned reservoir to receive fuel therefrom, a conduit leading from the first mentioned reservoir and having an outlet adapted to be brought adjacent to a crack to be sealed, a second burner adjacent said conduit and connected to the second mentioned reservoir, a shoe having a bifurcated end within the furcations of which the outlet is positioned, the furcations being substantially parallel to each other and to the surface of the pavement, the second mentioned burner directing heated products of combustion upon the upper surface of the shoe.

5. A crack sealing device comprising a reservoir for crack sealing material, a reservoir for fuel,

a burner associated with said first mentioned reservoir and connected to said second mentioned reservoir to receive fuel therefrom, a conduit leading from the first mentioned reservoir and having an outlet adapted to be brought adjacent to a crack to be sealed, a second burner adjacent said conduit and connected to the second mentioned reservoir, a shoe having a bifurcated end within the furcations of which the outlet is positioned, the second mentioned burner directing heated products of combustion upon the upper surface of the shoe, the shoe having depending flanges converging in alignment with said outlet and extending along said furcations and having a concave lower surface.

6. A crack sealing device comprising a reservoir for crack sealing material, a reservoir for fuel, a burner associated with said first mentioned reservoir and connected to said second mentioned reservoir to receive fuel therefrom, a conduit leading from the first mentioned reservoir and having an outlet adapted to be brought adjacent to a crack to be sealed, a second burner

adjacent said conduit and connected to the second mentioned reservoir, a shoe having a bifurcated end within the furcations of which the outlet is positioned, the second mentioned burner directing heated products of combustion upon the upper surface of the shoe, connections permitting vertical motion of the shoe relative the outlet of the conduit and preventing relative horizontal motion of these parts.

WILLIAM BLANKNER.

REFERENCES CITED

The following references are of record in the file of this patent:

UNITED STATES PATENTS

Number	Name	Date
1,924,636	Burket	Aug. 29, 1933
2,161,488	Stewart	June 6, 1939
1,750,104	Heltzel	Mar. 11, 1930
1,698,015	Fitzgerald	Jan. 8, 1929
1,733,841	Vincent	Oct. 29 ,1929