Aug. 19, 1924.

1,505,756

E. C. L. WAGNER

BATHING POOL

Filed June 3, 1924

Fig. 1.

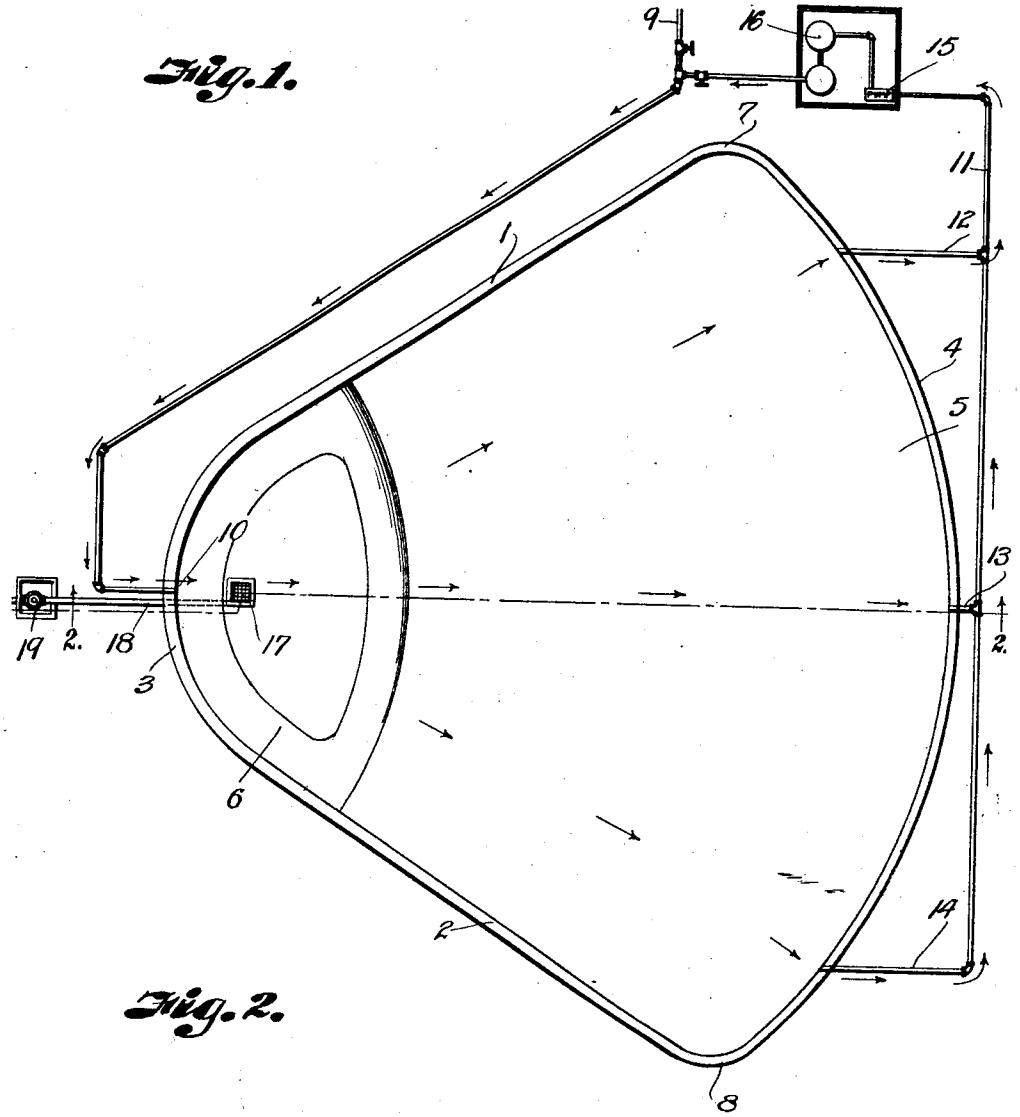

Fig. 2.

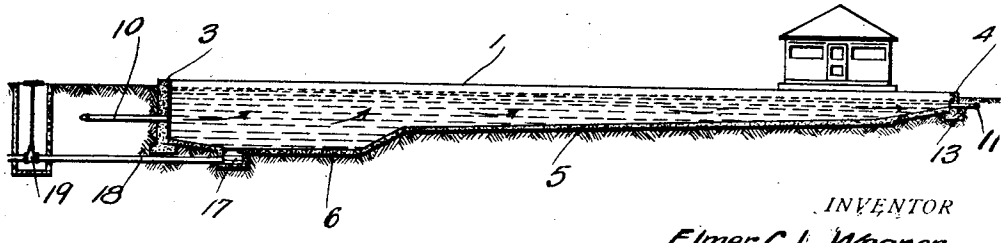

INVENTOR

BY Elmer C. L. Wagner

ATTORNEY

Patented Aug. 19, 1924. 1,505,756

UNITED STATES PATENT OFFICE.

ELMER C. L. WAGNER, OF KANSAS CITY, MISSOURI.

BATHING POOL.

Application filed June 3, 1924. Serial No. 717,471.

To all whom it may concern:

Be it known that I, ELMER C. L. WAGNER, a citizen of the United States, residing at Kansas City, in the county of Jackson and State of Missouri, have invented certain new and useful Improvements in Bathing Pools; and I do declare the following to be a full, clear, and exact description of the invention, such as will enable others skilled in the art to which it appertains to make and use the same, reference being had to the accompanying drawings, and to the figures of reference marked thereon, which form a part of this specification.

This invention relates to bathing pools, usually termed swimming pools and the primary object thereof is to provide a highly sanitary pool and one where the greatest efficiency may be obtained in a given area. Ordinary swimming or bathing pools are constructed rectangular in form, either square or elongated and the bottoms are usually inclined from one end to the other, the greatest depth being at the end provided for divers, the pool becoming more shallow toward the opposite end but the angle of the floor of the pool is such that a relatively small portion of the pool is available for non-swimmers. As a matter of fact about 90% of the people using the pools remain in a water having a depth of about 4½ feet or less but as the pools have heretofore been constructed, not over 70% of the pool is available for persons wishing to remaining in water of the depth of 4½ feet or less, therefore the remaining 30% of the pool is given up to about 10% of the bathers who dive. It is also important to note that these 10% remain in the water a relatively short time, whereas the 90% who occupy the remaining 70% of the pool are continuously in the water the result being that 70% of the pool is polluted by 90% of the bathers and 30% of the pool would have practically fresh water were it not for the fact that pools now constructed have their inlet and outlet so arranged that the polluted water flows through the purer water, that is fresh water is ordinarily admitted at the shallow end of the pool and discharged at the deeper end of the pool therefore forcing the more polluted water in the pool to flow through the less poluted water. It has also been observed that the cool fresh water which enters the shallow high end of the pool tends to flow along the bottom of the pool or to at least flow in a strata below the surface to the outlet where a large portion of the water drawn from the pool will be fresh water, that is fresh water will stratify from the inlet to the outlet without carrying off the impurities of the pool. Another disadvantage of the ordinary rectangular pool is that there is a certain portion of polluted water in corners, sharp angles and recesses which does not flow but remains trapped in the corners and unless this water is moved the remaining water in the pool is endangered, due to the bacterial growth in the trapped water. We have provided a novel form of swimming pool the shape of which is conducive to easy access by life savers to persons in need of assistance. The pool is constructed substantially fan shaped with walls which diverge from the deep end of the pool toward the shallow end, the height of the walls obviously being less at the shallow part than at the deeper part, the deeper part being at the narrow portion of the tank leaving the greater area for the non-divers. The deep portion of the pool or tank is stepped down so that the floor of the shallow portion need not be arranged on such an acute angle as would be necessary if the declination of the floor was progressively uniform. By actual test we find that in arranging the wall in accordance with the illustrated embodiment of our invention to be referred to hereinafter, comparatively less material is required for a given area of the ordinary pool so we have not only provided a highly efficient pool to take care of capacity requirements but we have also provided a pool which may be inexpensively constructed.

We also contemplate the provision of means whereby fresh water is admitted to the pool at the deep end at a desirable distance above the bottom and whereby the water is removed or allowed to flow from the pool through a multiplicity of outlets at the shallow end. The purpose of this is to permit the incoming water either fresh water or water purified by filtration and sterilization, ordinarily at a lower temperature than the water in the pool to descend or remain at the bottom of the pool in the deep end. As additional water is admitted, the deep end is filled and the polluted water is forced out, not by fresh water flowing through the pool but by fresh water

displacing the polluted water. The outlets are placed at the shallow end for the additional reason that this part of the pool or tank is occupied by most of the bathers and consequently it contains the most polluted water, therefore it is obvious that it is desirable to force the polluted water from the tank or pool without permitting it to flow through the fresher water. This is an important difference between the present method of handling the water and that followed by the ordinary practice. In addition to the novel features of our invention we may make use of the ordinary scum gutter if desired but it is unimportant. By eliminating all sharp angles, corners and recesses we have eliminated the place where dead water remained and have utilized the area occupied by the corners to a more efficient advantage.

The novel construction of the preferred embodiment of our invention will be apparent by references to the following description in connection with the accompanying drawings in which—

Figure 1 is a plan view of a swimming pool constructed in accordance with our invention, and

Figure 2 is a vertical section through the same.

The pool is shown as comprising a fan shaped tank having diverging side walls 1 and 2, that is the walls diverge from the arcuate narrow connected wall 3 to the longer arcuate connecting wall 4. The bottom 5 of the fan shaped pool declines from the portion 4 towards the portion 3 until it has covered the major portion of the area of the pool then the bottom is stepped down as at 6 to provide an appreciable increase in depth in the pool. The arcuate wall 3 emerges into the side walls 1 and 2 and the portion 4 is connected to the walls 1 and 2 by curved portions 7 and 8 so that there are no sharp angles within the pool. The fresh water can be supplied by service pipes 9 which feeds water into the deep portion of the pool as at 10. The drain off or discharge pipes 11 is connected to the shallow portion of the pool by a plurality of outlet pipes 12, 13 and 14 and the pipe 11 may discharge into a pump 15 and then to a sterilizer and filter 16 which empties back into the pipe 9 to recirculate the water into the tank. It will be noted that the inlet pipe 10 is slightly above the floor of the deep portion of the tank or pool so that the incoming fresh water will fill the deep portion of the pool and displace the water in the shallow portion of the pool so as to tend to force it into the pipe 11 into the discharge branches 12, 13 and 14. Since the major portion of the tank or pool is a shallow portion it is obvious that the greater number of persons (those bathing at a depth of 4½ feet or less) may utilize a greater area of the tank than is possible in tanks of ordinary construction. For convenience in cleaning we have provided a sump 17 with a flush pipe 18 controlled by a valve 19. It will be seen from the foregoing that the pool may be economically constructed and will be efficient in that it will provide for the maximum number of normal bathers under normal conditions and yet a sufficiently large area will be provided for divers.

Attention is also called to the fact that by reason of the fan shaped pool, persons needing assistance may be rescued by life savers because they will be more accessible than the elongated rectangular pool of similar capacity.

What I claim and desire to secure by Letters-Patent is:

1. A swimming pool comprising a fan-shaped structure having its greatest depth at the narrow portion of the pool.

2. A swimming pool comprising a fan-shaped structure having its greatest depth at the narrow portion of the structure, a fresh water inlet pipe communicating with the pool at the narrow portion and discharge pipe communicating with the widest portion of the structure.

3. A swimming pool comprising a fan-shaped structure having a continuous rounded wall devoid of angle, the floor of the pool being progressively inclined from the wider portion toward the narrower portion, the floor at the narrower portion being stepped down to provide a depth for the pool considerably greater than the depth of the floor for the wider portion, a fresh water inlet in the narrower portion and a water outlet at the wider portion.

4. A swimming pool comprising a fan-shaped structure having a continuous rounded wall devoid of angle, the floor of the pool being progressively inclined from the wider portion toward the narrower portion, the floor at the narower portion being stepped down to provide a depth for the pool considerably greater than the depth of the floor for the wider portion, a plurality of water outlets in spaced relation leading from the wider portion.

In testimony whereof I affix my signature.

ELMER C. L. WAGNER.