US 20030126743A1

(19) United States

(12) Patent Application Publication

(10) Pub. No.: US 2003/0126743 A1

(43) Pub. Date: Jul. 10, 2003

Huang et al.

(54) AUTOMATIC SHAPING METHOD AND STRUCTURE OF FIN AND CONNECTION ELEMENT

(76) Inventors: **Meng-Cheng Huang**, Panchiao City (TW); **Eric Hsu**, Taoyuan Hsien (TW)

Correspondence Address:
ROSENBERG, KLEIN & LEE
3458 ELLICOTT CENTER DRIVE-SUITE 101
ELLICOTT CITY, MD 21043 (US)

(21) Appl. No.: 10/050,820

(22) Filed: Jan. 18, 2002

Publication Classification

(51) Int. Cl.[7] B21D 53/02

(52) U.S. Cl. 29/890.03

(57) ABSTRACT

The present invention provides an automatic shaping method and structure of fin and connection element. A feeder drives a material belt to enter a punch having a continuous die. The material belt passes a guide device, a bottom die, and a top die of the continuous die to perform operations of punching a central hole, shaping of outer appearance, and hole expansion and drawing. After an a period's interval, the top die is used to shear the material belt, and a pressure piece moves downwards for side shearing. At the same time of shearing, shaped sheet fins are pressured onto the connection element. A stepping device drives the pressure piece to stack the fins on the connection element one by one. The connection elements are arranged at the feeder. The connection element is sent into a positioning device one by one. After the fins are stacked, automatic replacement is performed.

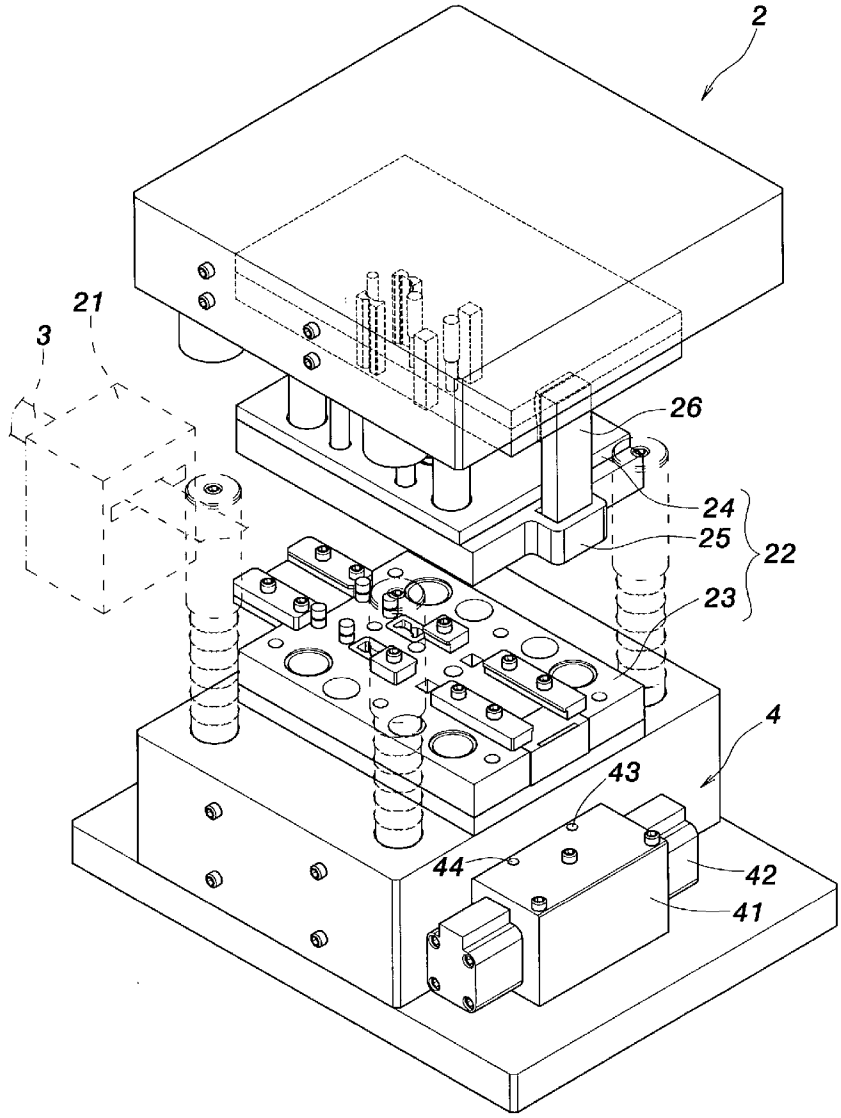

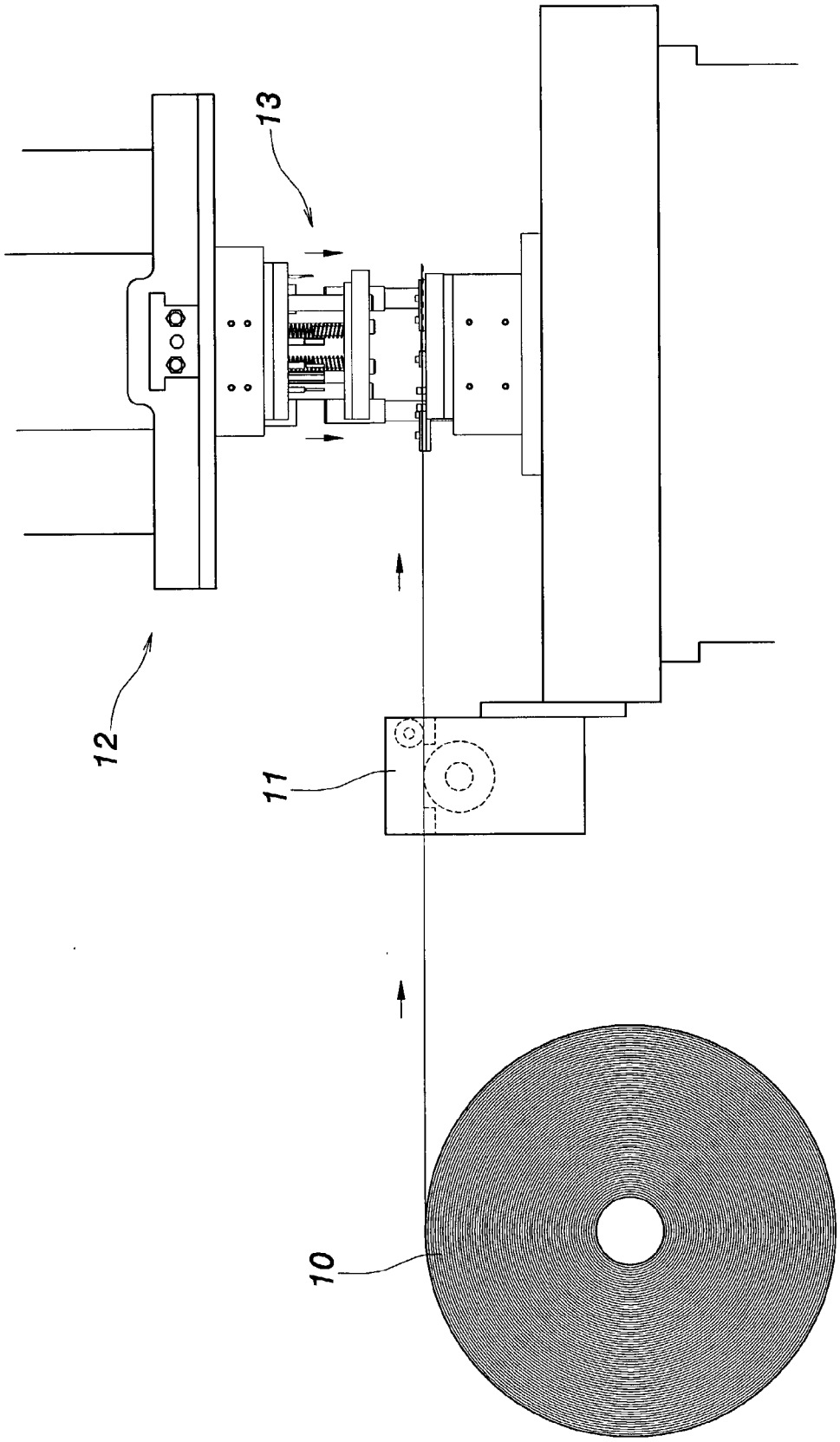

FIG. 1
PRIOR ART

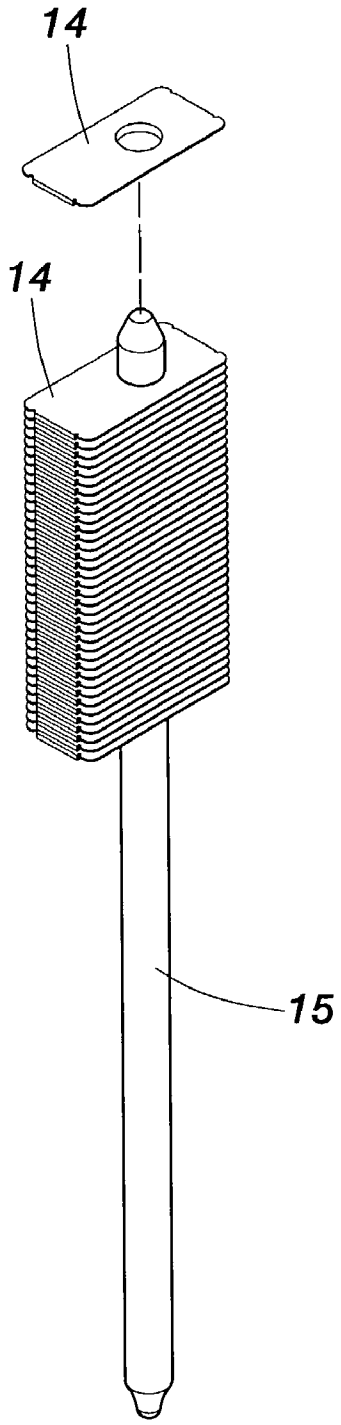

FIG. 2
PRIOR ART

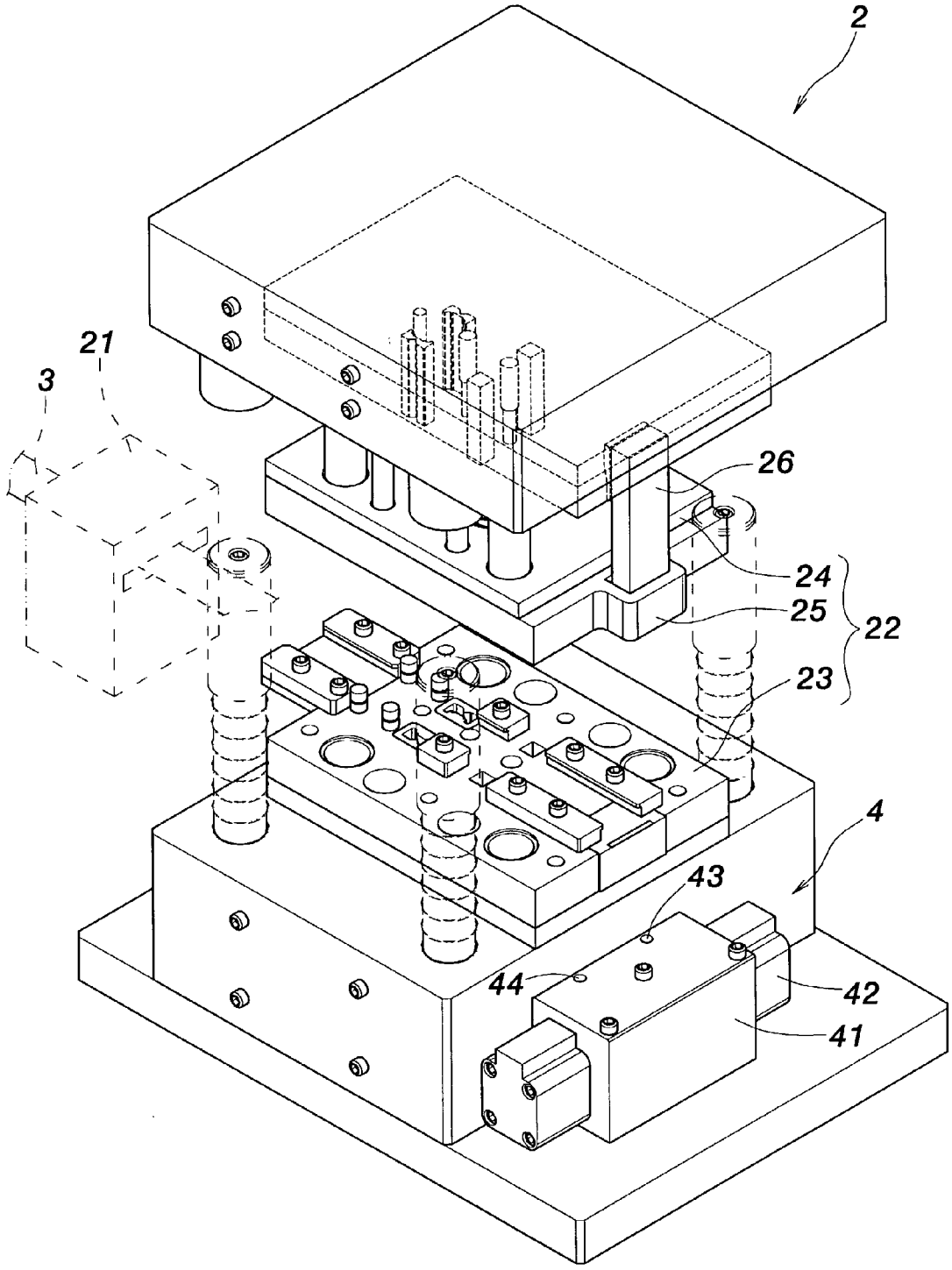

FIG.3

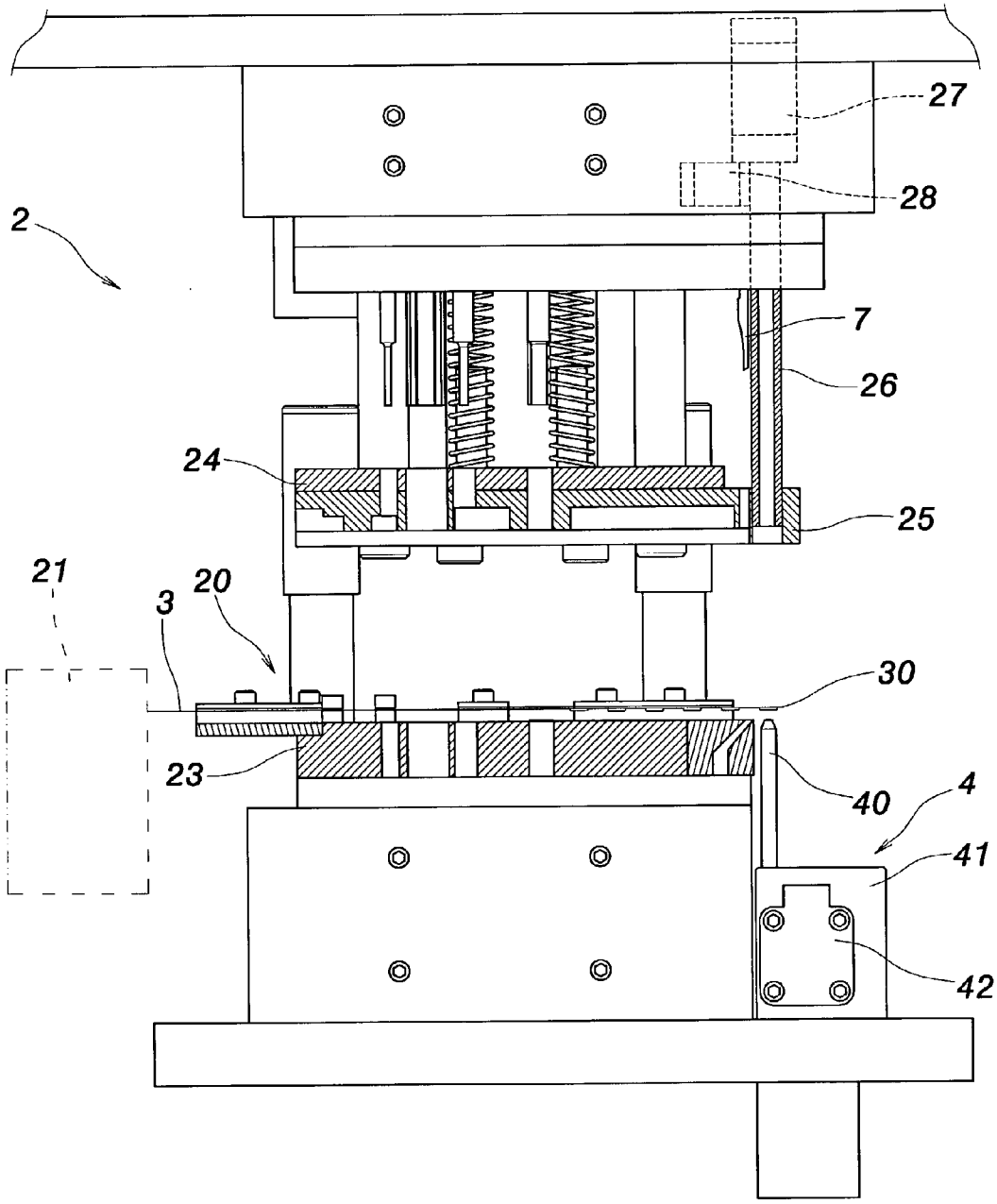

FIG. 4

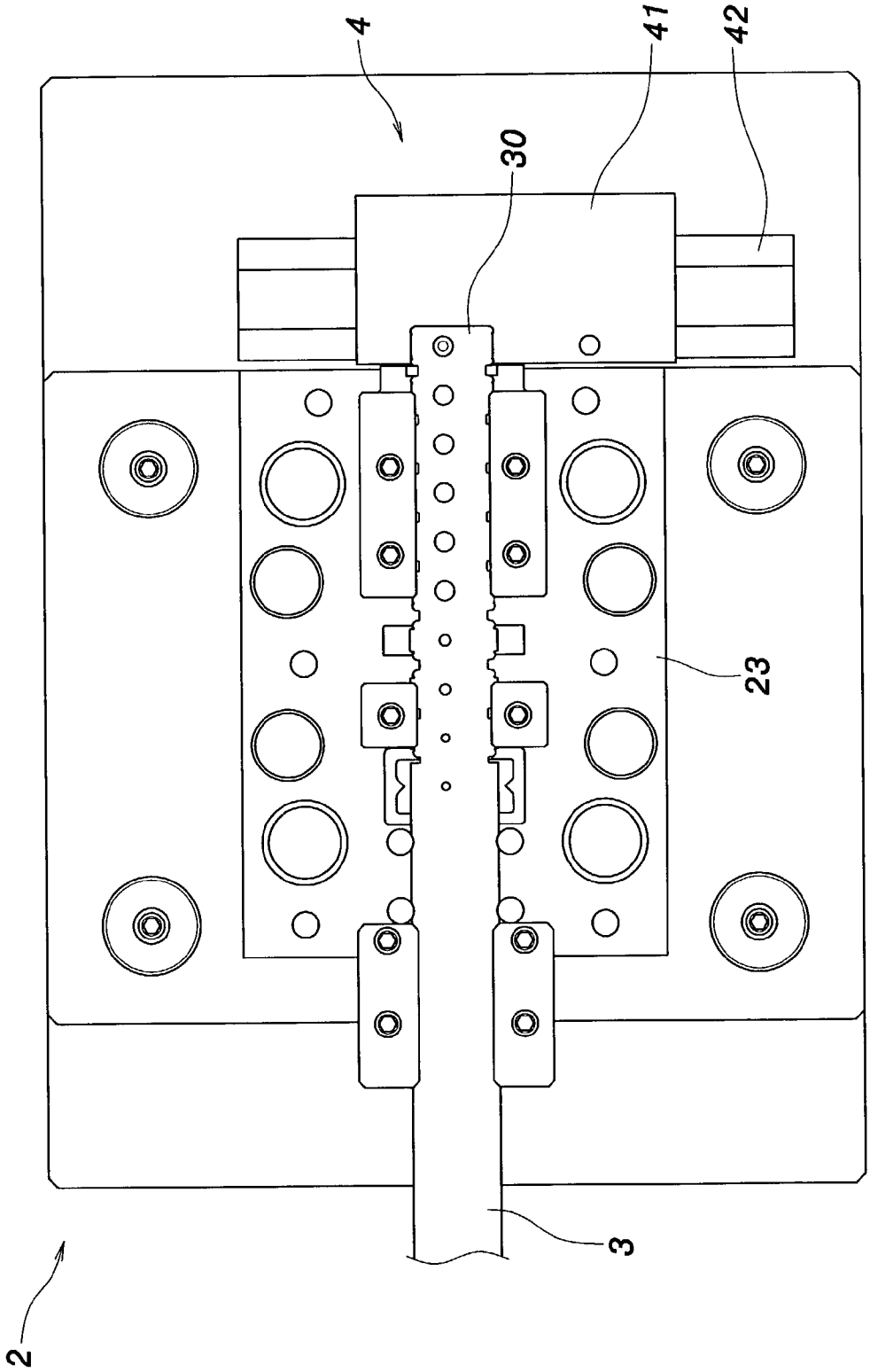

FIG. 5

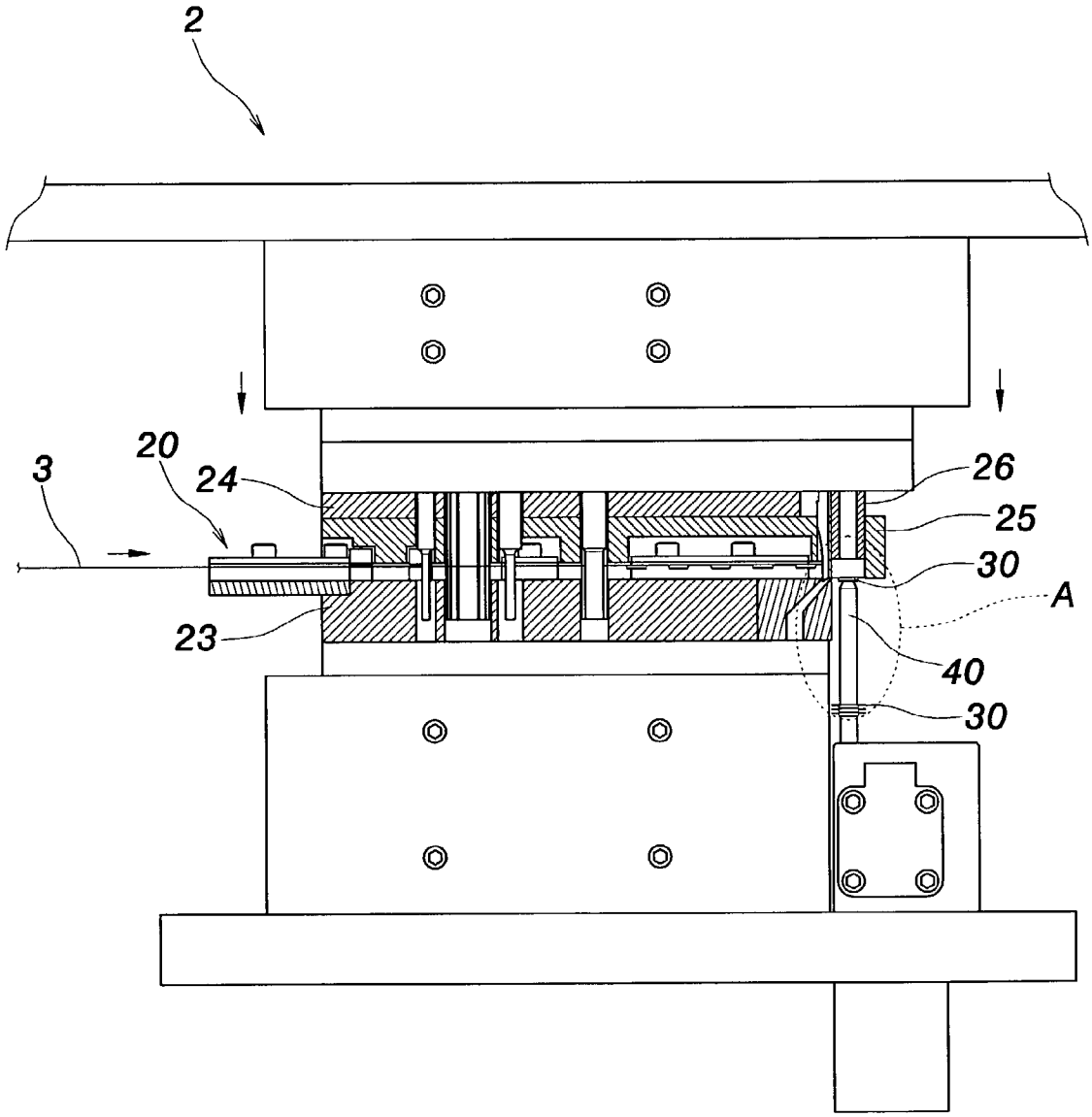

FIG. 6

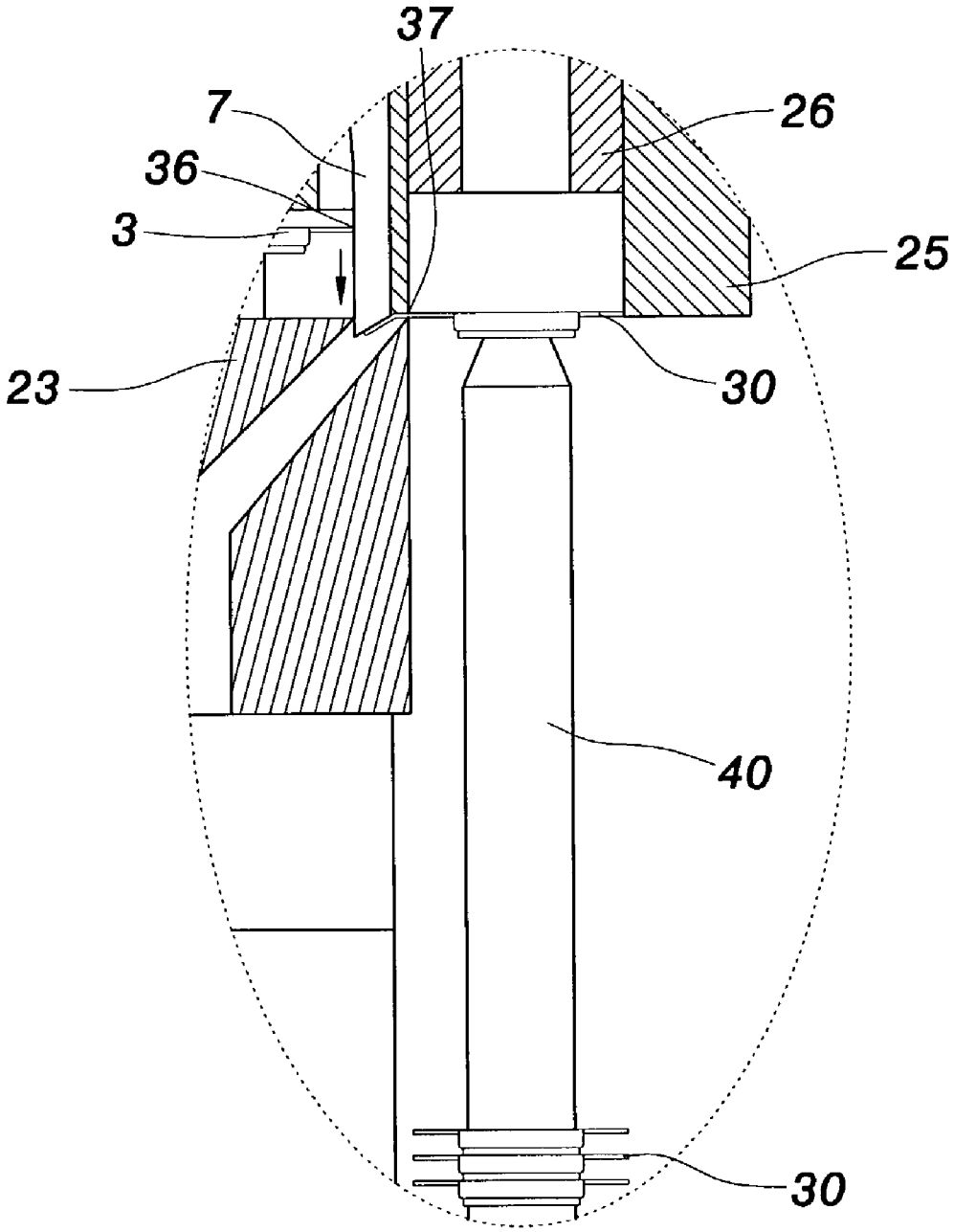

FIG. 6A

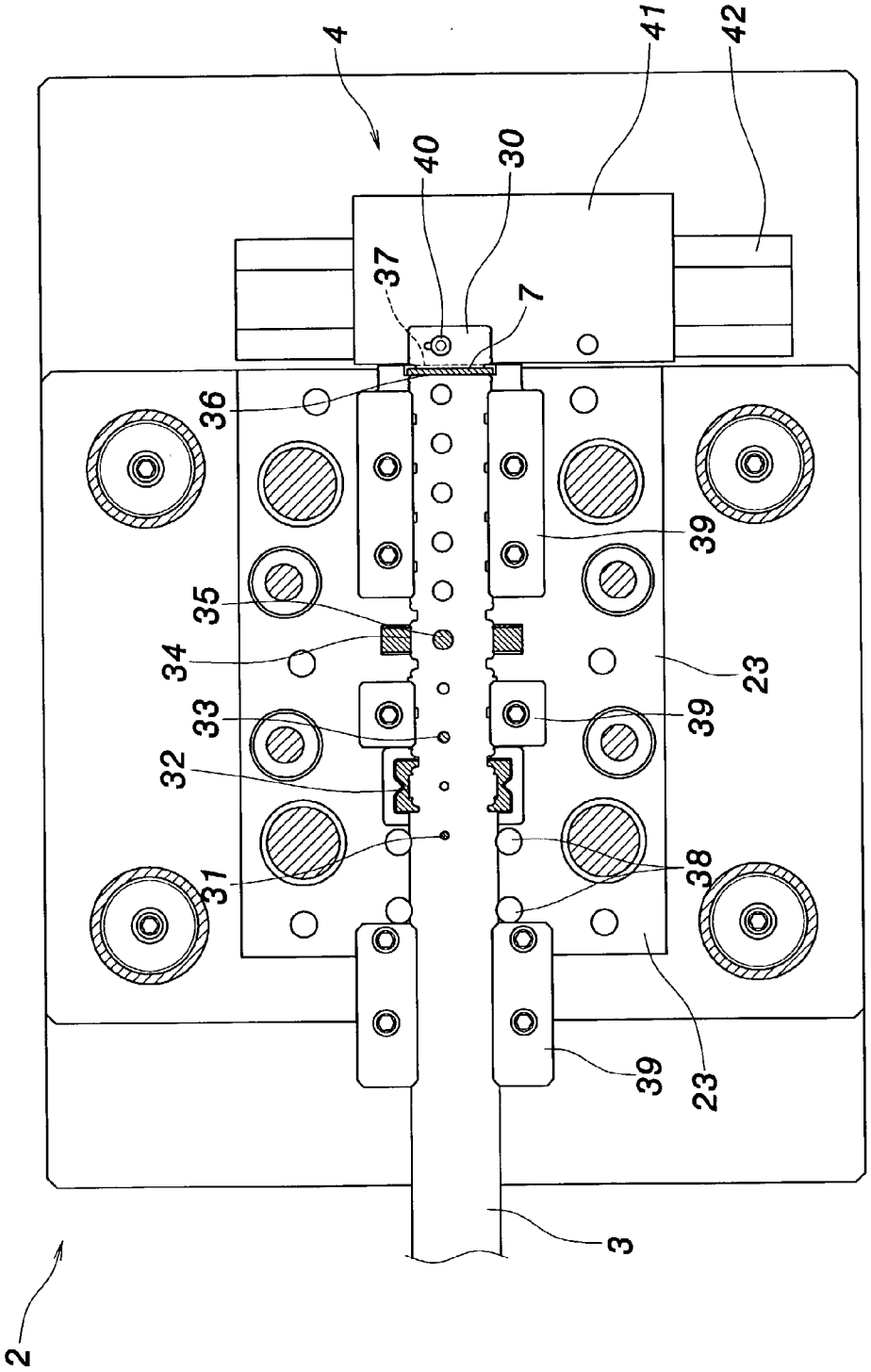

FIG. 7

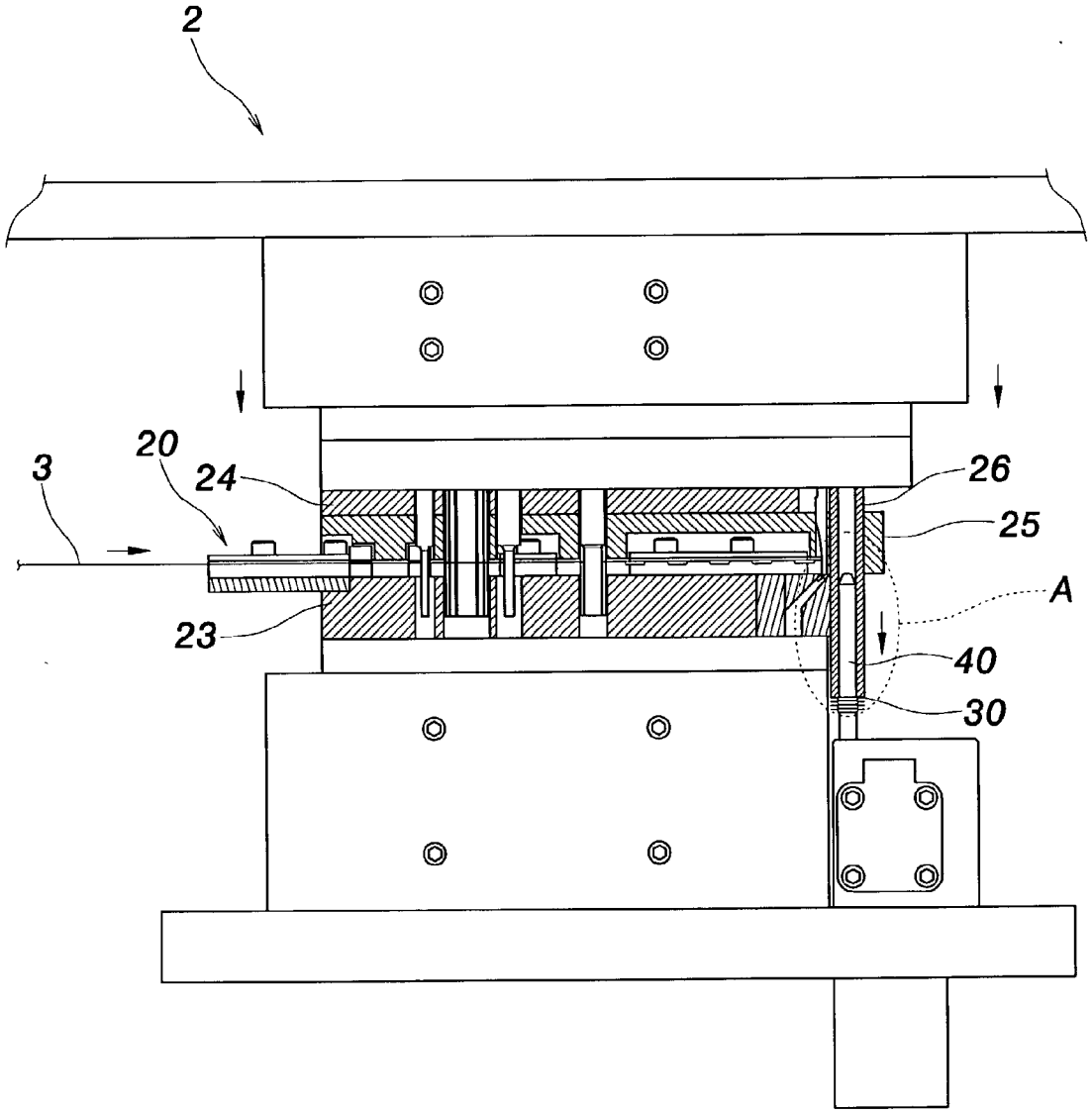

FIG.8

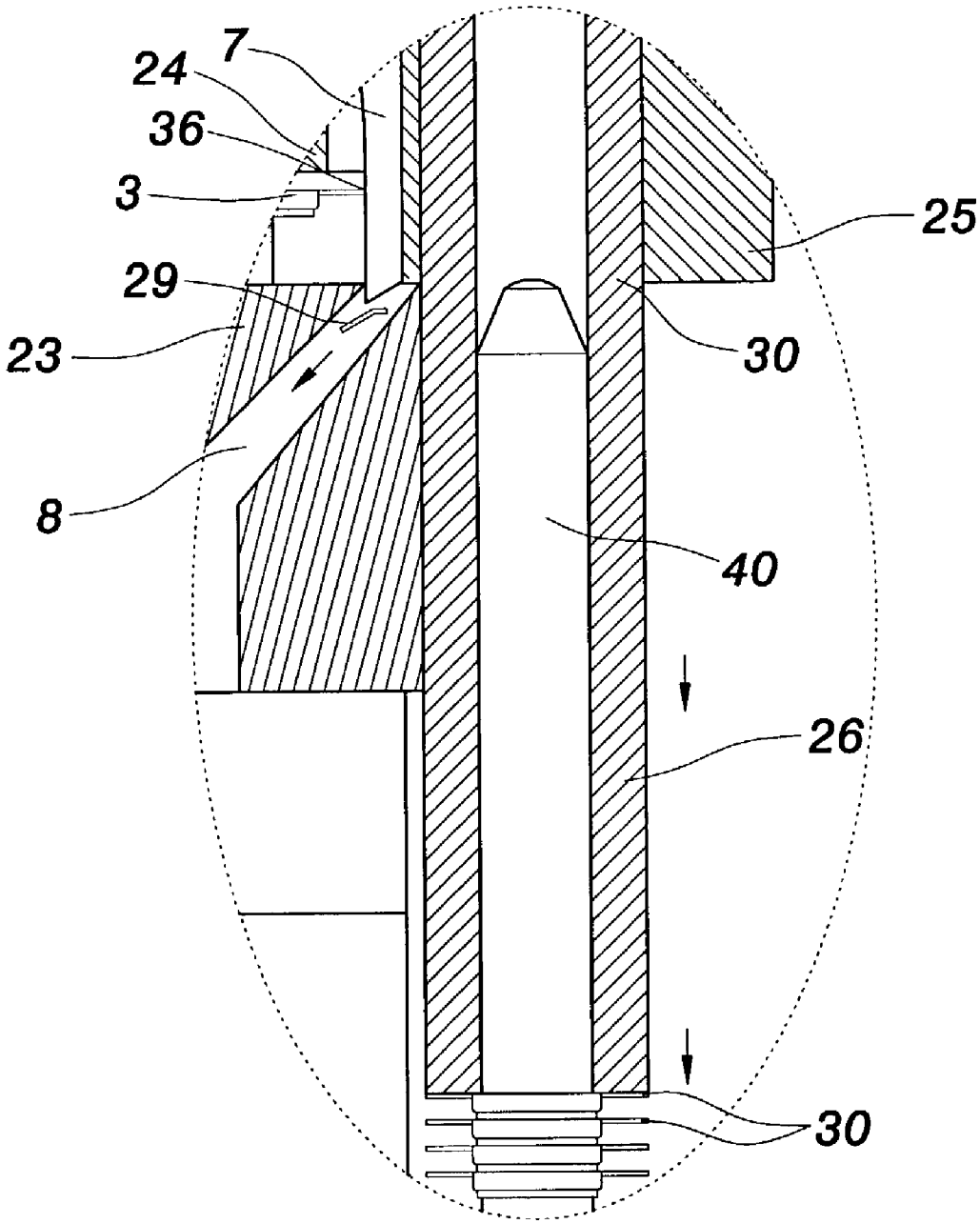

FIG. 8A

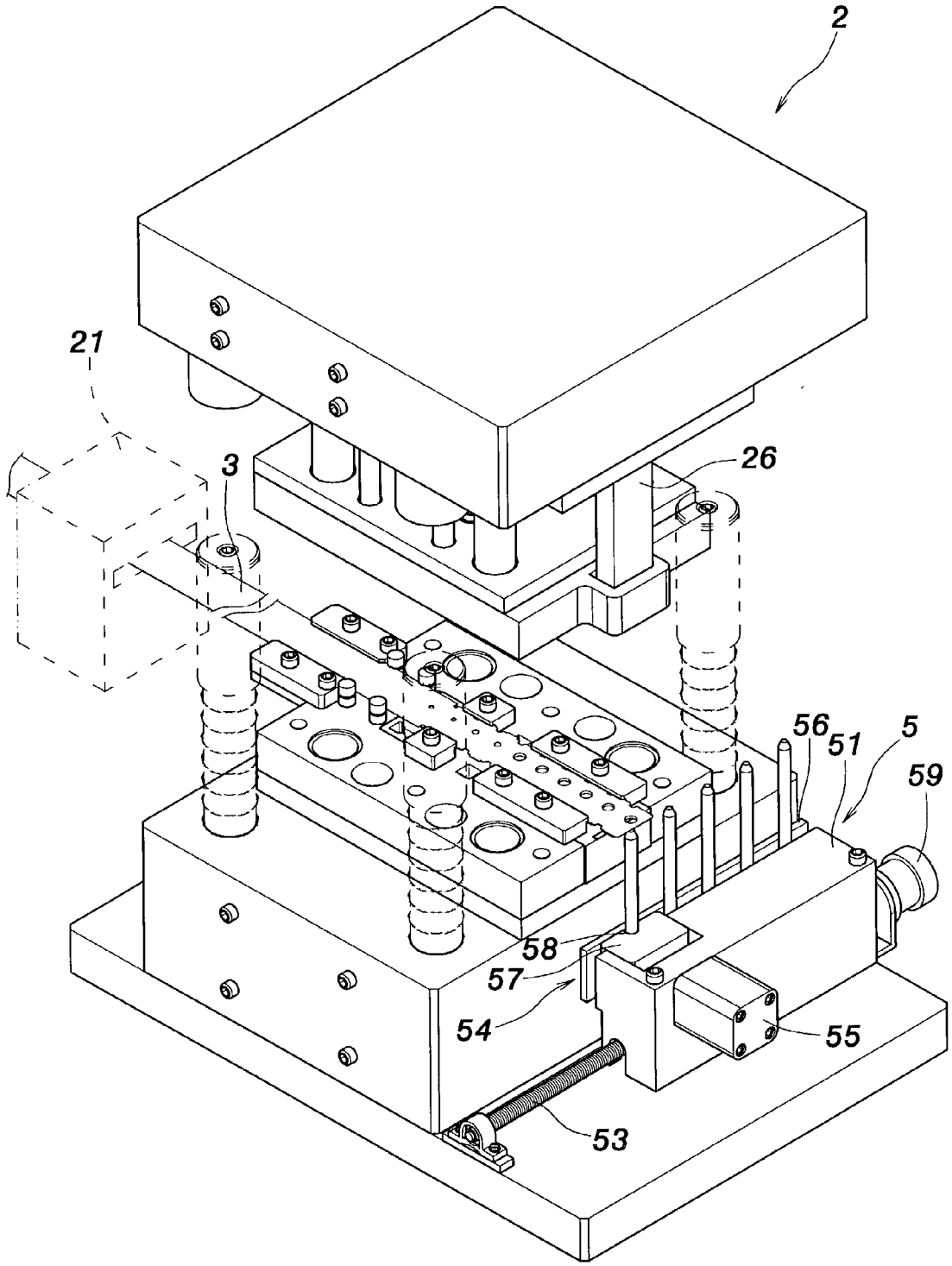

FIG.9

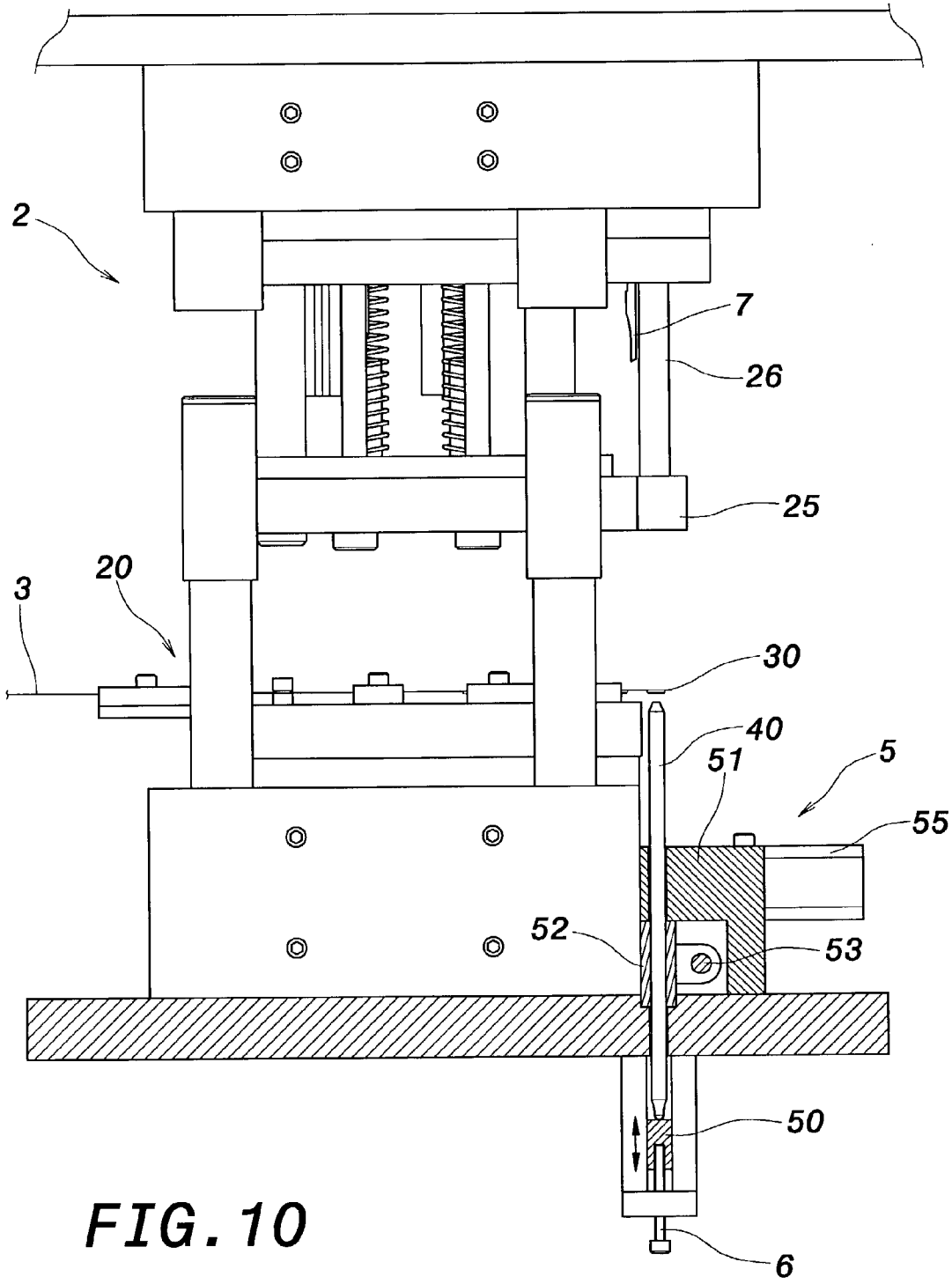

FIG. 10

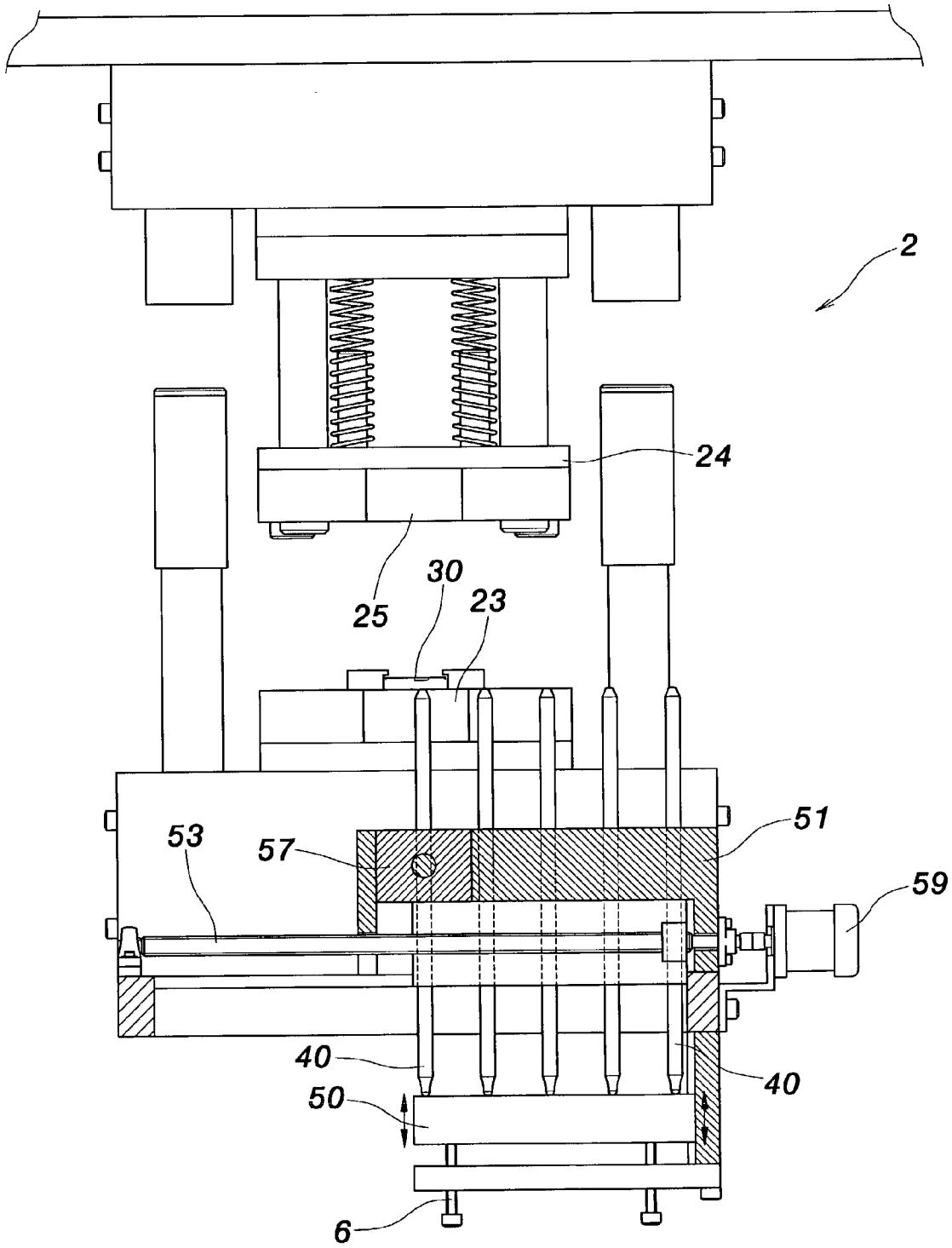

FIG. 11

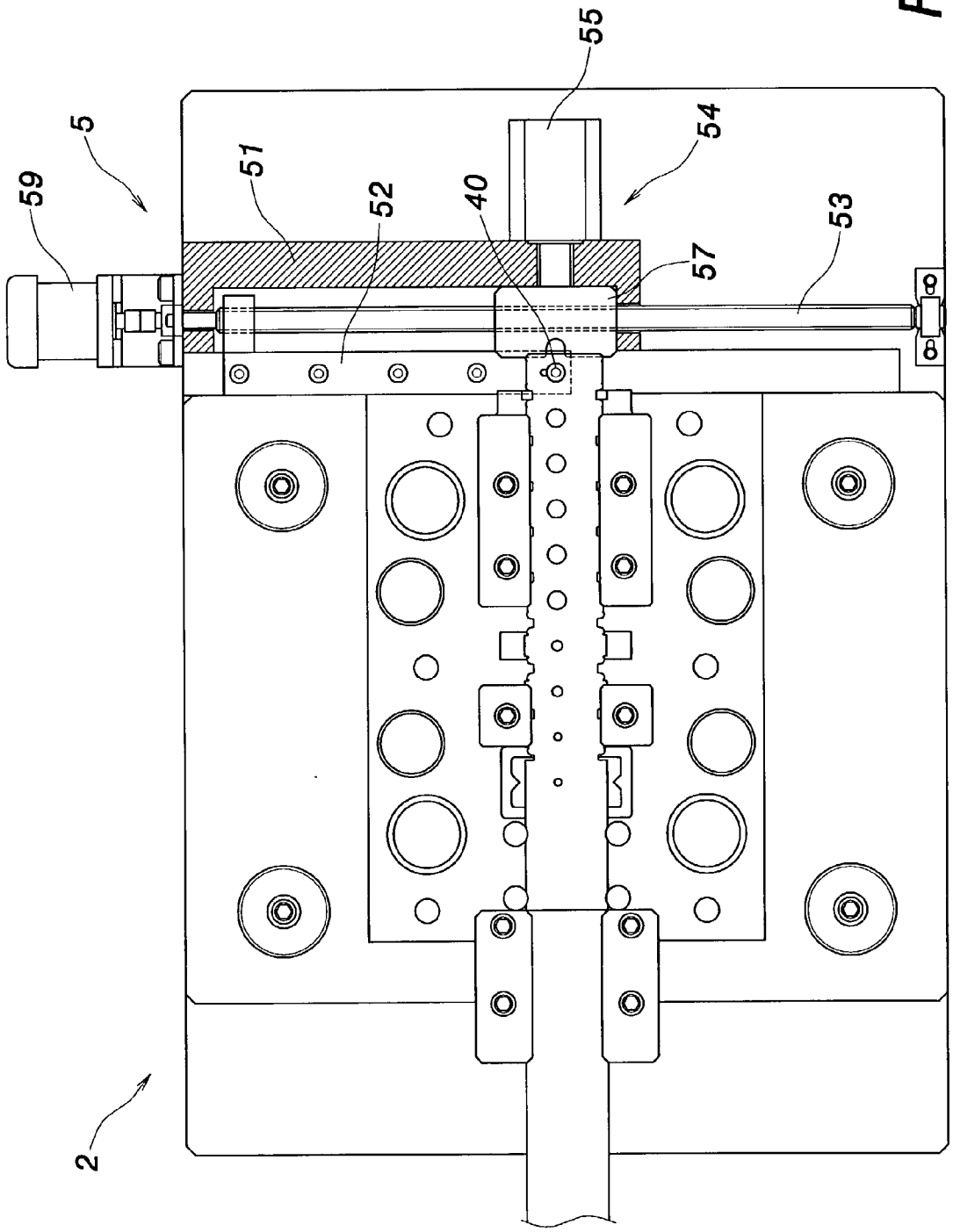

FIG. 12

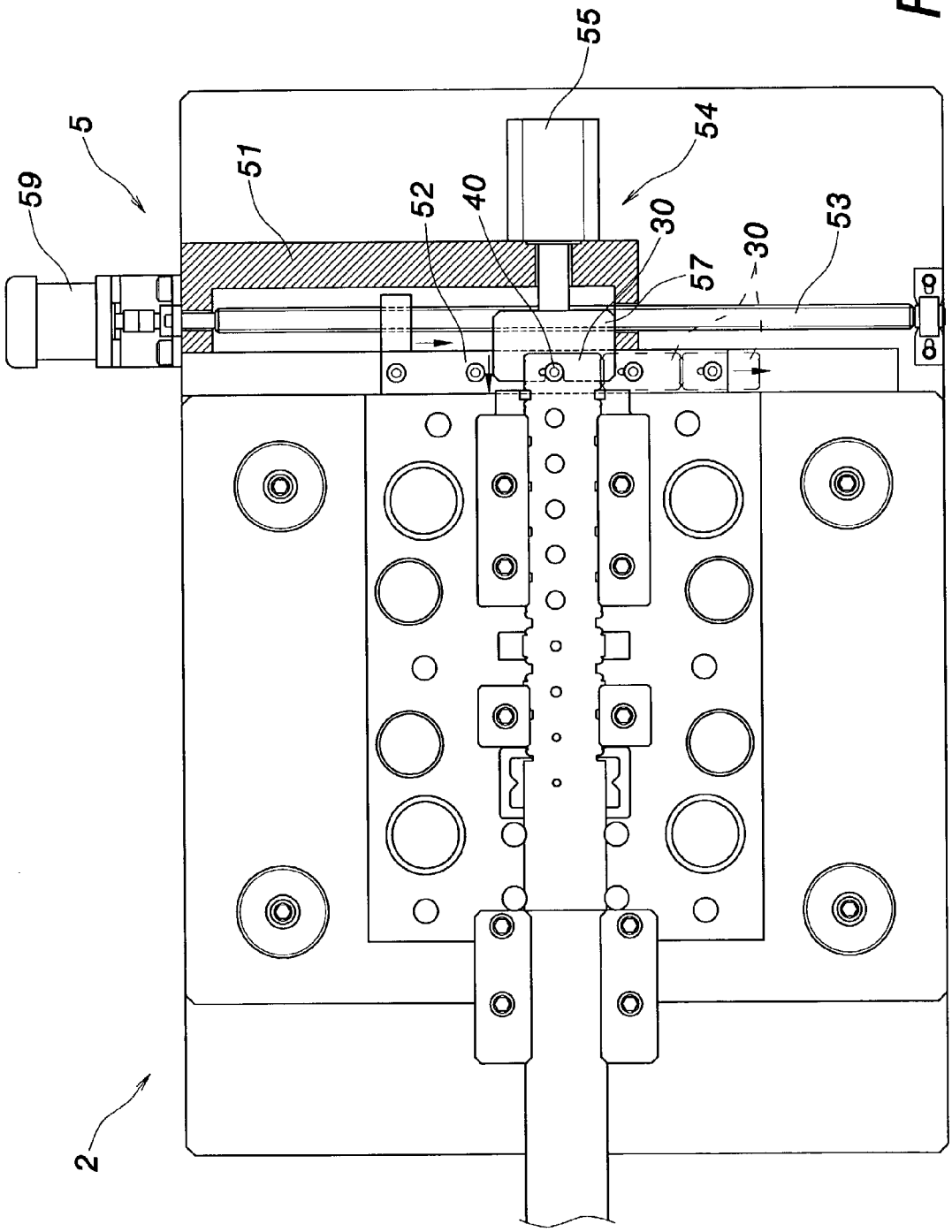

FIG. 13

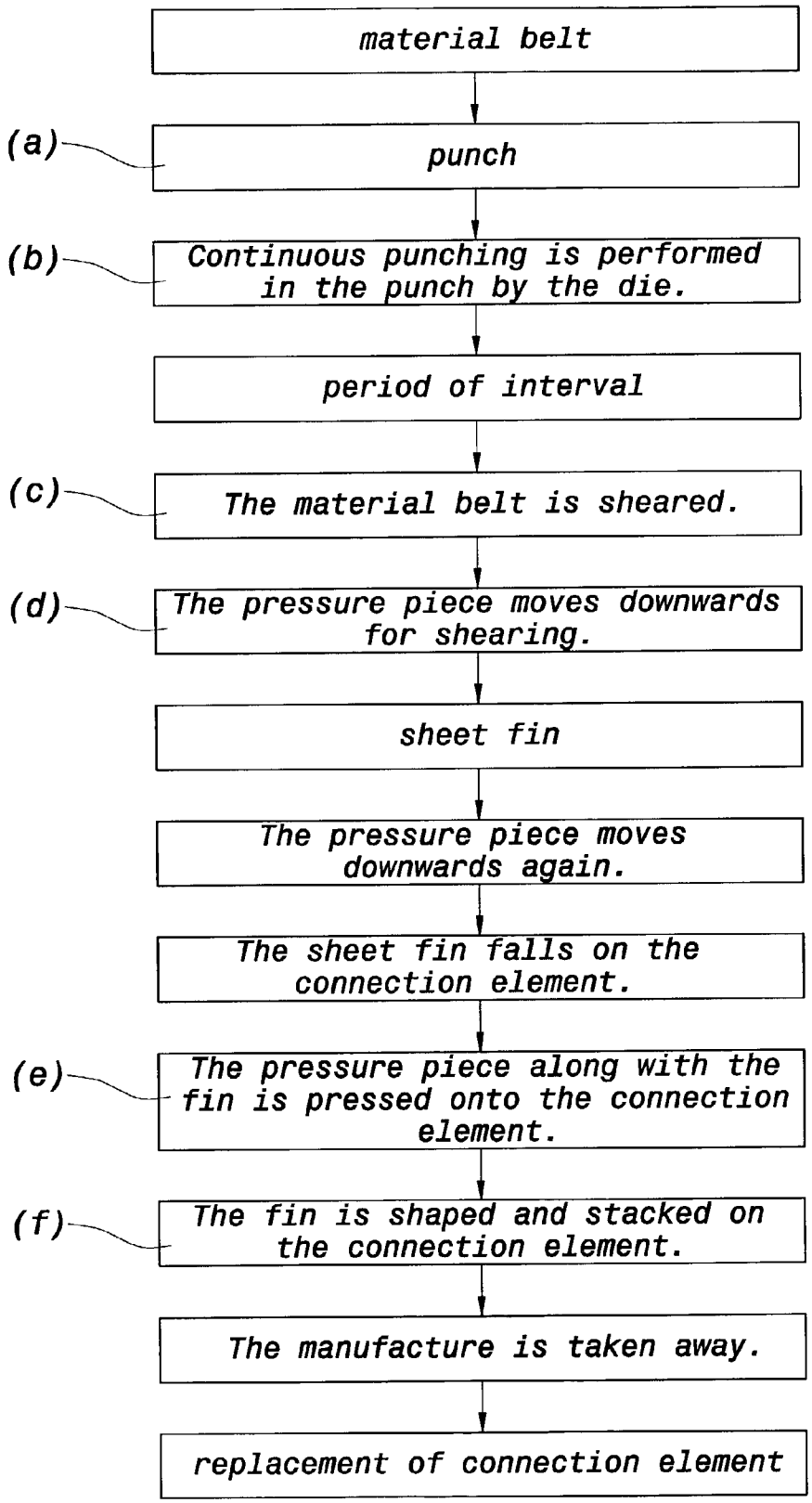
material belt
(a)
punch
(b)
Continuous punching is performed in the punch by the die.
period of interval
(c)
The material belt is sheared.
(d)
The pressure piece moves downwards for shearing.
sheet fin
The pressure piece moves downwards again.
The sheet fin falls on the connection element.
(e)
The pressure piece along with the fin is pressed onto the connection element.
(f)
The fin is shaped and stacked on the connection element.
The manufacture is taken away.
replacement of connection element

FIG. 14

AUTOMATIC SHAPING METHOD AND STRUCTURE OF FIN AND CONNECTION ELEMENT

FIELD OF THE INVENTION

[0001] The present invention relates to an automatic shaping method and structure of fin and connection element and, more particularly, to a manufacturing method and the mechanical structure thereof, wherein sheet fins shaped by punching are automatically assembled with a connection element one by one following the punching procedure.

BACKGROUND OF THE INVENTION

[0002] In addition to an integral heat radiator, a conventional heat-radiating device can be formed of a plurality of metallic sheet fins to enhance the whole heat-radiating area. It is characterized mainly in that a connection element is added on the fin structure, and a through hole is correspondingly disposed on each fin so that the connection element can pass through. The bore of the through hole must be slightly larger than the outer diameter of the connection element so that each metallic sheet fin can be positioned on the connection element.

[0003] In the conventional manufacturing method, each metallic sheet fin is shaped by one time of punching. As shown in **FIG. 1**, after a roll of material belt **10** passes through a feeder winder **11** and then enters a punch **12**, a die **13** is used to punch the material belt **10** to become sheet fins **14** shown in **FIG. 2**. Next, assembly is performed manually. Of course, there is still the manufacturing process of connection element. However, the present invention is independent of how the connection element is manufactured and thus this part will not be further described. As shown in **FIG. 2**, the fins **14** are slipped into a connection element **15** one by one.

[0004] Because the degree of joint between the fin and the connection element is high, the assembly is relatively difficult. Moreover, because each fin needs to be manually and slowly moved on the connection element and the connection element is flexible, this action is also difficult. Therefore, manufacturing by means of manual assembly is time-consuming and laborsome. Furthermore, because the cost of manual labor is expensive, and the production is low, the price of manufacture is badly affected. This is because the manufacturing and the assembly are separated, and it is necessary for each fin to undergo the action of alignment, hence detrimental to the requirement of fast manufacturing.

[0005] More specifically, in order to meet the requirement of assembly, the bore of the through hole disposed on the conventional fin needs to be slightly larger than the outer diameter of the connection element. After being assembled, not tight match arises so that each fin may be rotatable, hence causing disorderly arrangement of fins. In order to obtain a more stable structure after assembly, a fixing and positioning procedure by means of thermal soldering is further required so that satisfactory manufactures can be obtained.

SUMMARY OF THE INVENTION

[0006] The object of the present invention is to provide an automatic shaping method and structure of fin and connection element, wherein many sheet fins are made in continuous punching mode, and a through hole is formed on each fin in advance by drawing during the manufacturing process of fin. When a connection element is positioned at the position of a shaped fin, the step of assembly is also performed along with the punching operation, thereby letting sheet fins be slipped onto the connection element via the through hole. A pressure piece is further provided. Motion of the pressure piece is exploited to let the fins move along the connection element. After a certain number of the fins are stacked on the connection element one by one, the next connection element is replaced. Therefore, the action of passing the connection element through the fins needs not to be performed manually or by other special machines, and can directly match the punching process to accomplish the assembly process. Accordingly, waiting time for storage and transportation of the sheet fins is not required. In other words, the sheet fins can be immediately assembled after being manufactured, hence saving the manufacturing cost and assembly time. Moreover, the production per unit time can be increased to let the manufacture has better economy and competitive capacity on the market.

[0007] In the present invention, a material belt is driven by a feeder winder to enter a punch having a continuous die. The material belt then passes a guide device, a bottom die, and a top die of the continuous die to perform the operations of punching a central hole, shaping of outer appearance, and hole expansion and drawing. After an interval of a period, the top die is used to shear the material belt, and a pressure piece moves downwards to perform side shearing. At the same time of shearing, the shaped sheet fin is pressured onto the connection element. A stepping device drives the pressure piece to stack the sheet fins on the connection element one by one. The connection element is arranged at the feeder. The connection element is sent into a positioning device of connection element one by one. After the fins are stacked, automatic replacement is performed.

[0008] The manufacturing method of the present invention comprises the steps of:

[0009] (a) sending the material belt into the punch;

[0010] (b) performing shaping by continuous punching in the punch;

[0011] (c) initially shearing the material belt;

[0012] (d) shearing the fin side of the material belt with the pressure piece to form sheet fins;

[0013] (e) driving the pressure piece to take the sheet fins to move downwards along the connection element; and

[0014] (f) stacking the sheet fins on the connection element one by one.

[0015] The various objects and advantages of the present invention will be more readily understood from the following detailed description when read in conjunction with the appended drawing, in which:

BRIEF DESCRIPTION OF THE DRAWINGS

[0016] **FIG. 1** is a front view of manufacturing machine in the prior art;

[0017] **FIG. 2** is a partly exploded perspective view of a heat radiator;

[0018] **FIG. 3** is a perspective view of the present invention;

[0019] **FIG. 4** is a front cross-sectional view of only the die of the present invention when the die is not joined yet;

[0020] **FIG. 5** is a top view of a bottom die of the die of the present invention;

[0021] **FIG. 6** is a front cross-sectional view of only the die of the present invention when the die is already joined;

[0022] **FIG. 6A** is an enlarged view of part A shown in **FIG. 6**;

[0023] **FIG. 7** is a cross-sectional view of the die of the present invention joined above the bottom die;

[0024] **FIG. 8** is a front cross-sectional view of only the die of the present invention after the pressure piece moves;

[0025] **FIG. 8A** is an enlarged view of part A shown in **FIG. 8**;

[0026] **FIG. 9** is a perspective view of the present invention having a feeder;

[0027] **FIG. 10** is a front cross-sectional view of only the feeder portion of the present invention;

[0028] **FIG. 11** is a side view of only the feeder portion of the present invention;

[0029] **FIG. 12** is a top view of only the feeder portion of the present invention (above the bottom die);

[0030] **FIG. 13** is an action diagram of **FIG. 12**; and

[0031] **FIG. 14** is an action process of the present invention.

DETAILED DESCRIPTION OF THE PREFERRED EMBODIMENTS

[0032] As shown in FIGS. **3** to **5**, an automatic shaping structure of fin and connection element of the present invention has a punch **2**. Because the structures and action ways of various kinds of punches are almost the same, the basic structure of the punch **2** will not be described in detail in the present invention. A winder **21** is joined at one side of the punch **2**. The winder **21** is used to drive a material belt (referring to **FIG. 1**) to enter the punch **2**. The winder is used to let the material belt only move a distance slightly larger than a piece of manufacture.

[0033] A continuous die **22** is disposed in the space of the punch **2**. The die **22** is positioned in the punch **2**. The die **22** has a bottom die **23** and a top die **24**. The top die further has a shearing portion and a plurality of punching portions. Because the shapes of the shearing portion and the punching portions are the basic architectures of die, they are not manifested in the figures. Moreover, because the positions and shapes to be punched have modifiability, it is not necessary to limit the shapes and positions of disposition.

[0034] As shown in **FIG. 5, a** material belt **3** passes the guide device **20** and then advances along the bottom die **23** of the die **22**. The guide device **20** is positioning guide pieces **30** at two sides of the material belt **3**. The positioning guide pieces **30** are respectively disposed at the entry position, the exit position, and the middle position, which will not affect punching. The guide device **20** can also be a pair of ties **38**. The material belt **3** passes through the trench of the ties **38**. These devices are all limit devices for limiting the material belt **3** to move horizontally, thereby preventing the material belt **3** from springing up.

[0035] A central hole **31**, two sides **32**, an auriform hole **33**, two bent sides **34**, and a curved bent side **35** in the auriform hole **33** are disposed from the entry direction toward the exit direction on the material belt **3**. As can be seen from **FIG. 7**, totally five times of punching, one after another, are required for the above five shapes. Next, the manufacture undergoes a punching period (five intervals of space) and is then pushed out of the die **22**.

[0036] The present invention is mainly characterized in that an outer frame **25** beside the top die **24** of the die **22** joins a pressure piece **26**, as shown in **FIG. 4**. The upper end of the pressure piece **26** joins a push device **27** and a stepping control device **28**. The pressure piece **26** forms shearing interfaces near the sides of the die **22** and the periphery of the bottom die **23**. A shearing tool **7** is disposed between the top die **24** and the bottom die **23** of the die **22**, as shown in **FIGS. 6 and 10**. A far edge line **36** of the material belt **3** is sheared, and the positioned pressurized to break by the pressure piece **26** is a near edge line **37**. A plate **29** between the far edge line **36** and the near edge line **37** is punched off. The plate **29** is removed via a slide-off passageway **8** of the bottom die **26**. At the same time of punching off, semi-manufactures **30** of sheet fins become free bodies, and can match the connection element along with the pressure piece. The material belt shown in **FIG. 5** undergoes the punching of **FIG. 6** to show the state of **FIG. 7**, and is then punched by the pressure piece **26** of **FIG. 8**. The punching-off state of the plate **26** can be seen with comparison of **FIG. 8**A and **FIG. 6A**. The steps of (a) to (d) are described above.

[0037] A positioning device **4** of connection element is joined in the punch **2**, and is outside the distal end of the bottom die of the die. A connection element **40** is positioned at the positioning device **4**, which is exactly below the pressure piece **26**. The connection element **40** can be a bar, a pipe, or a thermal tube. The pressure piece **26** takes the punched semi-manufacture of sheet fins **30** to be stacked on the connection element **40** one by one. The positioning device **4** of connection element shown in FIGS. **3** to **8** has at least a pair of holes **43** and **44**, which are directly disposed on a slide piece **41** of the punch **2**. The slide piece **41** reciprocates on a slide track **42**. The action of extracting the connection element **40** from either the hole **43** or **44** is performed manually or by machine.

[0038] The positioning device **4** of connection element is matched with the action of the push device **37** of the pressure piece **26** to let the pressure piece **26** perform the action of moving downwards. The push device **27** is usually a hydraulic cylinder to generate reciprocating actions. Because the semi-manufactures **30** are stacked on the outer surface of the connection element **40**, the stroke each time needs to diminish gradually. Therefore, the stepping control device **30** is matched. The stepping control device **30** is a small stepper motor to lead the pressure piece **36** to make a recession stroke each time. After the number of semi-manufactures to be stacked is arrived, the pressure piece **26** restores to its

original position. The above describes the most important steps of (e) to (f) of the present invention, whereby the semi-manufactures **30** are pushed and positioned by the pressure piece **26** one by one. The pressure piece **26** can be a tube body shown in **FIG. 4**.

[**0039**] As shown in FIGS. **9** to **13**, a feeder **5** is further provided to match the positioning device **4** of connection element, thereby generating positioning and clamping functions of the connection element **40**. In other words, a row of connection elements are arranged at the feeder **5**, and are sent in by the feeder one by one for assembly processing. The feeder **5** has a slide piece **51**. A container **52** for receiving a row of connection elements is joined on the slide piece **51**. The slide piece **51** is connected with a stepping push rod **53**, which can be a screw rod. The slide pieces **51** at two sides above the container **52** are abutting walls of connection elements. A clamping positioner **54** is disposed at one side of the abutting walls. The clamping positioner **54** is driven by a hydraulic cylinder **55**. In other words, the slide piece **51** has a fixing piece **56** and a slide piece **57** thereon. A positioning guide trench **58** is disposed between the two pieces **56** and **57** to receive a connection element **40**. The hydraulic cylinder **55** is used to lead the slide piece **57** so that the assembled manufacture can leave from the punch to a conveyance device. The stepping push rod **53** of the feeder **5** is driven by a stepper motor **59**. The feeder **5** has an adjustment baffle **50** thereon. The top end of the adjustment baffle **50** contacts the lower end of the connection element **40**. A height adjustment screw **6** (shown in **FIG. 10**, being a height adjustment structure) is joined at the lower end of the adjustment baffle **50** on the feeder **5**. The adjustment of the adjustment baffle **5** shown in **FIG. 11** is used to control the stacked number of the semi-manufactures **30**. The motion of the feeder **5** is shown in FIGS. **12** to **13** to generate automated production mode.

[**0040**] Referring to **FIG. 14**, the manufacturing method of the present invention comprises the steps of:

[**0041**] (a) sending the material belt **3** into the punch **2**;

[**0042**] (b) performing continuous punching in the punch **2** spaced by an interval of period of shaping by continuous punching;

[**0043**] (c) initially shearing the material belt;

[**0044**] (d) shearing the fin side of the material belt with the pressure piece **26** to form sheet fins;

[**0045**] (e) driving the pressure piece to take the sheet fins to move downwards along the connection element (i.e., using the pressure piece to pressurize the fins onto the connection element); and

[**0046**] (f) stacking the sheet fins on the connection element one by one.

[**0047**] Subsequently, the manufacture is taken away, and replacement and positioning of the connection element are performed. The height of the position of the connection element can be adjusted to set the number of stacked fins. The pressure piece is driven in stepping way to recede a small distance each time. The shaping by continuous punching means performing the operations of punching a central hole, shaping of outer appearance, and hole expansion and drawing on the material belt between the top die **24** and the bottom die **23**. After the outer appearance is formed, an action of punching and bending the edge is also included. The bent edge can be used as a separation portion between two sheet fins. More specially, the drawing of hole is exploited to facilitate the whole assembly process.

[**0048**] To sum up, in the present invention, the action of continuous punching in a punch is used to form sheet fins, and a connection element is positioned at the rear end thereof. A mobile pressure piece is matched to pressurize the sheet fins onto the connection element one by one. The pressure piece is positioned at a die. A push device and a stepping control device are further matched to achieve the function of orderly stacking so that the sheet fins can be stacked one by one in recession way. Similarly, a feeder can be used to send in the connection elements and the manufactures for adjusting the number of stacked fins.

[**0049**] Although the present invention has been described with reference to the preferred embodiment thereof, it will be understood that the invention is not limited to the details thereof. Various substitutions and modifications have been suggested in the foregoing description, and other will occur to those of ordinary skill in the art. Therefore, all such substitutions and modifications are intended to be embraced within the scope of the invention as defined in the appended claims.

I claim:

1. An automatic shaping method of fin and connection element comprising the steps of:

(a) sending a material belt into a punch;

(b) performing shaping by continuous punching in the punch;

(c) initially shearing the material belt;

(d) shearing again the fin side of the material belt with a pressure piece to form sheet fins;

(e) driving the pressure piece to take the sheet fins to move downwards along a connection element; and

(f) stacking the sheet fins on the connection element one by one.

2. The automatic shaping method of fin and connection element as claimed in claim 1, wherein said steps of (b) and (c) are spaced at a period of shaping by continuous punching.

3. The automatic shaping method of fin and connection element as claimed in claim 1, wherein the pressure piece in said step (e) is driven in stepping way to recede a small distance each time.

4. The automatic shaping method of fin and connection element as claimed in claim 1, wherein positioning of the connection elements is performed in said step (e).

5. The automatic shaping method of fin and connection element as claimed in claim 4, wherein the connection elements are arranged in a row and are pushed in stepping way so that only one connection element enters the sheared position and is then positioned each time.

6. The automatic shaping method of fin and connection element as claimed in claim 5, wherein the positioning is achieved by clamping in opening/closing or insertion/extrusion way.

7. The automatic shaping method of fin and connection element as claimed in claim 5, wherein the height of the connection element can be adjusted.

8. The automatic shaping method of fin and connection element as claimed in claim 1, wherein the shaping by punching means performing operations of punching a central hole, shaping of outer appearance, and hole expansion and drawing on the material belt between a top die and a bottom die.

9. The automatic shaping method of fin and connection element as claimed in claim 1, wherein an action of punching and bending the edge is further included after the outer appearance is formed.

10. An automatic shaping structure of fin and connection element comprising:

a punch;

a winder for leading a material belt to enter said punch;

a continuous die in said punch and having a bottom die and a top die, said top die having a shearing portion and a plurality of punching portions;

a pressure piece disposed beside said top die and joined with a push device and a stepping control device, a shearing interface being formed between a side of said pressure piece and a periphery of said bottom die; and

a positioning device of connection element joined in said punch and situated outside a distal end of said bottom die of said continuous die, a connection element being positioned at said positioning device exactly below said pressure piece, said pressure piece being driven to stack punched sheet fins on said connection element one by one.

11. The automatic shaping structure of fin and connection element as claimed in claim 10, wherein a guide device is disposed on said bottom die so that the material belt can move between them.

12. The automatic shaping structure of fin and connection element as claimed in claim 10, wherein said connection elements are arranged at a feeder, and said feeder is used to send said connection elements into said positioning device of connection element one by one.

13. The automatic shaping structure of fin and connection element as claimed in claim 12, wherein said feeder has a slide piece, and said slide piece has a container for receiving a row of said connection elements, said slide piece being joined with a stepping push rod, two upper sides of said container being abutting walls of connection element, a clamping positioner driven by a hydraulic cylinder being at one side of the abutting walls.

14. The automatic shaping structure of fin and connection element as claimed in claim 13, wherein said stepping push rod of said feeder is driven by a stepper motor.

15. The automatic shaping structure of fin and connection element as claimed in claim 12, wherein said feeder has an adjustment baffle, and an upper end of said adjustment baffle contacts a lower end of said connection element.

16. The automatic shaping structure of fin and connection element as claimed in claim 15, wherein a height adjustment mechanism is joined at a lower end of said adjustment baffle on said feeder.

17. The automatic shaping structure of fin and connection element as claimed in claim 10, wherein said stepping control device is a small stepper motor to control the retraction and extension stroke of said pressure piece.

18. The automatic shaping structure of fin and connection element as claimed in claim 10, wherein said push device is a hydraulic cylinder.

* * * * *