March 28, 1967 L. LIPMAN 3,310,814

SWIMMING POOL COPING

Filed Jan. 7, 1965

FIG. 1

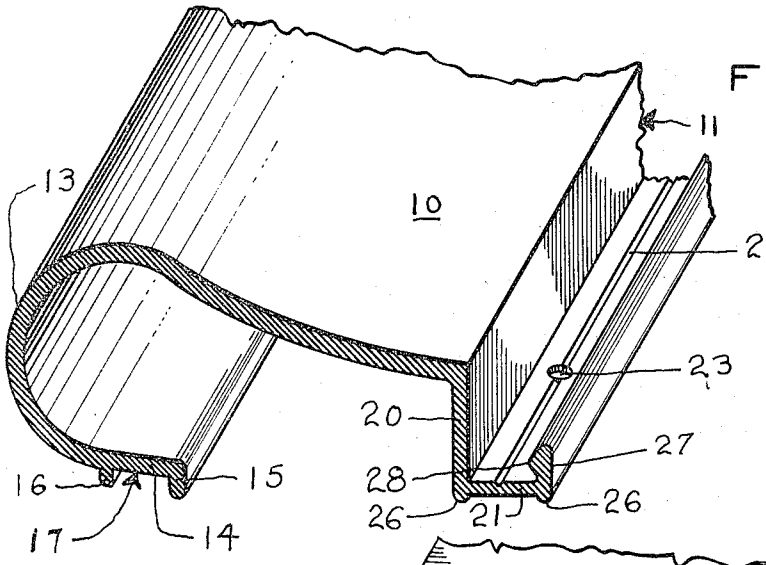

FIG. 2

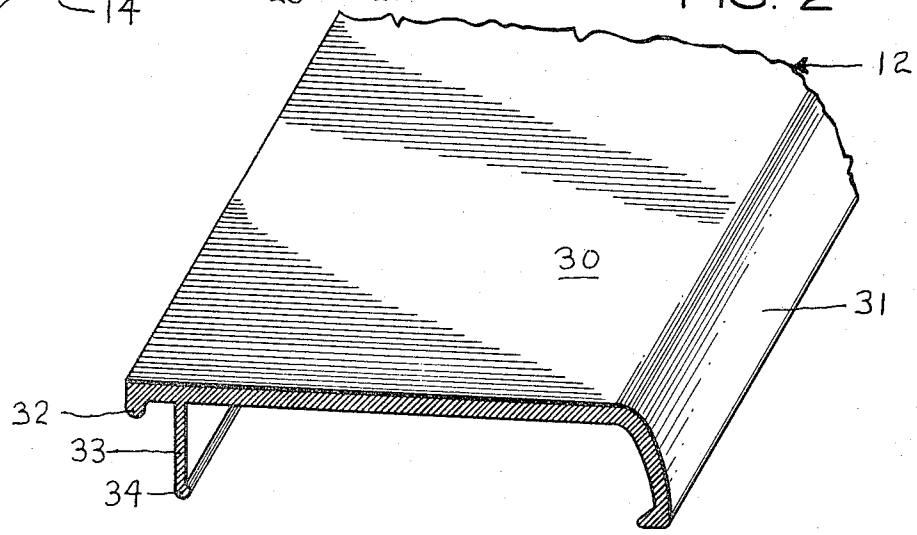

FIG. 3

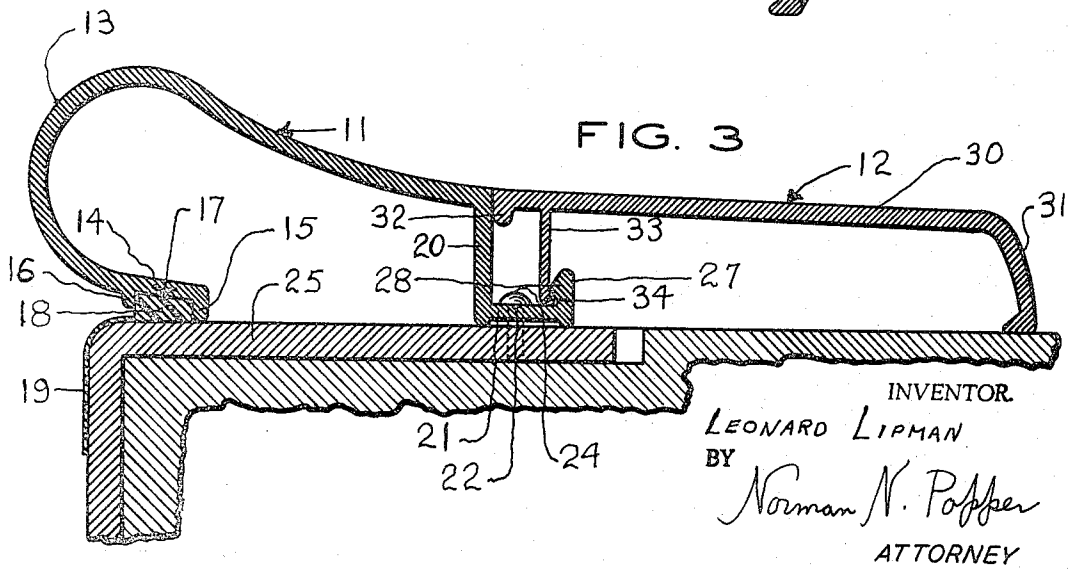

INVENTOR.
LEONARD LIPMAN
BY
Norman N. Popper
ATTORNEY

United States Patent Office 3,310,814 Patented Mar. 28, 1967

3,310,814

SWIMMING POOL COPING

Leonard Lipman, East Orange, N.J., assignor to Vincent C. Shanni, Scotch Plains, and Fred Katzman, New Market, N.J.

Filed Jan. 7, 1965, Ser. No. 423,978
11 Claims. (Cl. 4—172)

This invention relates generally to swimming pool copings, and particularly to two piece swimming pool copings in which the parts are snap-fitted together.

It is an object of the invention to provide a swimming pool coping which is easily installed, will accommodate liners having various size bead-edge dimensions, and does not require those edges to be fitted into a slot.

It is another object of the invention to provide a swimming pool coping which may be bolted in place, and the bolt then concealed.

Yet a further object of the invention is to provide a two-piece coping in which the edge-piece is prevented from being raised by the end-piece, which has a lever action, and thereby locks the liner in place.

Among the further objects of the invention is the elimination of a wood border on a pool in order to attach the coping. The coping has strength, durability, lightness, ease of shipping, assembling, and interlocking, resistance to chlorine deterioration, and adjustability to narrow or wide pool borders.

These objects and advantages, as well as other objects and advantages may be attained by the device shown by way of illustration in the drawings in which:

FIGURE 1 is a partial perspective view of an edge-piece of a two-piece swimming pool coping;

FIGURE 2 is a partial perspective view of an end-piece of a two-piece swimming pool coping; and

FIGURE 3 is a vertical sectional view of a two-piece swimming pool coping assembled and attached to the edge of a swimming pool, holding the bead edge of the swimming pool liner in place.

Swimming pool copings have been difficult to install, to engage with a pool liner, to anchor firmly in place, to be relatively tamper-proof. It has been found that a two-piece swimming pool coping, the parts of which could be snap fitted together, could overcome these disadvantages, and would have numerous other advantages.

Referring now to the drawings in detail, the present invention is illustrated by a swimming pool coping formed in two parts. There is an edge-piece **11** which is attached to the margin of the pool, and an end-piece **12** which is attached to the edge-piece. The edge-piece **11** has a gently sloping, contoured topwall **10**, rising toward the edge of the pool. This slope merges smoothly into a convex edge **13**, which curves around to a bottom portion **14**, which is generally horizontal. The bottom **14** has a downwardly extending flange **15**. Spaced away from the flange **15** in an outward direction, there is a lip **16**, shorter than the flange **15**, which defines a socket **17** that will receive a bead, or enlarged edge **18** usually provided on the edge of a swimming pool liner **19**. When the edge-piece **11** is firmly attached to the pool margin, as shown in FIGURE 3, the socket **14** will hold the bead **18** to keep the pool liner in place. The edge-piece **11** is provided with a generally vertical rear wall **20**, which is integrally dependent from the top wall **10**. The rear-wall **20** has a generally flat, integral, horizontal bottom-wall **21**. A locating channel **22** is provided in the center of the bottom-wall **21**. A hole **23** provides for the passage of a bolt **24**, or other attaching means, by which the edge-piece **11** may be attached at the edge of the pool wall **25**. The bottom-wall **21** can be provided with welts **26**, **26**, to insure firm positioning. A generally vertical, integral end-wall **27** extends upwardly at the edge of the bottom-wall **21**. This end-wall **27** has an inner-rib **28** opposite the rear-wall **20**.

The end-piece **12** is provided with an insert for snap-fit into the space between the rear-wall **20**, and the end-wall **27**, which defines a channel. The end-piece **12** has a generally horizontal, flat top-wall **30**. There is a convex outer-edge **31** dependent from the top-wall **30**, and defining the end thereof. A generally vertical, dependent lip or front wall **32** is formed integral with the top wall **30**. It is noted that the front-wall **32** is relatively short, with respect to an intermediate-wall **33**, which is spaced inwardly from the front-wall **32**, and depends from the top-wall **30**; the intermediate-wall **33** is sufficiently long so that when both the edge-piece **11** and the end-piece **12** are disposed on the same surface, they will not immediately embrace each other. The intermediate-wall **33** is integral with the top-wall **30**, and perpendicularly depends therefrom. An outer-rib **34** is formed on the outer side of the intermediate-wall **33**. The front-wall **32**, and the intermediate-wall **33** define an insert which will fit the channel defined by the end-wall **27** and the rear-wall **20**. When the end-piece **12** is disposed adjacent to the edge-piece **11**, with both resting on the same flat surface, the width of the insert is greater than the channel. Since both edge-piece **11** and end-piece **12** are made of aluminum, or some other relatively rigid material, which is slightly deformable, a sharp blow struck on the top-wall **30** of the end-piece **12**, will cause at least the intermediate-wall **33** to deform sufficiently to allow the insert to enter the channel. The inner-rib **28** will then be interlocked with the outer rib **34**, and cannot be easily disengaged by reason of the engagement of the front wall **32** with the rear-wall **20**. A strong prying force brought to bear on the end-piece **12** under the top wall **30** can however accomplish such disengagement when necessary. The end-piece **12** and edge-piece **11** are firmly interlocked by snap-fit, the bolt **24** is concealed, and the top walls **30**, **10** are coplaner. A neat, two-piece coping is provided with concealed attachment.

The foregoing description is merely intended to illustrate an embodiment of the invention. The component parts have been shown and described. They each may have substitutes which may perform a substantially similar function; such substitutes may be known as proper substitutes for the said components and may have actually been known or invented before the present invention; these substitutes are contemplated as being within the scope of the appended claims, although they are not specifically catalogued herein.

What is claimed:

1. A swimming pool coping comprising:
   (a) an edge-piece;
   (b) an end-piece;
   (c) a ribbed channel and a ribbed insert on the edge-piece and the end-piece;
   (d) the insert dimensioned too large for entry into the channel when the end-piece and edge-piece are disposed on a generally flat surface;
   (e) the edge-piece and the end-piece being made of rigid, yet slightly deformable material, whereby the channel and insert may be snap-fitted together with the ribbed portions interlocked.

2. A swimming pool coping comprising:
   (a) an edge-piece;
   (b) an end-piece;
   (c) a channel and an insert on the edge-piece and the end-piece interlocked with each other.

3. A swimming pool coping comprising:
   (a) the device according to claim 2, and
   (b) a generally convex outer end on the edge-piece.

4. A swimming pool coping comprising:

(a) the device according to claim 2, and
(b) a socket on the outer end of the edge-piece dimensioned to retain the bead on the edge of a swimming pool liner.

5. A swimming pool coping comprising:
(a) the device according to claim 2, and
(b) a fastening means attaching the channel to a surface upon which the edge-piece and end-piece rest.

6. A swimming pool coping comprising:
(a) the device according to claim 2, and
(b) a fastening means attaching the channel to a surface upon which the edge-piece and end-piece rest;
(c) the insert covering the fastening means.

7. A swimming pool coping comprising:
(a) the device according to claim 2, and
(b) a convex outer-edge on the end of the end-piece.

8. A swimming pool coping comprising:
(a) the device according to claim 2, and
(b) the channel defined at the inner-edge of the edge-piece;
(c) the insert defined at the inner-edge of the end-piece.

9. A swimming pool coping comprising:
(a) the device according to claim 2, in which the channel is defined by
(b) a generally vertical dependent rear-wall on the edge-piece;
(c) a generally flat bottom-wall integral with the rear-wall;
(d) a generally vertical end-wall integral with the bottom-wall;
(e) an inner-rib on the end-wall.

10. A swimming pool coping comprising:
(a) the device according to claim 2, in which the insert is defined by
(b) a generally vertical, dependent front-wall on the end-piece;
(c) a generally vertical, dependent intermediate-wall on the end-piece;

(d) an outer rib on the intermediate-wall.

11. A swimming pool coping comprising:
(a) the device according to claim 2, in which the channel is defined by
(b) a generally vertical, dependent rear-wall on the edge-piece;
(c) a generally flat bottom-wall integral with the rear-wall;
(d) a generally vertical end-wall, integral with the bottom-wall;
(e) an inner rib on the end-wall; and the insert is defined by
(f) a generally vertical, dependent front wall on the end-piece;
(g) a generally vertical, dependent intermediate-wall on the end-piece;
(h) an outer-rib on the intermediate wall;
(i) the insert dimensioned too large for entry into the channel when the end-piece and the edge-piece are disposed on a generally flat surface;
(j) the edge-piece and end-piece being made of rigid, yet slightly deformable material, whereby the channel and insert may be snap-fitted together with the inner-rib and outer-rib interlocked.

References Cited by the Examiner

UNITED STATES PATENTS

3,177,501	4/1965	Kwake	4—172
3,239,975	3/1966	Stier	52—169
3,271,787	9/1966	Clary	52—403

FOREIGN PATENTS

532,582	10/1954	Belgium.
539,191	7/1955	Belgium.

FRANK L. ABBOTT, *Primary Examiner.*

J. L. RIDGILL, *Assistant Examiner.*