V. DREW.

APPARATUS FOR THE ATTAINMENT OF CORRECT BREATHING.

APPLICATION FILED JULY 6, 1914.

1,134,320. **Patented Apr. 6, 1915.**

Fig. 1.

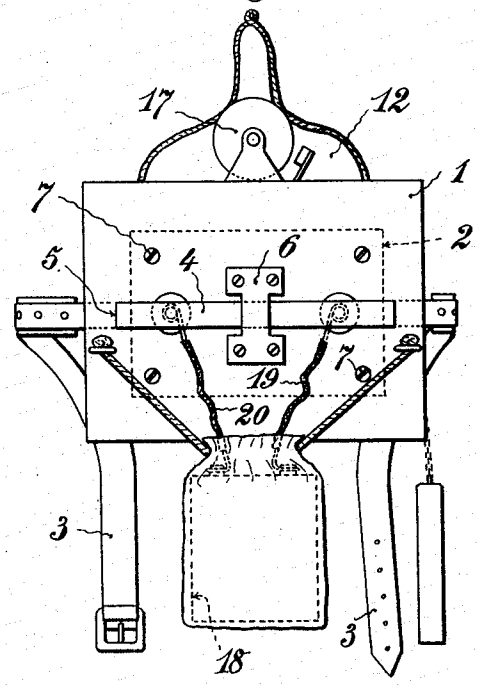

Fig. 2.

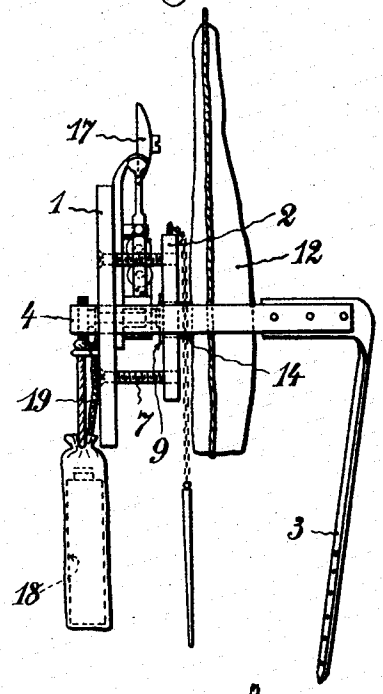

Fig. 3.

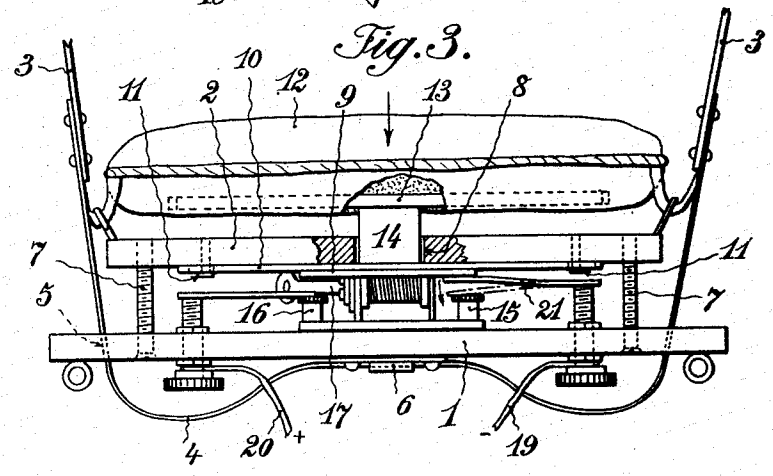

Witnesses

C. J. MacCarter

F. M. Quigley

Inventor

Vernon Drew

By

Henry T. Bright

Attorney

THE NORRIS PETERS CO., PHOTO-LITHO., WASHINGTON, D. C.

UNITED STATES PATENT OFFICE.

VERNON DREW, OF LONDON, ENGLAND.

APPARATUS FOR THE ATTAINMENT OF CORRECT BREATHING.

1,134,320. Specification of Letters Patent. Patented Apr. 6, 1915.

Application filed July 6, 1914. Serial No. 849,254.

To all whom it may concern:

Be it known that I, VERNON DREW, professor of lung training and singing, a subject of the King of Great Britain, residing at 14 Lavender Sweep, Lavender Hill, London, S. W., England, have invented a new and useful Apparatus for the Attainment of Correct Breathing; and I do hereby declare the following to be a full, clear, and exact description of the invention such as will enable others skilled in the art to which it appertains to make and use the same.

This invention has for its object the provision of a device whereby an acoustic or other visible warning is given at each correct inspiration of the person to which it is attached. To attain this object the natural distention of the body between the breast bone and the navel, resultant upon the correct intake of the breath is utilized to operate either mechanically or electrically the aforesaid acoustic or other visible signal. Or further if desired such warning device may be operated by means of a compressed fluid.

To enable the invention being fully understood one suitable method in which it can be applied will now be described by aid of the accompanying drawings, in which—

Figure 1 is a front elevation of the apparatus. Fig. 2 a side view thereof. Fig. 3 an underside view of Fig. 1 shown partly in section.

Referring to the drawings by numerals the apparatus consists of two members 1 and 2, supported in spaced relation one to the other. The front member 1 retains two straps or other connections 3 which are intended to encircle the waist of the user. The ends of these straps or the like 3 are secured to a flexible metal member 4 the two ends of which pass through slots 5 formed within the member 1, the central portion of such metal member 4 being firmly clamped to the outer surface of the member 1 by a clip or other device 6. The second member 2 which is held in spaced relation to the first described member 1 by suitable distance pieces 7 is formed with a centrally arranged aperture 8 across which is retained a resilient device 9. In the construction under consideration, this resilient device consists of a strip of extensible material 10 such as elastic webbing, which is held at either end by clamps 11. The portion which extends across the mouth of the aperture 8 is preferably strengthened by a section of leather or other non-conducting material for a purpose to be hereafter described. Attached to this member 2 is a padded device 12 which is intended to be pressed against the body at a point between the breast bone and the navel, by the act of affixing the aforesaid straps or the like 3 therearound. This device 12 consists internally of a whalebone or other framework 13 from the center of which projects a circular or other member 14 which is adapted to pass through, and to a sliding fit within, the aperture 8 in the member 2, so that its forward end contacts with the resilient device 9 to which, if desired, it may conveniently be secured.

Attached to the rear surface of the member 1 so that its terminals 15 and 16 are central thereof, is an ordinary electric bell or other audible warning device 17. The current is supplied by a suitable battery 18, which in the present arrangement is shown as depending from the member 1 to two connections 19 and 20 which pass through the member 1. The connection 20 is normally connected with the terminal 16 while the other connection 19 is formed with a spring member 21 which projects over, but not in contact with, the terminal 15, it requiring to be depressed before the circuit can be completed.

The operation is as follows:—The device having been attached to the user with the padded device 12 in correct position on the body, the person inhales, which if correctly performed results in the distention of the body between the breast bone and the navel carrying with it the padded member, the projection 14 being thus firmly pressed against the resilient device 9 which in turn bears against the spring member 21 causing it to contact with the terminal 15 with the consequent completion of the electric circuit through the warning device 17 which is thus operated.

What I do claim as my invention and desire to secure by Letters Patent is:—

1. A device of the class described comprising a frame, a movable member mounted on the frame, means normally holding said movable member in a given position with respect to the frame, a signal operated by a predetermined movement of said member, and means for attaching the device to the

body in position to effect movement of the member under the influence of the natural distention of the body resultant upon the correct intake of the breath.

2. A device of the class described comprising a frame, a member slidable in the frame, means for normally holding the member in a given position with respect to the frame, a signal operated by a predetermined movement of said member, and means for attaching the device to the body in position to effect such predetermined movement of the member under the influence of the natural distention of the body resultant upon the correct intake of the breath.

3. A device of the class described comprising a frame having an opening therein, a member slidable in the opening, a yieldable member extending across said member and normally holding the sliding member in a given position with respect to the frame, a signal operated by a predetermined movement of the yieldable member, and means for securing the device to the body in position to effect movement of the sliding member sufficient to impart signal operating movement to the yieldable member by the natural distention of the body resultant upon the correct intake of the breath.

In testimony whereof I have signed my name to this specification in the presence of two subscribing witnesses.

VERNON DREW.

Witnesses:

HERBERT HODDER,

C. HUGHES.

Copies of this patent may be obtained for five cents each, by addressing the "Commissioner of Patents Washington, D. C."