Nov. 1, 1932. L. Y. LASSITER 1,885,270

AUTOMATIC REMINDER

Original Filed April 17, 1926 4 Sheets-Sheet 1

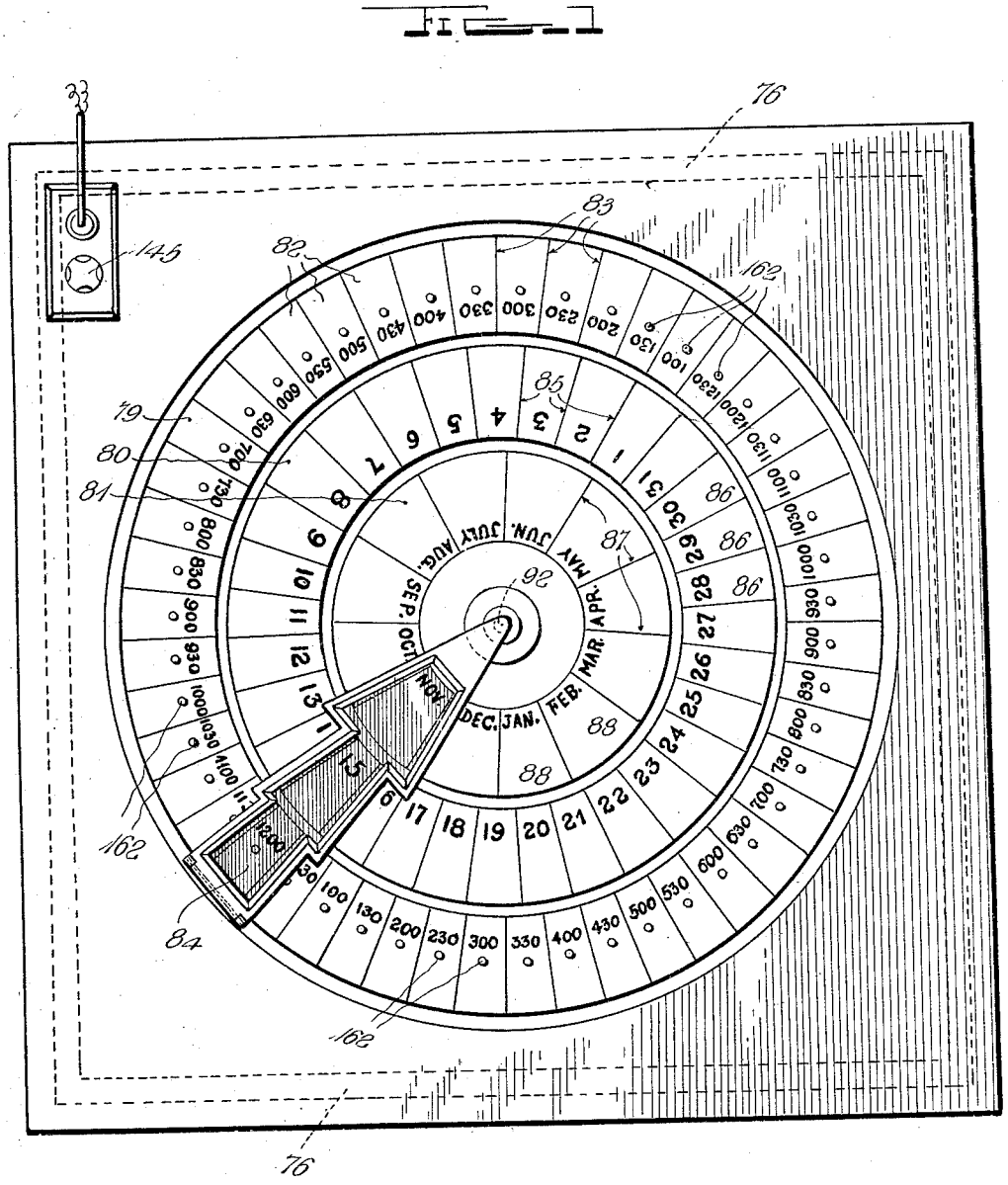

INVENTOR.
Leon Y. Lassiter
BY
ATTORNEY.

Nov. 1, 1932. L. Y. LASSITER 1,885,270

AUTOMATIC REMINDER

Original Filed April 17, 1926 4 Sheets-Sheet 2

FIG. 2

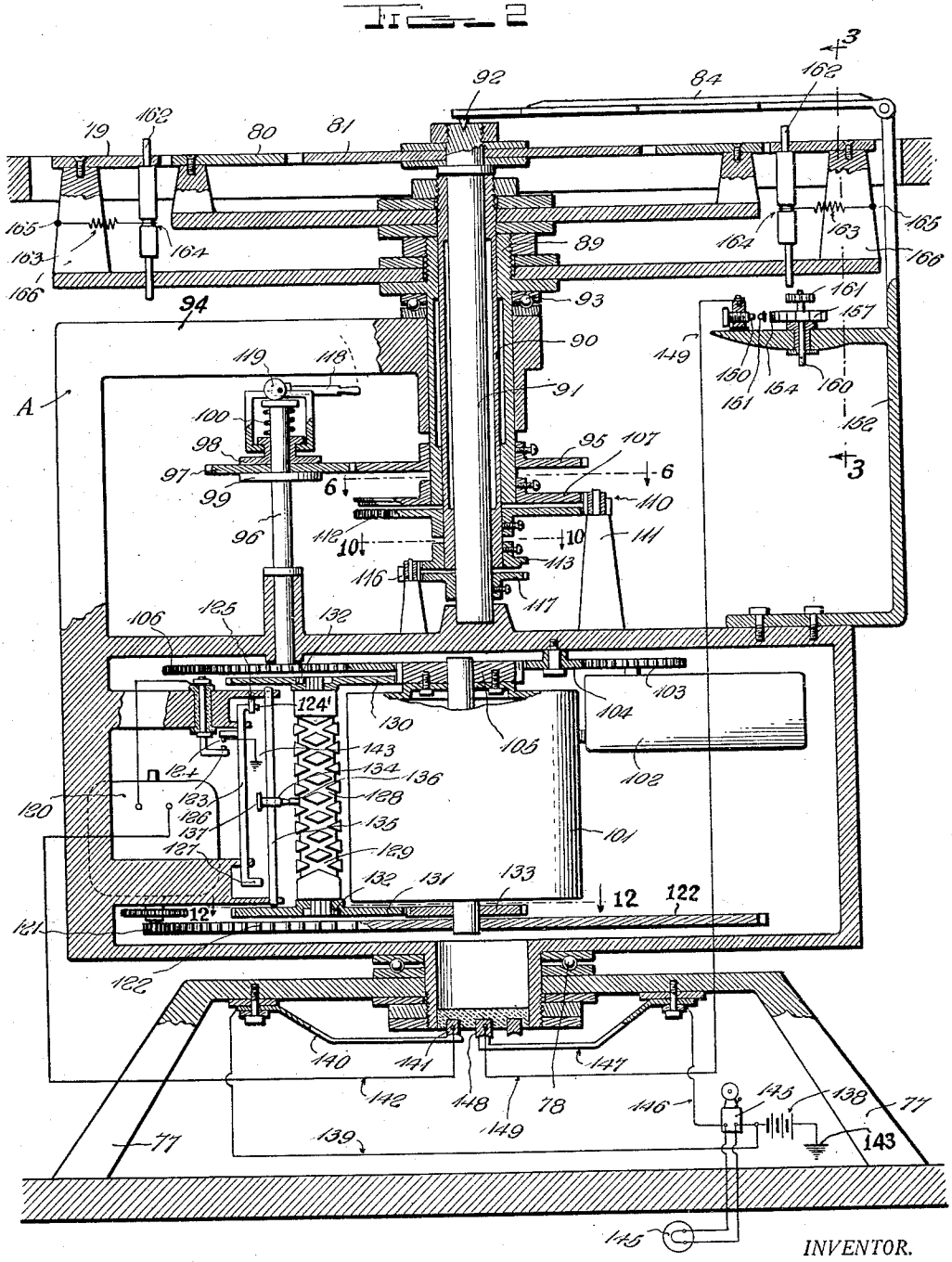

INVENTOR.

Leon Y. Lassiter

BY

ATTORNEY.

Nov. 1, 1932. L. Y. LASSITER 1,885,270

AUTOMATIC REMINDER

Original Filed April 17, 1926 4 Sheets-Sheet 3

FIG. 3

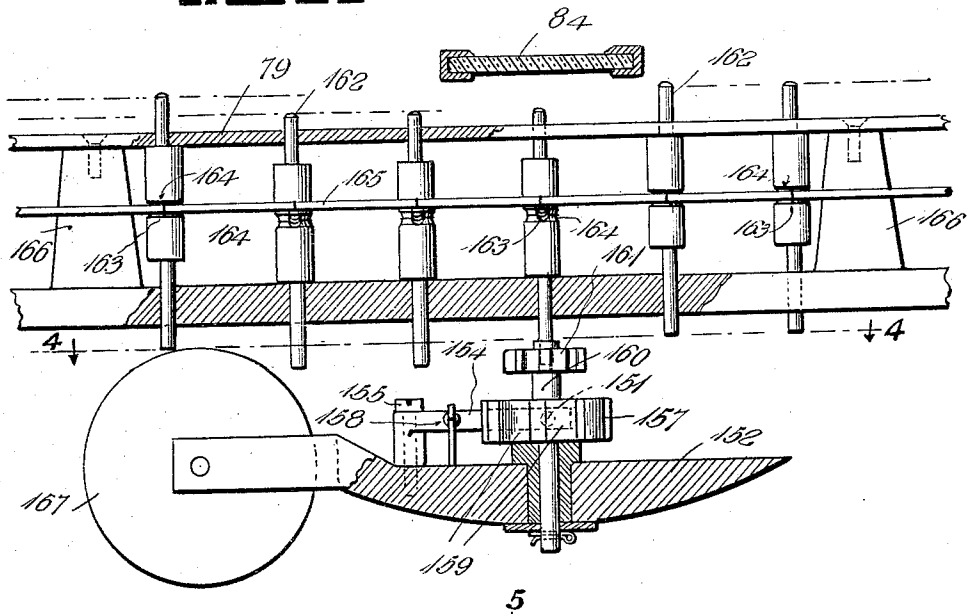

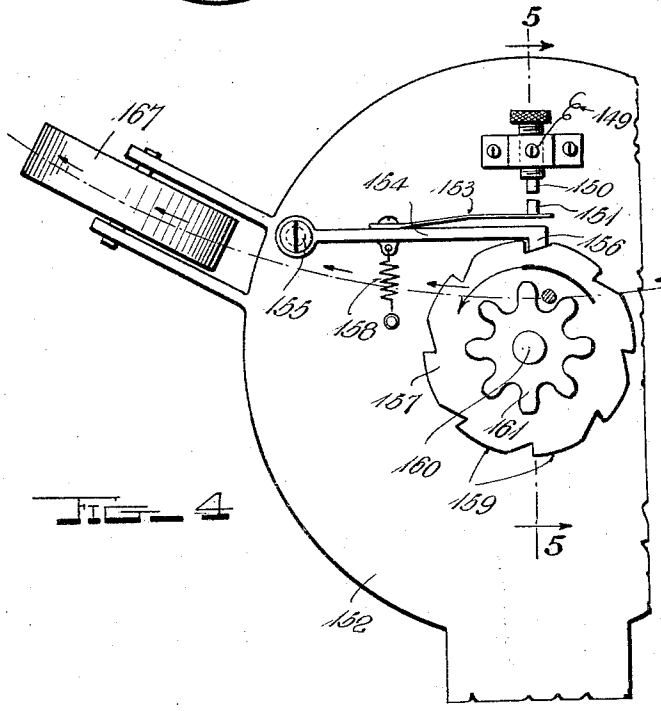

FIG. 4

FIG. 5

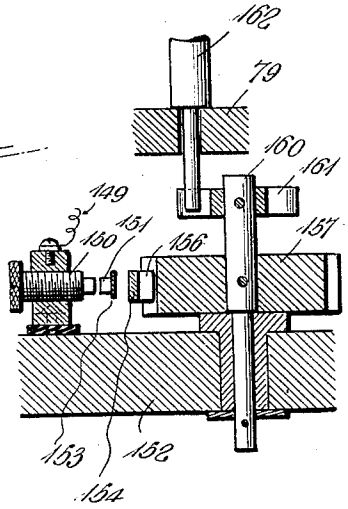

INVENTOR.

Leon Y. Lassiter

BY Pennett & Jones

ATTORNEY.

Nov. 1, 1932. L. Y. LASSITER 1,885,270

AUTOMATIC REMINDER

Original Filed April 17, 1926 4 Sheets-Sheet 4

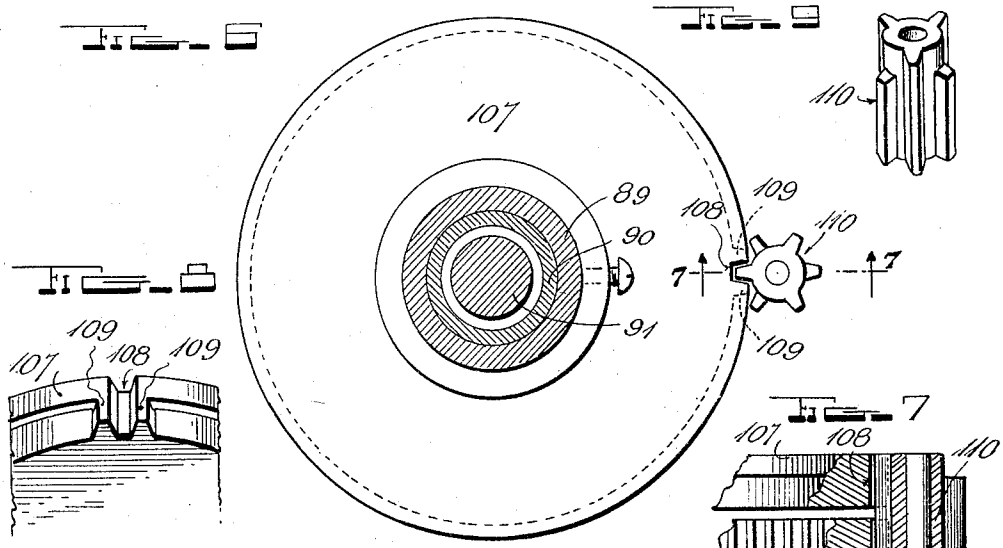

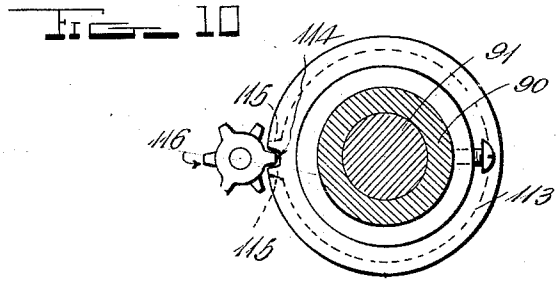

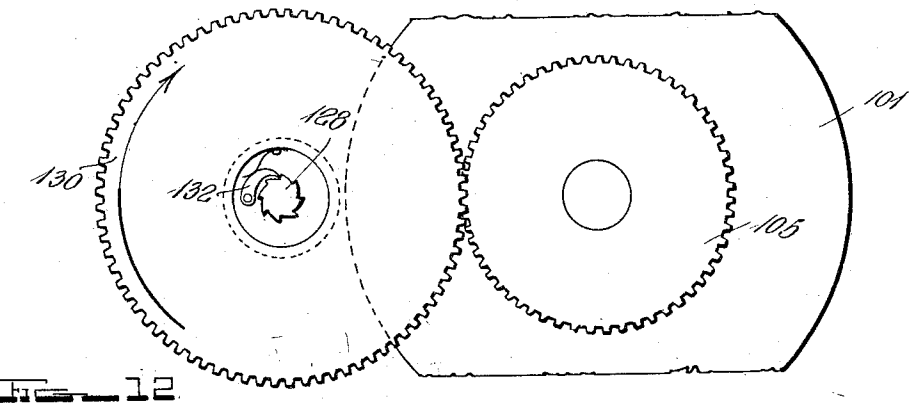

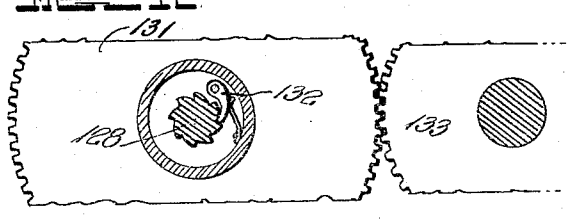

INVENTOR.

Leon Y. Lassiter

BY

ATTORNEY

Patented Nov. 1, 1932 1,885,270

UNITED STATES PATENT OFFICE

LEON Y. LASSITER, OF TULSA, OKLAHOMA

AUTOMATIC REMINDER

Original application filed April 17, 1926, Serial No. 102,756. Divided and this application filed April 9, 1928. Serial No. 268,694.

This application is a division of my application for patent for automatic reminders, filed April 17, 1926, Serial No. 102,756, which has issued as Patent No. 1,759,409, of May 20, 1930.

This invention comprehends the provision of a machine adapted to receive notations of matters about which the user desires to be reminded of in the future, and designed to perform this duty at the exact desired time.

In carrying out the invention, I contemplate the use of means having significance with regard to different periods of time, and adapted to have recorded thereon, with reference to some predetermined time in the future, the matter concerning which the user desires to be reminded, so that when said predetermined period arrives, the matter will be brought to view at some particular part of the machine.

Another important object of the invention resides in the provision of an automatically operable signal utilized to direct the attention of the person to the machine at the exact time that is desired to be reminded of the matter previously recorded on the machine.

Another object of the invention resides in the use of time controlled mechanism for operating the signal at a predetermined time in the future for the purpose above specified.

The invention further comprehends means having indicia thereon indicative of different periods of time, and upon which the subject-matter to be reminded of is recorded with reference to a particular period or periods, and time controlled mechanism to operate said means with a predetermined speed, so that said subject-matter will be brought to view on the machine at the exact time desired.

Another object of the invention resides in mounting the machine for rotation upon a suitable base, so that the machine can be arranged to conveniently record the subject-matter concerning which the user desires to be reminded in the future.

Other objects and advantages will appear from the following detail description when taken in connection with the accompanying drawings, the invention residing in the construction, combination and arrangement of parts as claimed.

In the drawings forming part of this application like numerals of reference indicate similar parts in the several views and wherein:

Figure 1 is a plan view of a machine constructed in accordance with the invention.

Figure 2 is a vertical sectional view therethrough.

Figure 3 is a sectional view taken on line 3—3 of Figure 2.

Figure 4 is a sectional plan view on line 4—4 of Figure 3.

Figure 5 is a section on line 5—5 of Figure 4.

Figure 6 is a section on line 6—6 of Figure 2.

Figure 7 is a section on line 7—7 of Figure 6.

Figure 8 is a fragmentary perspective view of a gear disk.

Figure 9 is a perspective view of a gear element.

Figure 10 is a section on line 10—10 of Figure 2.

Figure 11 is a plan view of the motor and associated gears.

Figure 12 is a section on line 12—12 of Figure 2.

A machine constructed in accordance with my invention may be designed to remind one of things in the future by minutes, hours, days, weeks, months and years, separately or all combined in one machine. In the embodiment of the invention as herein disclosed, it is possible to be reminded of things thought of a day before, and from that period down to a fraction of an hour.

The casing or cabinet of the machine is indicated at 76, and has arranged therein a frame-like structure indicated generally at A and which supports the mechanism to be hereinafter described. This frame-like structure is mounted on a stationary base 77 by a thrust bearing 78, whereby the same can be rotated to promote the convenience of the user in recording thereon the matter desired to be reminded of in the future. The means indicative of the different periods of time

consists of a plurality of disk-like members, preferably three in number and indicated at 79, 80 and 81 respectively. These members are arranged in concentric relation and all in the same horizontal plane as clearly shown in Figure 2. The outer disk 79 is divided into forty-eight sections 82 by score lines 83, and each section is provided with indicia representing thirty minutes of time, the sections being marked in consecutive order as will be readily understood. This disk is mounted for rotation and makes one revolution every twenty-four hours, thus bringing the sections singly beneath a bracket arm 84 in consecutive order. This compartment is provided with a vision glass or panel of a size to overlie a portion of each disk, so that the corresponding sections of the respective disks can be readily viewed through the glass. This disk 79 is rotated at a constant predetermined speed, and the matter desired to be reminded of is recorded on one of the sections 82 thereof directly under the particular time desired.

The disk 80 is divided by score lines 85 into thirty-one sections 86, one for each day of the month, and these sections are numbered consecutively from one to thirty-one as illustrated. This disk 80 is also mounted for rotation, but makes but one complete rotation every month, being tripped intermittently by the disk 79 at each complete rotation of the latter. However, should a month contain less than thirty-one days, it is possible to turn the disk 79 by hand to make up the total of thirty-one days, and set the date of the machine properly, this being accomplished in a manner to be hereinafter described. Each section of this disk may also be used to record matter concerning which the person desires to be reminded in the future, it being that the sections of the disk 80 cooperate with the sections of the disk 79 for this purpose.

The innermost disk 81 is divided by score lines 87 into twelve sections 88, one for each month of the year, the sections having the months appearing thereon as illustrated. This disk is also mounted for rotation, but makes only one complete rotation a year. The months of the year are arranged at the tops of said sections, and the remaining portions thereof can be used to record data which the person desires to be reminded of. As above stated, all of these disks are arranged in the same plane and substantially flush with the top of the casing 76, so that the notations or indicia can be more easily and conveniently recorded thereon. It might here be stated that the means upon which the notations of matter are recorded can be constructed of material which permits the notations to be erased therefrom when desired, or sheets of paper cut the exact size and placed upon the various disks may be used, and subsequently removed after each rotation and kept for future records if so desired.

The disk 79 is supported by the upper end of a hollow tubular shaft 89 in which is arranged a similar shaft 90 for the disk 80, while operated within the shaft 90 is a shaft 91 which supports the disk 81. The inner end of the bracket arm 84 is provided with a bearing 92 for the upper end of the shaft 91, the lower end of which is loosely fitted in a bearing socket in the frame A. The tubular shaft 89 turns in a bearing 93 carried by the inner end of an arm 94 forming part of the frame structure A, and which arm supports the weight of all the disks, the shaft therefor, and the trip mechanism for controlling the rotation of the disks in a manner to be hereinafter described.

Carried by the shaft 89 is a gear 95 which is operated to rotate the shaft from a motor actuated shaft 96 journaled upon the frame structure A in parallelism with the shaft 89. The shaft 96 carries a gear 97 which is held fixed with relation thereto by means of plates 98 and 99 respectively which are arranged above and below the gear 97. The plate 98 is held against the gear 97, to clamp the latter therebetween and the plate 99, under the influence of a coiled spring 100. When these parts are operatively associated the shaft 89 is rotated by the motor 101, the latter being regulated by a clock mechanism indicated generally at 102, so that the disk 79 is rotated with a constant predetermined speed for the purpose above stated. This clock mechanism includes a gear 103 which meshes with an idlet reduction gear 104 which also meshes with the gear 105 of the motor. This last mentioned gear meshes with a gear 106 carried by the lower end of the shaft 96 as clearly illustrated, so that motion is transmitted to the last mentioned shaft from the motor 101.

Also carried by the lower end of the shaft 89 is a flange 107 provided with a slot 108 (Figs. 6, 7 and 8) and two teeth 109. This flange is utilized to intermittently rotate a small six-toothed gear 110 journaled on a shaft 111 supported by the frame A. Every other tooth of the gear 110 is relatively short to allow the flange 107 to rotate without turning the gear 110, except at the point where the slot and teeth 109 are located. The teeth of the gear 110 mesh with a sixty-two toothed gear 112 carried by the shaft 90, so that when the gear 110 is turned it trips the disk 80 turning the latter a predetermined distance. In other words, when the flange 107 engages the gear 110, it turns the latter two teeth for every full rotation of the disk 79, while the gear 110 in turn rotates the gear 112 two teeth, which turns the disk 80 one thirty-first of a revolution, or the distance of one section, equivalent to one day. The same operation

is carried out with regard to the disk 81, in that this disk is moved one-twelfth of a rotation with each complete rotation of the disk 80. For this purpose I employ a flange 113 (Figs. 2 and 10) carried by the lower end of the shaft 90, and provided with a slot 114 and two teeth 115. These teeth engage a small six toothed gear 116 once during each rotation of the flange 113, turning the gear 116 a distance of two teeth. The gear 116 meshes with a twenty-four toothed gear 117 carried by the lower end of the shaft 91, and consequently when the gear 16 is rotated two teeth it imparts rotation to the gear 117 two teeth which of course is one-twelfth of a rotation of the disk 81. By reason of this construction and arrangement of parts it is obvious that each disk, from the outermost to the innermost disk trips the next adjacent disk at the completion of each rotation thereof, so that the year, month and day sections carried by the various disks having the notations recorded thereon of the matter to be reminded of in the future, are simultaneously brought to positions beneath the sight compartment at the proper time. For instance, the outmost disk 79 makes one complete rotation every twenty-four hours, and then trips or rotates the disk 80 the distance of one section. The disk 80 in turn makes only one rotation in every thirty-one days, but at the completion of this rotation the said disk 80 by the mechanism above-described, rotates the disk 81 the distance of one section, the latter mentioned disk making one complete rotation every twelve months.

As hereinabove stated, it is possible to rotate the disk 79 by hand at the end of any particular month having less than thirty-one days, so that the machine can be properly reset. In order to accomplish this purpose, I employ a lever 118 which is provided with an eccentric-like cam 119 arranged to compress the coil spring 100 when the lever 118 is partly turned. Incident to this operation, tension is released from the plate 98 to allow the gear 97 to turn freely between the plates 98 and 99 respectively. In other words, this operation entirely releases the shaft assembly from the motor 101, so that the disk 79 can be turned by hand without interfering with the other disks for the purpose specified.

It will be noted that the bracket arm 84 is pivotally mounted at its outer end to the upper end of an upright 152 of the frame A, so that said bracket arm may be swung to move its bearing 92 into and out of engagement with the upper end of the shaft 91, in which position of the arm its transparent panels are disposed to permit inspection therethrough of the indicating disks. It will be noted that the shafts 89, 90 and 91 are mounted in the horizontal arm 94 of the frame A, so that on swinging the bracket arm 84 outwardly and releasing members 95, 107, 112, 113 and 117 from the shafts 89, 90 and 91, said shafts 89, 90 and 91 and the indicating disk carried thereby may be removed as a unit by withdrawing them upwardly through their bearing on arm 94, said bearing on arm 94, the bearing for the lower end of the shaft 91, and the bearing 92 for the upper end of said shaft 91, serving to stably support the shafts and indicating disks when in working position while allowing of their ready and convenient removal when required.

The motor 101 is preferably of the spring operated type, and is automatically rewound at predetermined periods. For this purpose I employ an electric motor 120 having a small gear 121 which meshes with a large gear 122 carried by the shaft of the motor 101. The electric motor 120 is normally idle and is called into use only for the purpose of rewinding the motor 101 when the occasion requires. The motor 120 is of course arranged in a normally open circuit including a switch which is automatically operated to make and break the circuit at predetermined periods. This switch includes a fixed contact 123 electrically connected with the motor 120, and a movable contact 124. Carried by the frame like structure A is a resilient clamp 125 arranged to receive and engage an arm 124′ at the upper end of a bar 126 carrying the movable contact 124 and normally hold the contact spaced above the fixed contact 123. The bar 126 has its lower end offset as at 127, and this bar forms part of means for automatically controlling the operation of the switch. A shaft 128 is formed with a spiral multiple groove 129, and supports at opposite ends gears 130 and 131 respectively. Each of the gears is associated with the shaft by means of a ratchet 132 in a manner whereby the said gears are singly employed to rotate the gear 128 in the same direction. The gear 130 meshes with the gear 105 of the motor 101 and when rotated thereby, turns the shaft 128 in one direction. During this operation of the shaft 128 the other gear 131 idles over the ratchet mechanism, being rotated by means of a small gear 133 carried by the lower end of the shaft of the motor 101, and directly above the gear 122 carried by the same shaft. An arm 134 is mounted to slide upon a suitable guide 135, the arm being arranged at a right angle to the shaft 128, and equipped with a roller 136 which moves in the groove 129 of said shaft. This arm carries a cross head 137 which operates between the arm 124′ and the offset extremity 127 of the bar 126. Now, when the motor 101 operates to rotate the various disks above-mentioned, use is made of the gear 130 to rotate the shaft 128 in one direction, during which rotation of said shaft the gear 131 idles. While the shaft 128 is turning in this particular direction the arm 134 is gradually moved downwardly in the direction of the offset ex-

tremity 127 of the bar 126, and ultimately engages said extremity to move the bar downwardly upon a downward movement of the arm in the same direction. With this operation, the movable contact 124 is withdrawn from the resilient clamp 125 and lowered into engagement with the fixed contact 123, thereby closing the circuit to the electric motor. This motor then operates to rotate the large gear 132 in a direction to rewind the spring of the motor 101, during which time the gear 130 is employed to rotate the gear 131 and shaft 126 in the same direction as that first named. When the shaft 128 is driven by the gears 132 and 131 it is rotated at increased speed and, being of the multiple groove type, the arm 134 is moved upward on the shaft until the cross head 137 engages the arm 124' and raises the bar 126 and the movable contact 124, spacing the latter from the fixed contact 123 to break the circuit. The ratchets 132 above-mentioned permit use of the shaft 128 in the manner just described. During this movement of the arm in an upward direction, the arm 124' is returned to its initial position and engaged by the resilient clamp 125. While the gear 131 is being used to rotate the shaft 126, the gear 130 at the upper end of this shaft idles. In this manner the motor 101 is automatically rewound from time to time and before it reaches a run down condition.

The circuit for the electric motor 120 has its source at 138, the current passing therefrom through a wire 139 to a brush arm 140. This brush arm is arranged to engage a contact 141 which of course is insulated from the machine and also from a signal circuit to be presently described. The current then passes through wire 142 and the motor windings to the movable contact 124 of the switch for said motor, and when the switch is closed the current passes through the motor to the ground 143.

I also make use of an automatically operated signal for directing the attention of the user to the machine, when the particular sections of the disks carrying the matter to be reminded of reach their positions directly beneath the vision glass of the sight compartment 84. This signal is indicated at 145 and may be of any desired type, included in a normally open circuit the source of which is indicated at 138. The current passes through the signal or signals and the wire 146 to a brush arm 147, which is adapted to engage a contact 148, which construction is necessary due to the fact that the frame-like structure is mounted for rotation for the convenience of recording the matter to be reminded of on any desired section of the disks above referred to. The contact 148 is of course insulated from the machine, a wire 149 leading from this contact to one of a pair of contacts 150, the other contact of said pair being indicated at 151 (Figs. 2, 4 and 5). These contacts are supported adjacent each other but normally spaced apart. The contact 150 is stationary and mounted on a bracket 152, being insulated therefrom, while the contact 151 is carried by the outer end of a leaf spring 153 attached to an arm 154. This arm is pivoted and grounded on a post 155. The free end of the arm 154 is offset as at 156 to cooperate with a ratchet wheel 157, being held normally engaged with said wheel through the instrumentality of a spring 158, the latter also operating to hold the contacts 150 and 151 spaced apart. As the ratchet wheel 157 rotates in the direction indicated by the arrow, the offset portion 156 of the arm 154 is engaged by the adjacent cam-like surface 159 of said wheel, thereby moving the arm 154 in a direction to cause the movable contact 151 to engage the fixed contact 150 and close the circuit to the signal. The circuit remains closed until the next notch in the ratchet wheel is brought to a position to allow the arm 154 to be moved thereinto by means of the spring 158. Consequently the length of time which the signal remains in operation is determined by the length of the cam-like surfaces 159 between the notches on said wheel, and can be regulated by varying the length of said cam-like surfaces. This ratchet wheel is carried by a shaft 160 journaled in the bracket arm 152, while also carried by the same shaft and disposed above said wheel is a gear 161. This gear is provided with one tooth for each notch in the ratchet wheel 157, and is rotated a distance of one tooth at a time.

For this purpose I employ a plurality of plungers 162, which are carried by the outer disk 79 and mounted for sliding movement thereon. There are forty-eight of these plungers 162, one for each section of the disk 79, each plunger being placed at the top of each section and exactly half way between the score lines on said disk, so that it turns the gear 161 to operate the signal when the plunger reaches a position directly beneath the center of the sight compartment 84. Any one or more plungers can be selectively used as the occasion may require, as it is only necessary to push the particular plunger downwardly from the disk 79, being associated with the latter for sliding movement. The lower end of the plunger then engages the gear 161 to turn the latter and operate the signal at a predetermined time. Normally the plungers 162 terminate above the gear 161, thereby passing over the latter. For the purpose of holding any plunger either in its normal position, or in its lowered position I employ a tension spring 163, one end of which is received by a groove 164 provided in the plunger at an appropriate point in its length, while the other end of the spring is attached to an annular rod 165 which ex-

tends around the posts or uprights 166. It is of course to be understood that the plungers 162 engage the gear 161 turning the latter to both open and close the circuit to the signal, after allowing the signal to operate a reasonable length of time, which as above stated is regulated or determined by the length of the cam-like surfaces 159 on the ratchet wheel. The gear 161 lies in a direct path of all of the plungers 162, so that if any one of the plungers is moved downwardly to an active position, it engages and operates the gear to close the circuit to the signal.

While the plungers are manually pushed downwardly to their active positions, I contemplate means for automatically returning the plungers to their normal positions after they have served their purpose. To this end I employ a roller 167 which is arranged in the path of the plungers 162, so that after each plunger has turned the gear and moved away therefrom, it passes over the roller 167 and is forced upwardly to its normal position. As above stated, the tension spring 167, with which each plunger is equipped, holds the plunger in either of its two positions. It is to be also borne in mind that the gear is arranged directly beneath the sight compartment 84, so that the signal is operated when the particular plunger being used reaches a position directly under the sight compartment.

While it is believed that from the foregoing description the nature and advantages of the invention will be readily apparent, I desire to have it understood that I do not limit myself to anything herein shown and described, and that such changes in the construction and arrangement of parts may be resorted to when desired as fall within the scope of what is claimed.

Having thus fully described my invention, I claim:—

1. In a machine of the character described, a base, a frame rotatably mounted on the base, a plurality of concentric shafts journaled on the frame, a plurality of disk-like indicating members arranged in concentric relation and lying in the same plane, said disks being mounted on said shafts and the upper surface of each disk being divided into sections indicative of different periods of time and having spaces to receive inscribed data pertinent thereto, and time-controlled mechanism carried by the frame and in gear with said shafts for rotating one of said disks constantly at a predetermined speed and others of said disks intermittently and at predetermined speeds, whereby certain corresponding sections of the respective disks are adapted to be simultaneously brought into registering relation for inspection at a predetermined time.

2. In a machine of the character described, a frame including a bottom portion, an upright rising from the bottom portion and a horizontal arm overhanging the bottom portion, the said bottom portion and horizontal arm being provided with alined bearings, concentric shafts mounted in said bearings and extending upwardly above the horizontal arm, indicating disks mounted upon said shafts in concentric relation, said disks being each divided into a plurality of sections designated by a particular period of time and having spaces for the inscription of data pertinent thereto, means carried by the frame for rotating said shafts, and an arm hinged to the frame at one end and having a bearing at its free end engaging the upper end of one of said shafts, said arm being provided between said bearing and its hinged end with transparent panels through which the disks may be viewed.

3. In a machine of the character described, a base, a frame rotatably mounted on the base and having a bottom portion, an upright rising from the bottom portion and a horizontal arm extending above and parallel with the bottom portion, said bottom portion and arm being provided with alined bearings, a plurality of concentric shafts journaled in said bearings and extending upwardly through and above the horizontal arm, a plurality of disk-like indicating members mounted on said shafts in concentric relation and each divided into a plurality of sections designated by a particular period of time and having spaces for the inscription therein of data pertaining thereto, gearing mounted on the frame for driving the shafts and disks, one constantly at a predetermined speed and the others intermittently and at predetermined speed, and a bracket hinged to the upright and adapted to be disposed radially above the disks and provided with transparent panels through which the underlying sections of the disks may be simultaneously viewed.

In testimony whereof I affix my signature.

LEON Y. LASSITER.