Sept. 15, 1931. W. D. EMERY 1,822,961

ORIFICE FITTING

Filed March 2, 1929 2 Sheets-Sheet 1

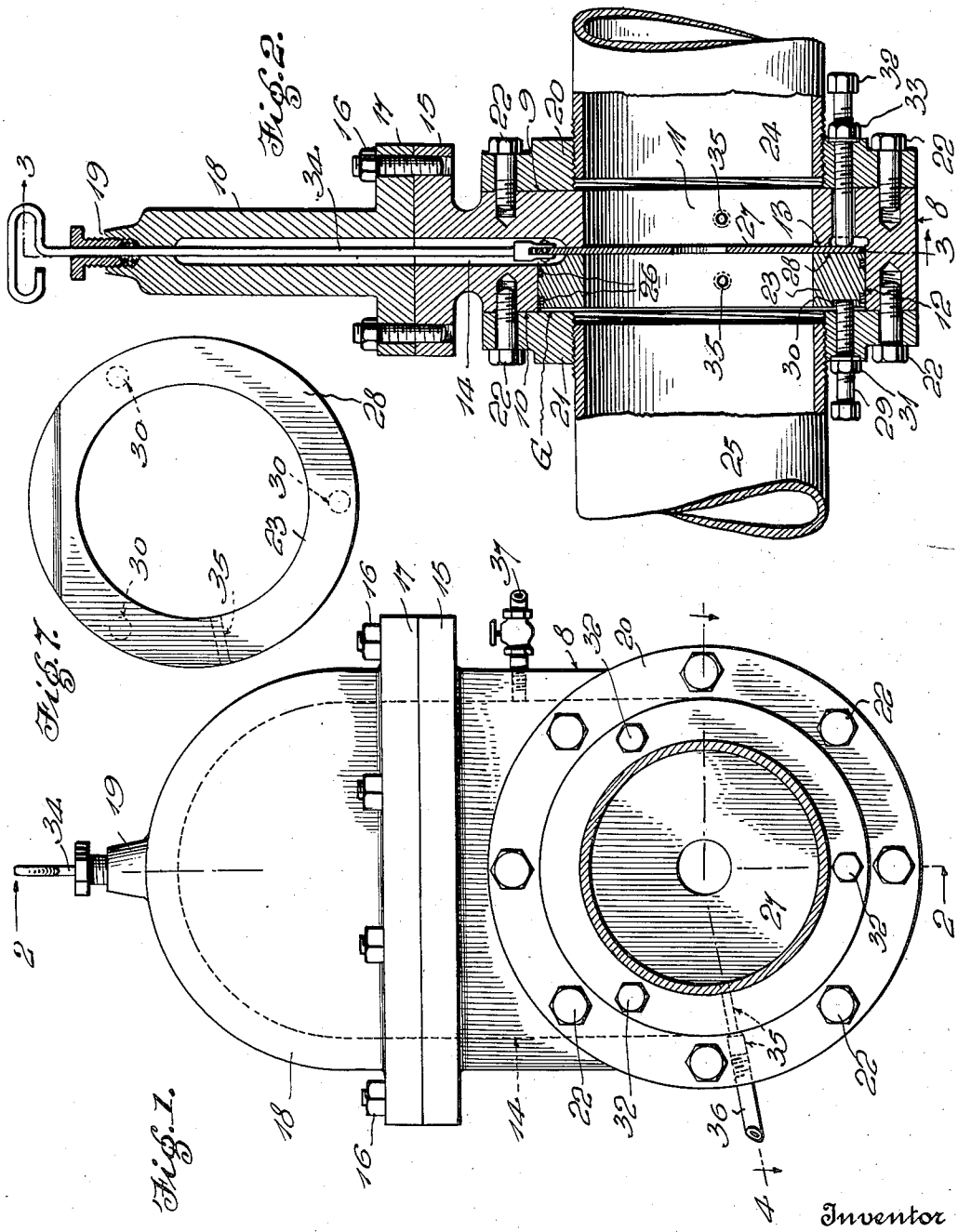

Inventor
Waldo D. Emery

Witness
H. Woodard

By H. B. Willson & Co
Attorneys

Sept. 15, 1931. W. D. EMERY 1,822,961

ORIFICE FITTING

Filed March 2, 1929 2 Sheets-Sheet 2

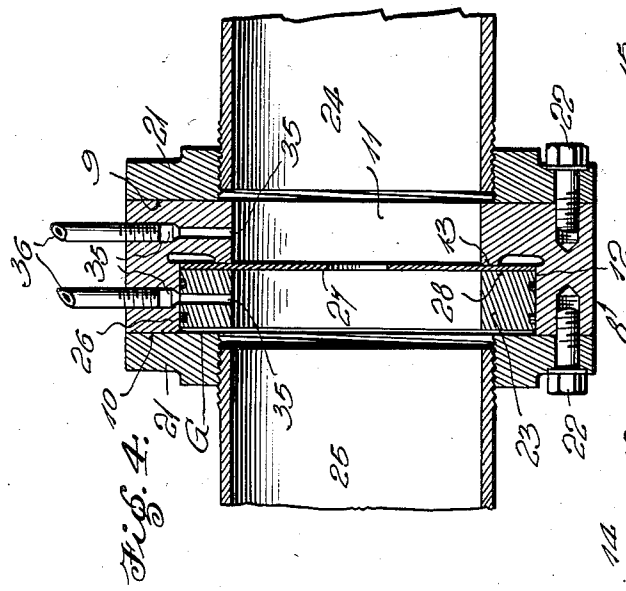

Fig. 4.

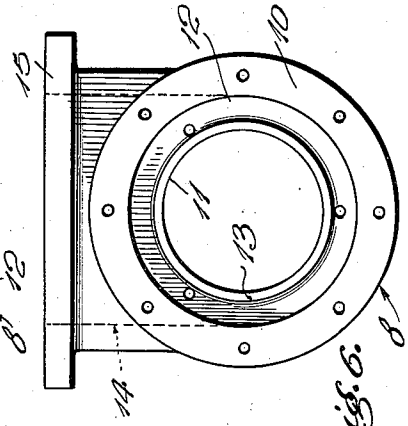

Fig. 6.

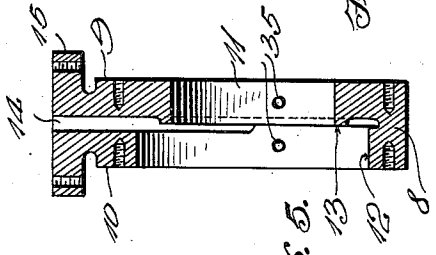

Fig. 5.

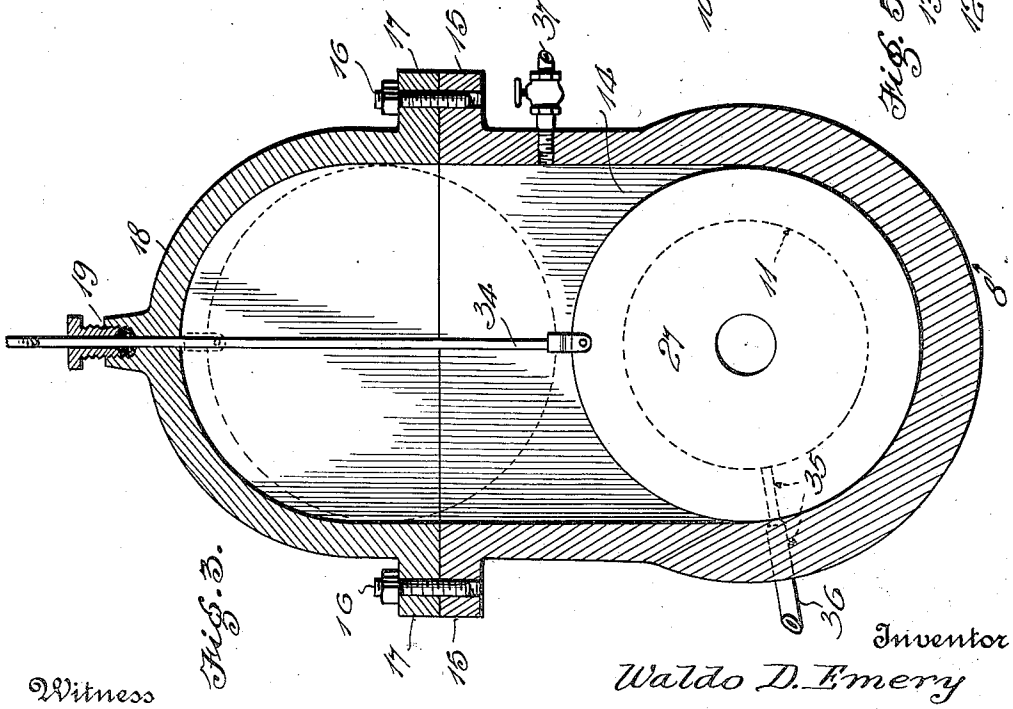

Fig. 3.

Witness
N. Woodard

Inventor
Waldo D. Emery

By H. B. Wilson & Co
Attorneys

Patented Sept. 15, 1931

1,822,961

UNITED STATES PATENT OFFICE

WALDO D. EMERY, OF TULSA, OKLAHOMA

ORIFICE FITTING

Application filed March 2, 1929. Serial No. 343,930.

The invention relates to improvements in devices used for securing orifice-plates in pipe lines. Measurement by means of the orifice-meter necessitates changing of the orifice-plate in the line as different sized orifices are required for different rates of flow.

The principal object of the invention is to provide a new and improved fitting for securing the orifice-plate in the line in an accurate manner and providing for quick and easy removal of the plate and substitution of another without shutting off the fluid flow through the line.

A further aim is to provide a simple, compact and positive fitting for securing and permitting changing of the plate, which fitting will duplicate the proper conditions affecting the co-efficient of the plate, so that accuracy obtained by the standard orifice-flange-union can be obtained with this fitting. Original co-efficients for thin orifice-plates were established by extended tests which made use of the plate clamped between two halves of an orifice-flange-union. These coefficients are the basis of measurements by orifice-meters. In duplicating the above-mentioned conditions, this fitting is so designed that the distance from the upstream side of the orifice-plate to the part of the line in the fitting, is kept at a minimum. As this distance is increased, the effect of rough or burred edges of the pipe affects the accuracy of measurement by "venturi-ing" or disturbing the flow through the orifice-plate, causing possible loss of accuracy. The construction herein disclosed for holding the plate in position in the fitting results in duplicating desired conditions obtained by the standard orifice-flange-union and allows a thin plate to be used without danger of distortion.

With the foregoing and minor objects in view, the invention resides in the novel subject matter hereinafter described and claimed, description being supplemented by the accompanying drawings.

Fig. 1 is a side elevation of the improved fitting, the pipe line being shown in transverse section.

Fig. 2 is a vertical sectional view on line 2—2 of Fig. 1.

Fig. 3 is a vertical sectional view on line 3—3 of Fig. 2.

Fig. 4 is a horizontal sectional view on the correspondingly numbered line of Fig. 1.

Fig. 5 is a vertical sectional view through the main body portion of the fitting.

Fig. 6 is a side elevation of the part shown in Fig. 5.

Fig. 7 is a side elevation of the ring which normally holds the orifice-plate against a seat and is itself movable against said seat upon removal of said plate.

The form of construction herein disclosed may be considered as preferred and while such construction will be rather specifically described, it is to be understood that within the scope of the invention as claimed, numerous variations may be made.

The numeral 8 on the drawings denotes a one-piece body having two opposed flat sides 9—10, said body being formed with a flow-bore 11 from one of said sides to the other. The end 12 of this flow-bore which opens through the side 10, is enlarged and an orifice-plate seat 13 is provided at the juncture of the two diameters of said bore. An orifice-plate-removal-passage 14 is formed in the body 8 and extends from the portion of the bore-enlargement 12 adjacent the seat 13, said body 8 being peripherally closed fluid-tightly with the exception of said passage 14. At the outer end of this passage, body 8 is flanged as at 15 and is detachably secured by appropriate fasteners 16 to another flange 17 on a removable cap or hood 18, the outer end of this cap being provided with an appropriate stuffing box 19 for a purpose to appear. Ordinary pipe fitting flanges 20—21 are secured tightly against the flat sides 9—10 of the body 8, by cap screws or the like 22.

The flange 21 extends inwardly beyond the wall of the bore-enlargement 12 and co-operates with this enlargement in forming a groove G in which a shiftable ring 23 is received for movement longitudinally of the bore 11. The internal diameter of this ring 23 is preferably the same as the smaller diameter of the bore, and these diameters are preferably the same as the internal diameters of the pipe sections 24—25 which are threaded

into the flanges 20—21 respectively. Any desired way may be employed to prevent leakage of fluid around the ring 23 to the passage 14, said ring being shown as provided with peripheral packing means 26 for this purpose.

A thin orifice plate 27 extends across the flow-bore 11 and is received between the orifice-plate-seat 13 and the ring 23, the latter also being provided with an orifice-plate-engaging-surface or seat 28. Jack screws 29 are threaded through the flange 21 at circumferentially spaced points, only one of said screws however being shown. The inner ends of these screws are received in pockets 30 in one side of the ring 23 and it will be clear from the number of these pockets in Fig. 7, how the screws 29 are spaced apart. The screws 29 normally hold the ring 23 in a position at which the peripheral portion of the orifice-plate 27 is tightly clamped between said ring 23 and the orifice-plate-seat 13, said screws being locked in position by lock nuts or the like 31. Upon loosening of the screws 29 however, the orifice plate 27 may be removed through the passage 14 into the cap 18, and it will be observed that the path on which said orifice plate is withdrawn into said cap, is free from obstructions. For the purpose of loosening said orifice plate 27 from its seat 13 when removal is to be effected, additional jack screws 32 have been shown threaded through the flange 20. These screws are normally in such positions as to prevent them from interfering with proper seating of the plate 27 against the seat 13 and they may be locked in these positions by lock nuts or the like 33. When it is desired to remove plate 27, however, the lock nuts 31—33 are loosened, the screws 29 are loosened and the screws 32 are tightened so that the latter loosen the plate 27 from the seat 13. This plate 27 is then outwardly movable through the passage 14, a rod 34 being shown connected with said plate for this purpose, said rod extending outwardly through the passage 14 and cap 18 and being received in the stuffing box 19. After movement of plate 27 outwardly through the passage 14, the screws 32 are again backed out to their normal positions and the screws 29 are again tightened. The result is that these screws 29 force the ring 23 into fluid-tight contact with the seat 13, thereby entirely cutting off communication between the flow-bore 11 and the pasasge 14.

After seating of the ring 23 against the seat 13, the fasteners 16 may be released or removed and the entire cap 18 detached. Obviously, the rod 34 and plate 27 are removed bodily with the cap 18 and it is then an easy matter to substitute another orifice-plate for the plate 27. This having been done, the cap, rod and substitute plate are again properly positioned upon the remainder of the fitting and the fasteners 16 are used to secure the cap to the body 8. The screws 29 are now backed out to the required amount and the screws 32 are tightened, thereby forcing the ring 23 away from the seat 13. This having been done, the rod 34 is forced inwardly, whereupon the plate 27 will enter between ring 23 and seat 13, it being of course understood that the screws 32 are again backed outwardly out of the path of the incoming plate, before this plate is forced to position. Now the screws 29 are tightened to effect clamping of the orifice-plate 27 between the ring 23 and the seat 13, and the lock nuts of all of the screws are finally tightened. The fitting is thus in readiness for further conducting fluid and it will be clear that no escape of such fluid has taken place during the interchange of orifice-plates.

Suitable openings 35 are shown for establishing communication between meter connections such as 36 and the interior of the fitting. An appropriate vent 37 is also shown for relieving pressure from the interior of the cap 18 and the passage 14 after seating the ring 23 against the seat 13 or plate 27.

It will be seen from the foregoing that novel and advantageous provision has been made for carrying out the objects of the invention, and attention is again invited to the fact that while the disclosure herein made has been rather specific, numerous variations may be carried out within the scope of the invention as claimed.

I claim:—

1. An orifice-fitting comprising a one-piece body having two flat external sides disposed in closely spaced parallel planes, said body being formed with a bore from one of said sides to the other, one end of said bore being of one diameter and the other end of greater diameter, providing an annular orifice-plate-seat disposed transversely of and between the ends of said bore, said body being provided with an orifice-plate-removal-passage from said bore to one of its ends, said passage being in substantially the plane of said seat, an orifice-plate contacting with said seat, a ring confined totally within the larger end of said bore, said ring having parallel flat sides, the innermost of which abuts said orifice-plate and holds it against said seat, the outer flat side of said ring being inwardly spaced from one of said flat sides of said body, annular pipe-attaching flanges secured against said flat sides of the body and of less internal diameter than the larger bore end, whereby one of said flanges retains said ring in said larger bore end, screws threaded through the inner edge portion of said one flange and abutting said outer side of the ring for normally holding the latter in orifice-plate clamping position, said screws being of a length to force said ring against said seat upon removal of said orifice-plate, and sealing means in the periphery of said ring fluid-

tightly engaging said larger bore end to prevent fluid escape to said orifice-plate-removal-passage.

2. An orifice-fitting comprising a one-piece body having two flat external sides disposed in closely spaced parallel planes, said body being formed with a bore from one of said sides to the other, one end of said bore being of one diameter and the other end of greater diameter providing an annular orifice-plate-seat disposed transversely of and between the ends of said bore, said body being provided with an orifice-plate-removal-passage from said bore to one of its ends, said passage being in substantially the plane of said seat, an orifice-plate contacting with said seat, a ring confined totally within the larger end of said bore, said ring having parallel flat sides, the innermost of which abuts said orifice-plate and holds it against said seat, the outer flat side of said ring being inwardly spaced from one of said flat sides of said body, annular pipe-attaching flanges secured against said flat sides of the body and of less internal diameter than the larger bore end, whereby one of said flanges retains said ring in said larger bore end, screws threaded through the inner edge portion of said one flange and abutting said outer side of the ring for normally holding the latter in orifice-plate clamping position, said screws being of a length to force said ring against said seat upon removal of said orifice-plate, sealing means in the periphery of said ring fluid-tightly engaging said larger bore end to prevent fluid escape to said orifice-plate-removal-passage, a hood detachably secured to said end of said body and of a size to receive said orifice-plate when removed through said passage, and a withdrawal rod connected with said orifice-plate and passing through the outer end of said hood.

3. An orifice fitting comprising a body having means for connecting it in a line and provided with a flow-bore, an orifice plate extending across said flow-bore, said body being provided with a transverse passage through which said orifice plate may be withdrawn and being otherwise peripherally closed fluid-tightly, a fluid-tight hood detachably secured to said body and adapted to receive said orifice plate when withdrawn from its normal position, the withdrawal path of said orifice plate being free from obstructions, the outer end of said hood being provided with a stuffing box, a withdrawal rod for said orifice plate connected with the latter and passing slidably through said stuffing box, and combined means for fluid-tightly clamping said orifice plate in operative position and for cutting off communication between said flow-bore and said hood when said orifice plate is withdrawn into the latter, said combined means embodying manually actuated means for positively holding it against movement under the influence of fluid within the line.

4. In an orifice fitting, a body having a flat external side, said body being formed with a stepped flow-bore, the largest diameter of which opens through said flat side of said body, the portion of said body at the juncture of the two diameters of said flow-bore constituting an orifice plate seat, a clamping ring received in the larger diameter of said flow bore and having its outer periphery fluid-tightly engaged with the peripheral wall thereof, and an annular pipe attaching flange secured against said flat side of said body; said flange projecting radially inward beyond said peripheral wall of said enlarged diameter of the flow-bore, an orifice plate between said ring and said seat, and clamping means passing through said inwardly projecting portion of said flange and abutting said ring, said clamping means serving either to retain said ring in contact with said orifice plate or to retain said ring in contact with said seat when the orifice plate is withdrawn.

In testimony whereof I have hereunto affixed my signature.

WALDO D. EMERY.