May 5, 1925. 1,536,303

A. B. MILLER

WASHING MACHINE

Filed Nov. 30, 1923 2 Sheets-Sheet 1

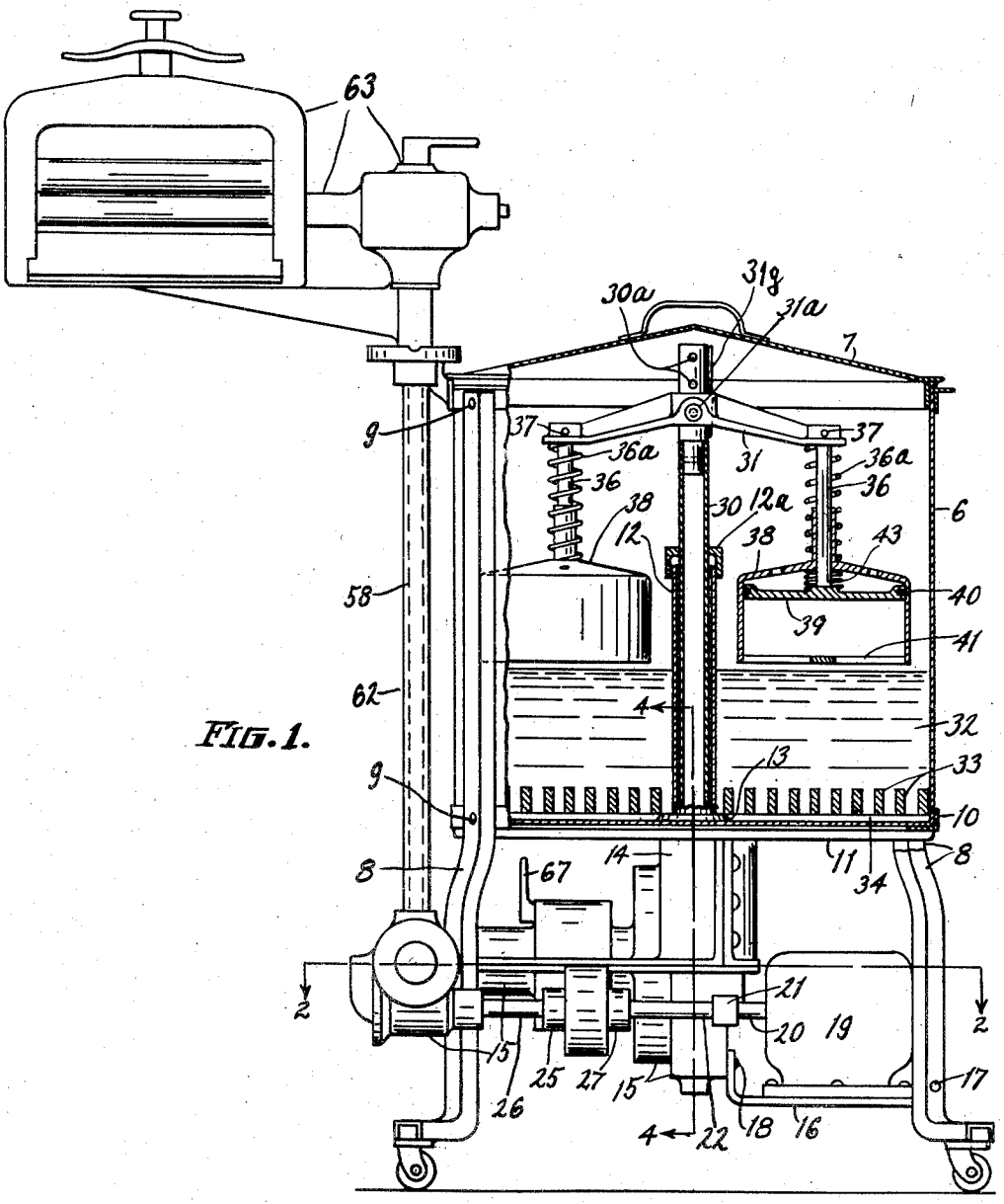

FIG. 1.

INVENTOR:
Andrew B. Miller.
BY A. M. Carlsen
ATTORNEY.

May 5, 1925. 1,536,303

A. B. MILLER

WASHING MACHINE

Filed Nov. 30, 1923 2 Sheets-Sheet 2

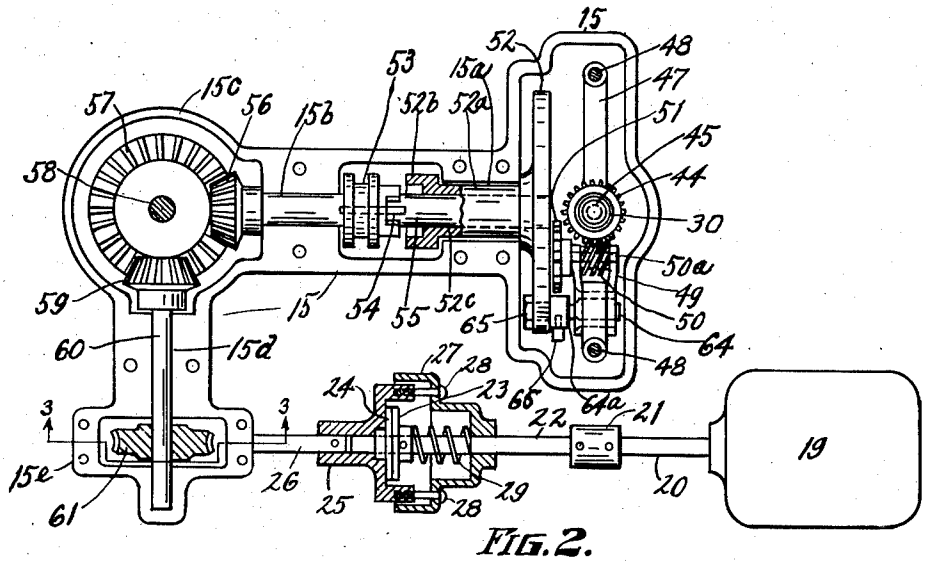

FIG. 2.

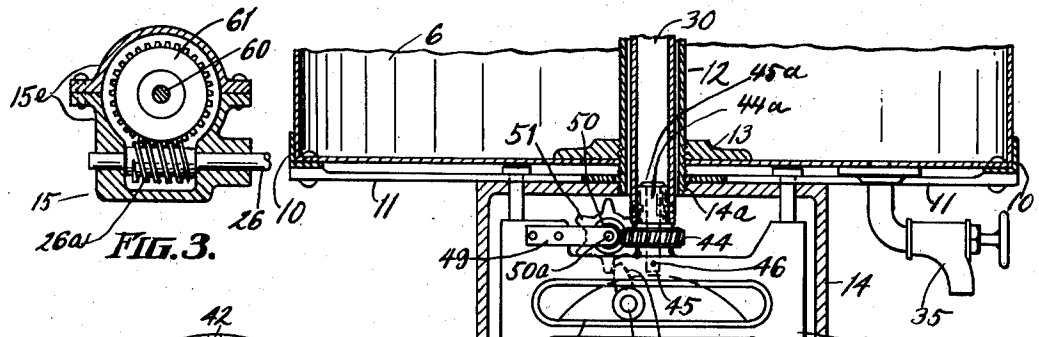

FIG. 3.

FIG. 4.

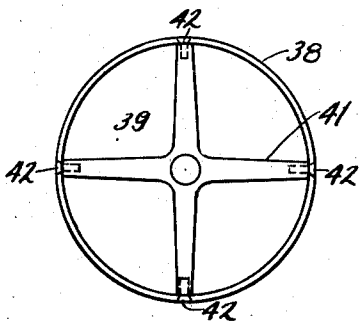

FIG. 5.

INVENTOR
Andrew B. Miller.
BY A. M. Carlson
ATTORNEY.

Patented May 5, 1925. 1,536,303

UNITED STATES PATENT OFFICE.

ANDREW B. MILLER, OF BALDWIN, WISCONSIN, ASSIGNOR TO TWIN-WASHER MANUFACTURING COMPANY, OF ST. PAUL, MINNESOTA.

WASHING MACHINE.

Application filed November 30, 1923. Serial No. 677,640.

To all whom it may concern:

Be it known that I, ANDREW B. MILLER, a citizen of the United States, residing at Baldwin, in the county of St. Croix and State of Wisconsin, have invented certain new and useful Improvements in Washing Machines, of which the following is a specification.

My invention relates to washing machines and the object is to provide an efficient, reliable and simple machine particularly adaptable for household washings but also adaptable for laundries in general.

In the accompanying drawings:

Fig. 1 is a front elevation of my washing machine, the cylindrical tub and part of the mechanism within it being shown in vertical central section.

Fig. 2 is a partly sectional, enlarged elevation of the power transmitting mechanism of my washing machine about as on line 2—2 in Fig. 1.

Fig. 3 is a vertical sectional elevation on line 3—3 in Fig. 2.

Fig. 4 is an enlarged sectional elevation as on line 4—4 in Fig. 1 with the grate of the tub omitted.

Fig. 5 is an enlarged bottom view of either one of the cylindrical pounders 38 in Fig. 1.

Referring to the drawings by reference numerals 6 is a cylindrical tub with a removable cover 7, and supported on legs 8, the latter shown as being made of channel iron, three in number, and each extended vertically on the outside of the tub and secured thereto as at 9.

The bottom of the tub may be reenforced by a perimetral ring 10 of angle iron to which are secured the extremities of a spider 11.

In the center of the tub I place a vertical, tubular column 12 the lower end of which is threaded to engage the threaded fixed collar 13 on the bottom of the tub, thence projecting downwardly and engaging the threaded top 14^a of a transmission housing cover 14 normally bearing against the under side of spider 11 (see Fig. 4).

15 is the lower half of a transmission housing of irregular shape as best shown in Figs. 1 and 2.

16 is a small platform suitably secured as at 17 and 18 to one of the supporting legs and the transmission housing, respectively. On said platform I secure preferably an electric motor 19 the drive shaft 20 of which is connected by a collar 21 to a primary drive shaft 22 the other end of which carries a friction drive disc 23 normally contacting with a similar free disc 24 on the same shaft (see Fig. 2). The latter disc also contacts with a flanged collar 25 fixed on a worm shaft 26 arranged in alignment with shaft 22. Another flanged cap 27 is placed loosely on shaft 22 and is adjustably connected with cap 25 by a number of machine screws 28 the adjustment of which varies the pressure on the friction discs 23—24 by varying the compression of a helical coil spring 29 placed on shaft 22 between disc 23 and the inner end of cap 27. This device allows the discs to transmit all normal driving power to worm shaft 26, but any excessive resistance in the latter shaft will cause the discs to slip and thus avoid breakage of shafts etc.

The transmission mechanism which will presently be further described is designed to give reciprocal and rotary movement to a vertical, tubular shaft 30 within the column 12, the said shaft projecting above the column (see Fig. 1) and the upper end adapted to carry a yoke 31 on which are secured the clothes cleaning means of my device. Said means consist of two cylindrical devices adapted to reciprocate vertically and simultaneously rotate horizontally, contacting with clothes (not shown) immersed in water 32 (Fig. 1). A sectional grate is placed on the bottom of tub 6 and consists of horizontally spaced bars 33 spaced above the bottom of the tub by transverse cleats 34 (Fig. 1). The clothes to be washed will rest on the bars 33 and all sediment loosened from the clothes during the washing process will settle on the bottom of the tub from where it can be drained off with the wash water through a tap 35 (see Fig. 4).

Each of the cylindrical pounder devices consists of a vertical rod or shaft 36 the upper end of which is secured as at 37 in one end of the yoke 31. On said rod is slidably mounted an inverted cup-shaped cylinder 38 within which is a piston 39 secured to the lower end of the rod. Said piston is provided with a water tight metallic packing ring 40. The open, lower end of the pounder

is provided with a light spider 41 secured to it as at 42 (Fig. 5), said spider contacting with the clothes in the water when the cylinder moves downwardly. A helical coil spring 36[a] under compression, about rod 36, and between the yoke 31 and top of cylinder 38 causes the cylinder to come down with considerable force, the spider 41 compresses the clothes until the resistance of the latter stops the movement of the cylinder; but continued downward movement of the yoke will cause spring 36[a] to compress and the rod 36 will move down, causing piston 39 to move down also and compressing air and water below it, into the clothes. Upward movement of the yoke, following the down stroke, will cause the rod 16 to first bring the piston back to its original position and then the piston and cylinder are both raised as far as the yoke will travel upward. A cushion spring 43 is placed about rod 36 between the cylinder and piston. The reciprocal movement described will of course operate both diametrically opposite pounders simultaneously, the downward pressure of the spiders 41 and the following compression stroke of the pistons engaging the clothes with enough gentle but forcible action to loosen the dirt or foreign matter in the clothes. As previously mentioned, the yoke shaft 30 is rotated as well as reciprocated. Thus when the reciprocating action above described has taken place the pounders are simultaneously being rotated so that during each reciprocal action they are turned slightly and when the yoke has made a complete revolution within the tub the cylinders will have reciprocated a great many times, each time coming down in a different place and thus causing a thorough cleansing action on all the clothes immersed in the water.

The reciprocating and rotary movement of the above described parts is accomplished by the following means:

In the lower end of yoke shaft 30, which projects into the transmission housing (see Fig. 4) I secure the shank 44[a] of a worm gear 44 rotatable on a pin 45 secured at 46 in a cross-head 47 slidable on vertical guides 48 within the transmission housing 14—15. The pin 45 extends upwardly through the worm gear and its shank and is headed (as 45[a]) at its upper end. In the upper part of the cross-head and adjacent the worm gear 44 I provide two horizontally spaced arms 49 bored to provide bearings for the shaft 50[a] of a worm 50 engaging the worm gear 44. A sprocket 51 mounted on one end of shaft 50[a] and adapted to be partly rotated at certain intervals, rotates worm 50 which in turn rotates gear 44 and the yoke shaft 30.

The means for rotating sprocket 51 consists of parts attached to a driven disc 52 rotatably mounted adjacent the cross-head 47, said disc being operatively connected with the primary driving means previously described, said operative connection being as follows:

The disc 52 has an elongated hub 52[a] adapted to rotate in a bearing 15[a] of the transmission housing 15 and terminating in an enlargement 52[b] formed with suitable jaws comprising part of a jaw clutch of which 53 is the sliding part, slidably keyed at 54 on a shaft 55 one end of which rotates in the bore 52[c] of disc 52 and the other end in a bearing 15[b] of the housing 15, beyond which the shaft projects into an enlargement 15[c] of the housing. The latter end of the shaft carries a bevel pinion 56 meshing with a bevel gear 57 keyed on a vertical shaft 58. The latter gear is rotated by a bevel pinion 59 fixed on a shaft 60 rotating in a bearing 15[d], and the opposite end of said shaft carries a fixed worm gear 61 within an enlargement 15[e] of the transmission housing (see Figs. 2 and 3). The worm gear 61 is rotated by a worm 26[a] fixed on the previously described shaft 26 (or being integral therewith) which is in alignment with the motor shaft 20.

62 (Fig. 1) is a fixed, vertical column adjacent the side of the tub and housing the vertical shaft 58, rotated by bevel gear 57, to provide power for any suitable type of wringer 63 located with relation to the tub about as shown in Fig. 1.

64 (Figs. 2 and 4) is a crank pin secured at 65 to the disc 52 and normally engaging in a horizontal slot 47[a] of the cross-head 47 and adapted to reciprocate the latter vertically on its guides 48 when the disc is rotated. The pin 64 may have an enlargement 64[a] adjacent the disc in which I secure a radially projecting tooth 66 arranged to engage a tooth of the sprocket 51 (see Fig. 4) when the cross-head 47 is in its upper position, giving the sprocket and its worm 50 a partial turn. This movement is of course transmitted to the worm gear 44 on lower end of shaft 30. For each revolution of the disc the same turning movement takes place, thus revolving the pounders step by step when above the water.

30[a] (Fig. 1) is a row of vertically spaced holes in the upper end of shaft 30, and 31[a] is a headed spring pin in yoke 31 adapted to engage in any one of the holes 30[a], thus permitting vertical adjustment of the yoke 31 and pounders according to the volume of water and clothes in the tub.

In the use of the machine, the operator first puts the wash water in the tub, immerses the clothes to be washed and sets the pounders at the desired height. The cover is then placed on the tub and the power turned on. If the source of power is an electric motor the speed of the drive shaft 20—22—26 will be too high and the first speed reduction may be in worm and gear

26[a]—61. Pinion 59 and gear 57 provide a second speed reduction, their relative sizes being governed by the required speed of the wringer operating shaft 58. The disc driving shaft 55 is of course rotated by pinion 56 and rotates the disc when the clutch members 53—52[b] are engaged. If not engaged the operator manipulates a hand lever 67 operating any suitable well known clutch sliding means (not shown) for bringing the slidably keyed clutch member 53 into driving contact with the jaw clutch member 52[b] of the disc 52. The reciprocating and rotating movement of the plungers commences as soon as the jaw clutches are engaged. The length of time for washing a batch of clothes will of course vary according to the condition of the clothes and the material of which they are made. After completion of a washing, or as often as deemed necessary the wash water is drained off carrying with it the sediment which settles on the bottom of the tub.

In Fig. 1, 12[a] is a stuffing box closing the top of column 12 about the shaft 30; and 31[g] is a feather key fixed in shaft 30 for the yoke 31 to slide on without rotating.

What I claim is:

1. In a clothes washing machine and mounted in suitable framework, a vertically disposed pounder shaft, a horizontally disposed drive shaft having at one end a disc with a crank pin in it; a vertically guided yoke having a horizontal slot engaged by the crank pin; said yoke being swivel-jointed to the lower end of the pounder shaft, a worm gear fixed on the lower end of the pounder shaft, a horizontal worm-screw carried by the cross-head and constantly in mesh with the worm gear; a star fixed on one end of the worm-screw, and a tooth carried by the crank pin and arranged to impart a partial rotation of the star each time the crank pin raises the pounder shaft to its highest position.

2. In a clothes washing machine and suitably framed, a power-driven horizontal shaft having at one end a crank, a yoke guided to move up and down and having a horizontal slot engaged by the crank; a vertically disposed pounder shaft having its lower end journaled to the yoke and provided with a fixed worm-gear; a worm-screw mounted on the yoke and in mesh with the worm-gear, a star-wheel fixed on the worm-screw, and means carried by the crank for engaging the star and giving it a partial rotation each time the yoke is raised to its upper position.

In testimony whereof I affix my signature.

ANDREW B. MILLER.