Oct. 26, 1954 E. H. LAND ET AL 2,692,675

PHOTOGRAPHIC ACCESSORY

Filed Aug. 5, 1952

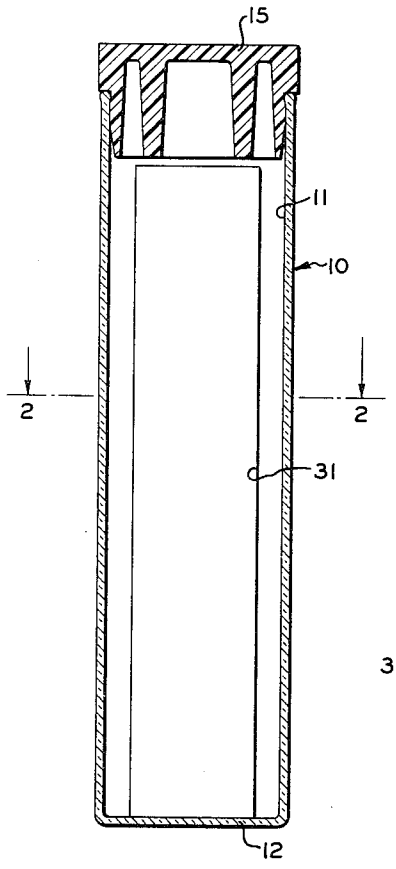

FIG. 1

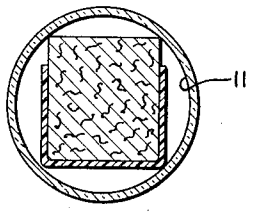

FIG. 2

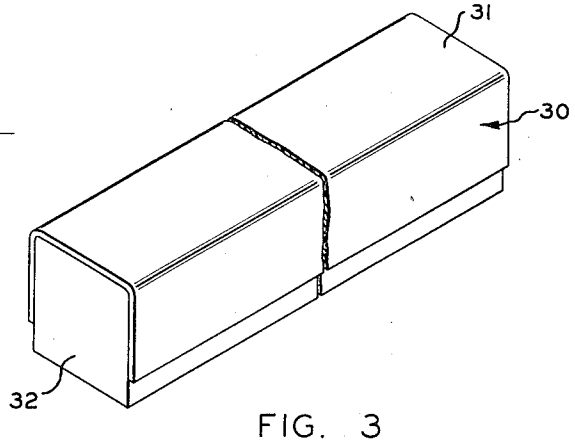

FIG. 3

INVENTORS
Edwin H. Land
and
Robert C. Casselman
BY Brown and Mikulka
and
Moncure B. Berg
ATTORNEYS

Patented Oct. 26, 1954

2,692,675

UNITED STATES PATENT OFFICE

2,692,675

PHOTOGRAPHIC ACCESSORY

Edwin H. Land, Cambridge, and Robert C. Casselman, Auburndale, Mass., assignors to Polaroid Corporation, Cambridge, Mass., a corporation of Delaware

Application August 5, 1952, Serial No. 302,742

3 Claims. (Cl. 206—46)

1

This invention relates to a photographic accessory useful for storing and applying a liquid coating composition to a finished photographic print for the purpose of improving the stabilization of the print and/or protecting the print from hazards encountered in storage and display, such as dirt or dust, fingerprints, scratches, the reaction with the print of chemicals carried in the atmosphere, and the like.

Objects of the invention are to provide a photographic accessory having, in combination, a hermetically sealable container, an applicator device removably mounted within the container and including liquid-absorbent means adapted to be rubbed in frictional contact with the surface of a photographic print for applying a coating to the print surface, and a liquid print-coating composition which is absorbedly carried by the absorbent means of the applicator device and which is of a nature such as will deteriorate when kept in a vessel open to the atmosphere; to provide, in an accessory of the character set forth, a hermetically sealable container constructed of a material which is substantially impermeable to oxygen and to water or vapor and designed to removably contain an elongated applicator device comprising a channel member manually holdable for operation of the device and having an absorbent element engaged and retained between the legs of the channel member and wherein said absorbent element is charged or impregnated with a quantity of a liquid coating composition of the nature described and in sufficient volume to coat a plurality of photographic prints; and to provide an accessory such as that described wherein the container and the applicator device are designed and constructed to cooperate with each other so that the applicator device is retained in the container in a special manner when mounted therein.

Other objects of the invention will in part be obvious and will in part appear hereinafter.

The invention accordingly comprises the product possessing the features,, properties and the relation of components which are exemplified in the following detailed disclosure, and the scope of the application of which will be indicated in the claims.

For a fuller understanding of the nature and objects of the invention, reference should be had to the following detailed description taken in connection with the accompanying drawing wherein:

Figure 1 is a longitudinal elevation of a preferred embodiment of a photographic accessory with which this invention is concerned and illustrates the container of the accessory in section with the applicator device in full elevation and mounted within the container;

2

Fig. 2 is a transverse, sectional view taken on the line 2—2 of Fig. 1; and

Fig. 3 is a diagrammatic view of the applicator device of Fig. 1.

As previously intimated, the print-coating composition that is to be used with the photographic accessory of this invention is of a nature which deteriorates when kept in the open and subjected to contact with the surrounding atmosphere. For example, the deterioration may be caused by oxidation of the composition or the drying out and/or hardening of the composition. It is, therefore, desirable to employ a hermetically sealable container constructed of oxygen- and water- or vapor-impermeable materials. For this purpose the container and a removable closure therefor may be formed of a sheet metal, such as aluminum, or of glass or an organic plastic or of any combination of such materials. Preferred materials are glass and/or a plastic. Also, for a purpose which will hereinafter appear in regard to the cooperative mounting of the applicator device within the container, the container should preferably have at least a portion which is provided with a rounded cross section.

Additionally, the container should be relatively long to receive an elongated applicator device. In this regard, the length of the container, including the stopper or the end wall provided by the container closure, should be just slightly longer than the applicator device while its transverse dimensions should be also slightly larger than those of the applicator device whereby the applicator device is retainable within the container with but slight end and side play between the container walls, including the closure therefor.

A container 10 of a character which meets these requirements is disclosed in Fig. 1 as comprising a cylindrical glass vial 11, closed at one end by an end wall 12 and at the other end by a removable stopper or closure 15 of any suitable design and formed preferably of an organic plastic such as polystyrene.

An applicator device 30 of a preferred construction is shown in Fig. 3. The applicator device 30 comprises a holder in the form of a channel member 31 and has an absorbent element 32 retainably engaged between the legs of the channel member. Channel member 31 may be formed of any suitable sheet material, such as metal or preferably from a sheet of organic plastic. A specific example of a preferred material for the

channel member 31 is polystyrene. When made of a plastic material, the channel member 31 may be formed by extrusion practices, or it may be formed from sheet stock. If polystyrene is used, it is preferably employed in a stretched and oriented condition whereby it is rendered readily workable. Channel member 31 may be shaped from sheet stock of suitable width by drawing the same in a heated condition through an appropriate forming guide and will retain its shape when cooled since the material employed is a thermoplastic material. A polystyrene sheet having a thickness of .010 inch is a satisfactory material for the channel member 31.

Absorbent element 32 may be of any appropriate material. It may be of cotton or wool and may be a woven cloth or felt or a batt of material. For example, the absorbent element 32 may be in the form of a dental cotton roll of the character used for absorbing saliva, or it may be formed by placing a plurality of cloth strips in face-to-face contact with each other. It will thus be observed that the absorbent element 32 may comprise an individual piece of material as, for example, a cotton roll or batt, or it may comprise a plurality of individual members as the cloth strips in face-to-face contact. The term "absorbent element" as used herein is, therefore, intended to be inclusive of either of the types of construction just described.

In length, absorbent element 32 is substantially equal to the length of the channel member 31 so that it may be symmetrically located within the channel member. On the other hand, the absorbent element 32 has a transverse dimension in a direction generally parallel to the legs of the channel member 31 which is greater than the width of the legs whereby a portion of the absorbent element 32 extends beyond the legs of the channel member 31. This extending part of the absorbent element 32 provides a working portion for the applicator device and is adapted to be contacted with the surface of the print to be coated.

As already pointed out, the applicator device should be of a relatively elongated character and should be dimensioned so that it is retainable within the container 10 with little end and side play. As a further dimensional requirement, the applicator device 30 should have a mass of absorbent material which is capable of holding a volume of a print-coating composition sufficient to coat a plurality of prints.

The applicator device 30 is adapted to be employed by rubbing the device, including the working portion of the absorbent element 32, over the surface of a print to be coated and in frictional or pressure contact therewith. Use of an applicator device which is relatively long permits the absorbent element 32 to be moved over the surface of the print with an even distribution of pressure. At the same time, the increased area of the working portion of the absorbent element provided by the use of a relatively elongated device permits application of the coating with a low unit pressure. Both an even distribution of pressure and a low unit pressure facilitate spreading the liquid coating composition and are highly desirable as they lead to even application of the composition to the surface without obtaining streaks or ridges or low spots in the applied coating.

Another advantage arising from the use of an elongated device 30 is derived from the fact that the device is designed to be held between the fingertips for carrying out a coating operation and is therefore subject to a higher degree of pressure and directional control than if held by a less sensitive portion of the hand. Also, by the use of a channel member, contact of the fingers with the liquid composition carried by the absorbent element 32 is avoided.

A further feature of importance in connection with the use of a channel member supporting an absorbent element resides in the fact that this construction has a transverse cross section which is generally rectangular. When the applicator device 30 is inserted within the container 10, there is limited contact of the applicator device with the walls of the vial 11, and such contact as may occur is restricted to a small area that extends lengthwise of the applicator device. Thus, the opportunity for the charged applicator to distribute its liquid content on the walls of the vial 11 is of a limited and restricted nature.

It has been noted that the size of the applicator device 30, including the mass of the absorbent element 32, is proportioned so that the device can contain a sufficient amount of liquid composition to coat a plurality of photographic prints. In this regard, the absorbent element 32 employed with the applicator device should be of a size capable of retaining the desired quantity of liquid without the composition dripping from the absorbent element 32. In length, the applicator device is proportioned to print size and in general should have a length which is less than the width of the print to be coated. Additionally, an applicator device having a length about that of a normal-length cigarette may be noted as a general-purpose size. In the so-called general-purpose applicator device, a channel member having legs of from about five-sixteenths inch to one-half inch in width and an absorbent element 32 having a working portion which extends beyond the free ends of the legs of the channel member 31 one-eighth inch, more or less, is satisfactory. The dimension of the applicator device transversely of the base of the channel member 31 will, of course, be a function of the volume of liquid composition to be carried by the absorbent element 32.

The print-coating composition with which the absorbent element of the applicator device is charged or impregnated may comprise a solution or a suspension of a wax or an organic plastic. While the present invention is generally unconcerned with the material of the coating composition, it may be noted that the composition, after being coated upon the surface of a print, will, upon drying, provide a relatively hard and transparent film on the surface of a print for the purpose of protecting this surface. One suitable composition, which is useful for improving the stabilization of a print and for forming a hard protective film on the surface thereof, comprises an aqueous suspension of a polymer of vinyl acetate. The expression "a polymer of vinyl acetate" is intended to include copolymers and terpolymers thereof.

A vinyl acetate polymer of this nature is available in the form of an aqueous suspension under the trade name of "Darex Polymer Y." A specific example of a suitable coating composition in the form of a suspension makes use of 29 grams of vinyl acetate polymer and 71 grams of water. If desired, a small quantity of wetting agent may be added to the just-mentioned composition. This composition when dry will provide a relatively hard, transparent coating of high gloss on the surface of a photographic print, as well as a coating which is substantially water insoluble and

hence substantially oxygen- and water- or vapor-impermeable. By one practice, the liquid coating composition is imbibed into the absorbent element 32 as, for example, by suitably immersing the element 32 in a bath of the composition, after which the impregnated element 32 is mounted within the channel member 31.

In use, the charged applicator is withdrawn from its container, and the holder thereof is grasped in the fingers of one hand. The other hand is used to hold the print to be coated upon a flat surface, and the applicator is rubbed lightly over the surface of the print whereby to coat it. The frictional contact of the absorbent element 32 with the surface of the print causes liquid coating composition to be discharged from the absorbent element 32 onto the surface of the print. By one procedure, application of the coating composition is carried out by use of a rotary motion until the print is thoroughly covered by the composition. Following this, two or more light, straight strokes are made across the print to even or smooth out the coating. Upon completion of the coating operation, the applicator device 30 is returned to the container 10, and the stopper or closure 15 for the container is placed in its closed position.

Since certain changes may be made in the above product without departing from the scope of the invention herein involved, it is intended that all matter contained in the above description or shown in the accompanying drawing shall be interpreted as illustrative and not in a limiting sense.

What is claimed is:

1. In a photographic accessory for use in coating a photographic print, in combination, a hermetically sealed container, an applicator device removably mounted within said container and including liquid-absorbent means adapted to be rubbed in frictional contact with a surface of a photographic print for applying a coating to said surface, and a liquid print-coating composition which is absorbedly carried by said absorbent means and which deteriorates when kept in a vessel open to the atmosphere, said container being provided with a removable closure for gaining access to the interior thereof to permit said applicator device to be stored therein and removed therefrom, said closure and the walls of said container being substantially impermeable to water and vapor, said applicator device comprising a channel member, an absorbent element engaged and retained between the legs of said channel member and extending substantially from end to end thereof, said absorbent element having a working portion which is coextensive with the length thereof, which extends beyond the legs of the channel member and which is contactable with the surface of a print for discharging liquid absorbed into said element onto said surface upon rubbing said working portion over said print, said channel member providing means for manually holding said applicator device without finger contact with said absorbent element while handling said applicator device, said print-coating composition being impregnated into said absorbent member in a volume sufficient to coat a plurality of prints.

2. A photographic accessory as defined in claim 1 wherein said container and said applicator device are relatively long and have longitudinal and transverse dimensions proportioned so that the applicator device is freely mounted in said container with limited end and transverse play between the applicator device and the container wall, including the closure for the container.

3. In a photographic accessory for use in coating a photographic print, in combination, a hermetically sealed container having a rounded cross section, an applicator device having a generally rectangular cross section removably mountable within said container and including liquid-absorbent means adapted to be rubbed in frictional contact with a surface of a photographic print for applying a coating to said surface, and a liquid print-coating composition which is absorbedly carried by said absorbent means and which deteriorates when kept in a vessel open to the atmosphere, said container being provided with a removable closure for gaining access to the interior thereof to permit said applicator device to be stored therein and removed therefrom, said closure and the walls of said container being substantially impermeable to water and vapor, said applicator device comprising an elongated channel member, an absorbent element engaged and retained between the legs of said channel member and extending substantially from end to end thereof, said absorbent element having a working portion which is coextensive with the length thereof, which extends beyond the legs of the channel member and which is contactable with the surface of a print for discharging liquid absorbed into said element onto said surface upon rubbing said working portion over said print, said channel member providing means for manually holding said applicator device without finger contact with said absorbent element while handling said applicator device, said print-coating composition being impregnated into said absorbent member in a volume sufficient to coat a plurality of prints, said container and said applicator device being dimensioned so that the applicator device is freely mountable in said container with limited end and transverse play between the applicator device and the container wall, including the closure of the container, the rounded cross section of the container and the generally rectangular cross section of the applicator device cooperating to restrict contact of said applicator device with the container wall to a limited portion of said applicator device comprising the corners thereof.

References Cited in the file of this patent

UNITED STATES PATENTS

Number	Name	Date
700,976	Olin	May 27, 1902
791,128	Bauer	May 30, 1905
1,488,961	Walbridge	Apr. 1, 1924
1,646,395	Field	Oct. 25, 1927