March 27, 1956 P. P. GRAY 2,739,785

TRANSPORTABLE RAISING AND LOWERING DEVICE

Filed Aug. 7, 1951

Fig. 1.

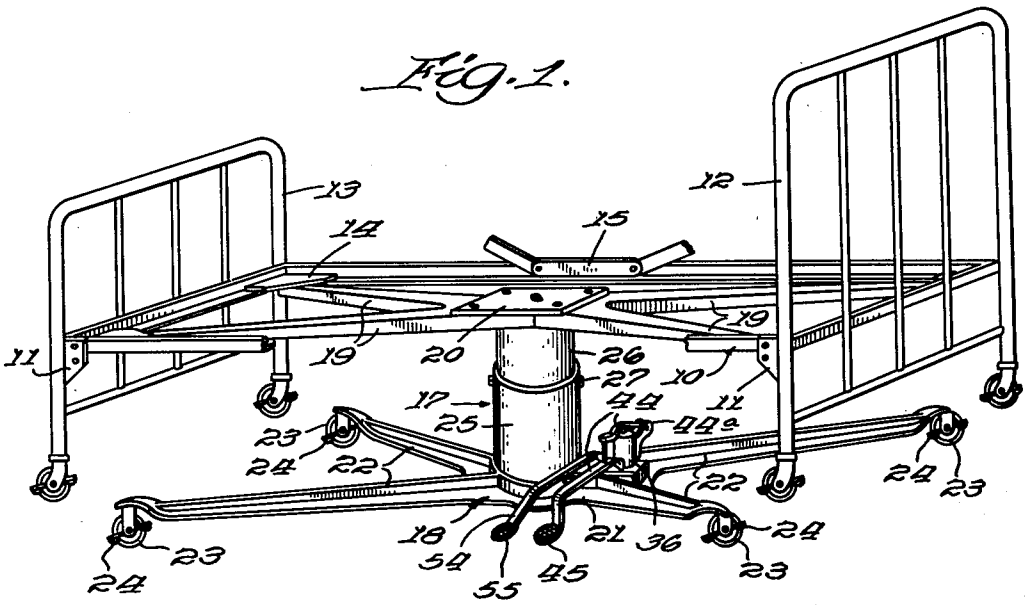

Fig. 2.

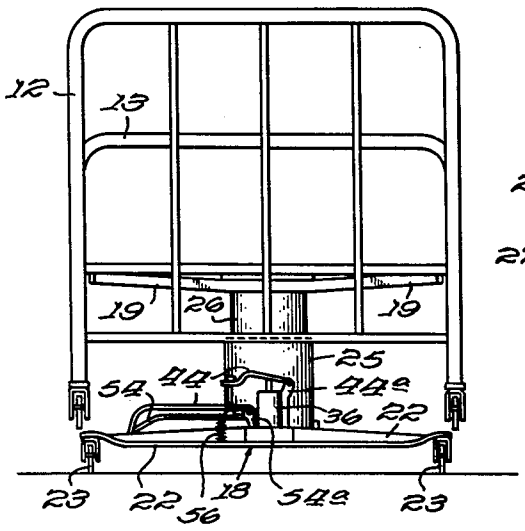

Fig. 3.

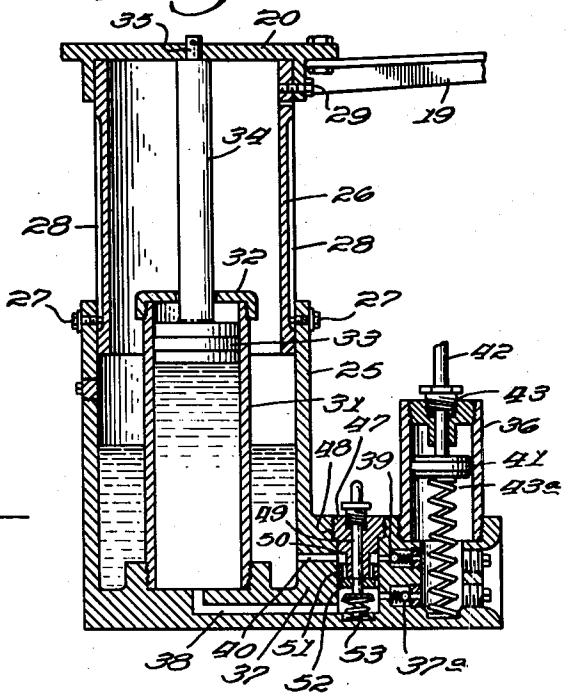

Fig. 4.

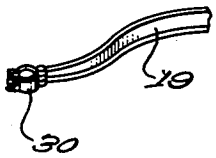

Inventor:
Pleasant P. Gray.
By George W. Wilson.
Atty.

United States Patent Office 2,739,785 Patented Mar. 27, 1956

2,739,785

TRANSPORTABLE RAISING AND LOWERING DEVICE

Pleasant P. Gray, Wilmington, Calif.

Application August 7, 1951, Serial No. 240,705

1 Claim. (Cl. 254—93)

My invention relates to a device for raising and lowering beds and particularly to such devices designed for use in hospitals so that the device may be readily moved from place to place as needed.

In hospitals some patients require a good deal of attention from the nurses, as for instance those that have recently undergone surgery. Such cases may be quite helpless for a few days and need to be moved into different positions at intervals for the changing of dressings, washing, prevention of damage from remaining too long in one position, and the like.

The nurses have therefore to do heavy lifting if the patient is placed in the usual bed of standard height and it is usual to use a higher bed in order to lessen the strain on the nurses. The patient is moved to a bed of standard height when he does not need constant attention and can look after himself to some extent.

It is undesirable, however, to leave a patient on a high bed if delirious, recovering from anesthetic, or otherwise not in full possession of his faculties, since he may easily roll out of bed and be seriously hurt by breaking bones. It is therefore not unusual to fit high beds with side guard rails, which of course, entail additional expense of equipment and involve the nurses in extra work in positioning and removing the side rail when making up the bed and when performing other services for the patient.

The most suitable height of bed for patients liable to fall because of age, infirmity or weakness when trying to get out of bed is such that the patient may rest his weight firmly on his feet when he places them on the floor while still sitting on the bed.

For this reason the height of the legs of such a bed should be shorter than for a standard bed. The height of the usual adjustable spring mattress, plus mattress and height of the lowered bed frame above the floor should be somewhat less than the distance from the back of the knee to sole of the foot of an average patient when sitting on the edge of the bed with their feet on the floor, which is several inches lower than the standard bed. To bring the bed to a comfortable height for a nurse to attend to the patient when lying in the bed requires that the bed frame should therefore be raised several inches, and it is the general object of my invention to provide a device by the use of which beds may be raised from a height comfortable and safe for a patient who may wish to get up from the bed from time to time, to a level convenient for a nurse giving service to the patient, the bed after such service being again lowered to its normal position.

In order to avoid the expense of keeping specially constructed beds which may be raised and lowered it is the particular object of my invention to provide a device which may be used with any hospital bed of usual construction, though of low height, to enable such a bed to be raised to a convenient height while attending to the patient and then may be lowered to its normal height,

and the device then moved to another bed for use in the same way.

It is a further object of my invention to provide a device of the kind described which is simple and efficient in operation and low in cost of operation and maintenance, thus reducing the cost of ward equipment while improving service to hospital patients.

Still further objects and features of my invention will hereinafter appear from the following description and accompanying drawings which illustrate an embodiment of my invention at present considered preferable by me.

In the drawings:

Figure 1 is a perspective view of a hospital bed frame with head and foot in raised position by the hydraulic device of my invention, and with the spring mattress frame and mattress removed;

Figure 2 is an end elevation of the bed frame and parts shown in Figure 1 looking from the left in Figure 1;

Figure 3 is a cross section on the line 3—3 of Figure 2 drawn on an enlarged scale; and,

Figure 4 is a fragmentary detail showing a modified arrangement of the connection of lifting arms to the bed.

In Figure 1 the numeral **10** indicates the frame of a hospital bed which is secured by joints **11** to a head **12** and a foot **13**.

The frame **10** is of angle or channel section formed as a rectangle braced at the corners by small plates **14**. It will be understood that a frame consisting of jointed sections and containing the spring mattress, as well as the mattress laid on the spring mattress, are supported on the frame **10** but have been omitted from the drawing except that the center section of the spring frame is indicated at **15**, since those parts are not concerned in my invention.

The device of my invention is operable to raise and lower the bed frame, and comprises a hydraulic unit **17** mounted on a wheeled base **18** and detachably engaging the frame of the bed by arms **19** mounted on a head **20** and fitting under the corner plates **14** and securely positioned thereby.

The hydraulic unit **17** is shown in section in Figure 3, and comprises a base plate **21** having arms **22** extended therefrom toward the legs of the bed and carried on swiveling wheels **23** fitted with the usual toe operated locks **24**. The wide spread of arms **22** assures a steady support for the hydraulic unit mounted on the base.

A guide cylinder **25** of considerable diameter is formed as part of the hydraulic unit casting which is rigidly secured to the base. A cylindrical guide member **26** is telescopically fitted in guide cylinder **25** and held against turning therein by pins **27** extending through the wall of cylinder **25** and projecting into vertical grooves **28** in the outer face of member **26**.

Head **20** is mounted on the upper end of guide member **26** and secured against turning thereon by studs **29**. Arms **19** may be secured in any suitable manner to head **20** or cast integral therewith.

It will be understood that while arms **19** are shown as engaging under the frame at its corners, they may engage therewith at any other suitable point, or if preferred, may engage with the legs of the bed below the joints **11** by suitably shaping the arms and fitting readily released clamps **30** at the ends thereof as indicated in Figure 4.

A hydraulic cylinder **31** is mounted centrally of the guide cylinder **25**, the upper end of cylinder **31** being fitted with a centrally bored cap **32** which merely serves to limit the upward movement of a piston **33** working in cylinder **31**. A piston rod **34** is secured at its lower end to piston **33**, and is secured at its upper end in head **20** in any suitable manner as indicated at **35**.

A pump barrel 36 is mounted on a valve block 37 integral with the hydraulic unit casting, the pump barrel communicating with the interior of cylinder 31 through outlet check valve 37*a* and passage 38. The pump barrel also communicates with the interior of the guide cylinder 25 through inlet check valve 39 and passage 40.

A piston 41 is arranged in the pump barrel, a piston rod 42 secured to the piston passing through a guide and packing gland 43 and projecting above the top of member 43.

A coil spring 43*a* arranged between the piston and the base of the pump cylinder urges the piston in upward direction. The piston is forced downwardly by a compound lever 44 pivoted at one end in a bracket 44*a* fitted with a foot pedal 45 projecting into position to be conveniently operated by an upward and downward movement of an attendant's foot. A supply of hydraulic fluid is maintained in the lower portion of the guide cylinder 25 which serves as a reservoir. The piston 33 is shown in raised position in Figure 3.

The pressure under the piston 33 may be released to lower the bed by means of a valve 46 comprising a valve body 47 screwed into a vertical bore 48 intersecting the inlet and outlet passages 40 and 38 respectively. The valve body is axially drilled to receive a plunger 49 and is provided with a peripheral passage 50 in its surface which is aligned with inlet passage 38 and allows hydraulic fluid to flow from the hydraulic reservoir into the pump cylinder on the upstroke of piston 41. The portion of the valve body below passage 50 is provided with a passage for hydraulic fluid to be released from under piston 33, for instance by drilling passages 51 in the lower portion of the valve body which extend from the lower surface thereof to the peripheral passage 50. The plunger 49 is fitted at its lower end with a disc 52 which is urged against the bottom of the valve body to close the lower ends of passages 51 by a spring 53 positioned between the under side of the disc 52 and the base of the casting.

The stem may be depressed to open the passages 51 for the return of hydraulic fluid into the reservoir by depressing a lever 54 pivoted at one end in a bracket 54*a* secured to the top of the valve block and bearing on the upper end of the plunger 49. The lever terminates in a pedal 55 arranged in proximity to pedal 45 of the pump operating lever. A coil spring 56 arranged under compression between the lever 54 and the base 18 of the hydraulic unit normally holds the lever 54 in raised position.

The use of the bed raising device of my invention provides many advantages for use particularly with hospital beds. The only change in the beds themselves is that the bed frames are preferably mounted on the legs of the head and foot of the bed several inches lower than usual so that a patient wishing to get out of bed and sitting on the edge of the bed can rest their weight on their feet on the floor without having to raise themselves on the bed and somewhat straighten their legs as they now have to do. The position of the patient is therefore comparable to a

person sitting in a chair of comfortable height who wishes to get up. For such a person it is only necessary to lean forward to place their full weight on their feet and thus avoids any danger of sliding off the edge of the usual hospital bed, especially those that are rather high as used for cases requiring much attention, since a low bed involves much additional effort on the part of the nurse. Various changes may be made in the described embodiment of my invention within the scope of the appended claim.

I claim:

A transportable and detachable raising and lowering device for a hospital bed, said device comprising: a base member adapted to be positioned centrally beneath the bed frame; rigid arms extending diagonally from said base to substantially the positions of the legs of the bed, leaving the floor around the margin of, and under, the bed frame free of obstruction; lockable antifriction means mounted at the ends of said arms and resting on the floor to ensure the stability of said bed and to afford free access to serve the bed from all sides; a first large diameter vertical cylinder mounted centrally and vertically on said base; a second cylinder mounted telescopically with, and guided for movement on, said first cylinder; a head rigidly mounted on said second cylinder; a hydraulic cylinder of less diameter than said cylinders and mounted on said base within said cylinders; arms rigidly secured to and extending from said head toward the corners of the bed frame and adapted to detachably but securely engage therewith out of contact with the bed mattress and its associated adjusting means; a pump mounted on said base; a supply of hydraulic fluid maintained in the base of the first cylinder; pipes connecting the supply of hydraulic fluid for flow to and from the pump and from the pump to and from the hydraulic cylinder; a piston within said hydraulic cylinder; a piston rod secured to the piston at one end and to the head at its other end, said piston being raised by liquid under pressure forced into the hydraulic cylinder under the piston by said pump, the piston being lowered by the weight carried by said head; lever operated means to operate said pump; valve means automatically controlling the flow of fluid to and from the pump when raising the piston; and means for controlling said valve means to enable fluid to flow from under the piston to said hydraulic fluid supply during the lowering movement of the piston.

References Cited in the file of this patent

UNITED STATES PATENTS

538,465	Peyton	Apr. 30, 1895
1,430,675	Orell	Oct. 3, 1922
1,804,299	Yentsch	Mar. 5, 1931
1,981,271	Koenigkramer et al.	Nov. 20, 1934
2,050,000	Frost	Aug. 4, 1936
2,604,640	Junkin	July 29, 1952

FOREIGN PATENTS

110,024	Great Britain	Oct. 5, 1917