C. E. CORKRAN.

NON-SKID DEVICE.

APPLICATION FILED MAR. 13, 1917.

1,258,318.

Patented Mar. 5, 1918.

2 SHEETS—SHEET 1.

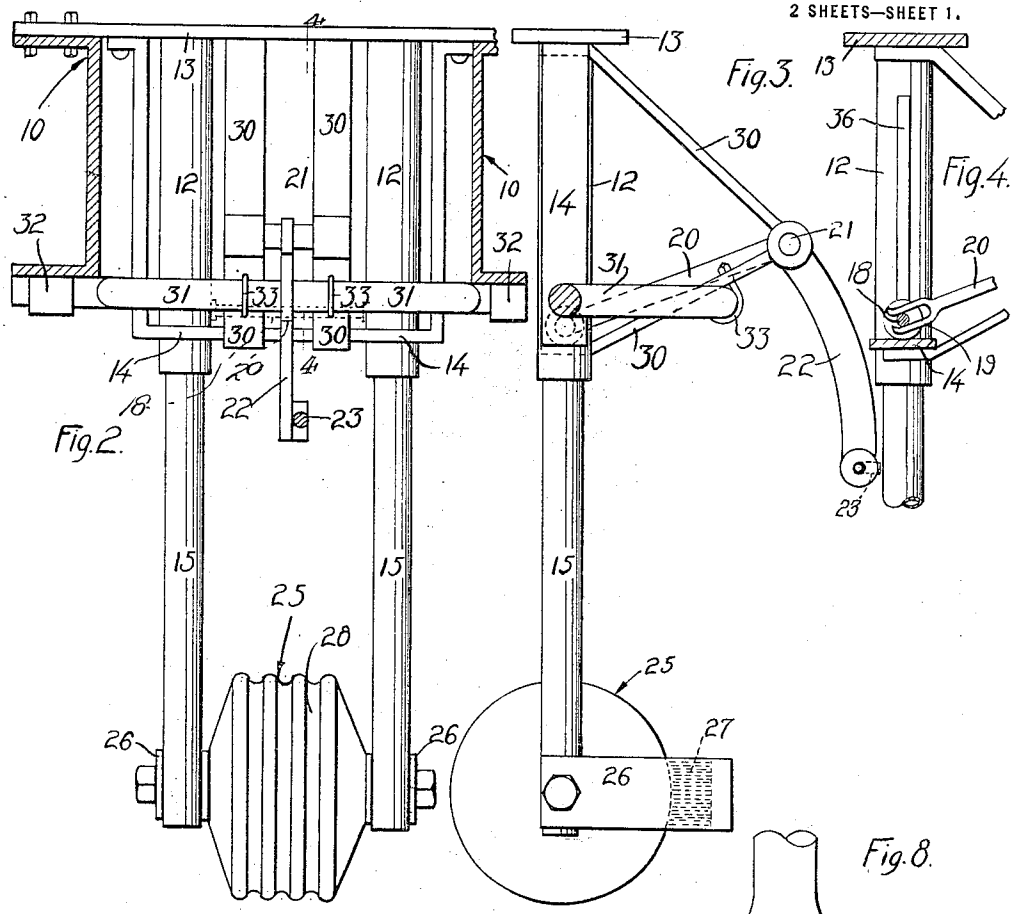

Fig. 2.

Fig. 3.

Fig. 4.

Fig. 1.

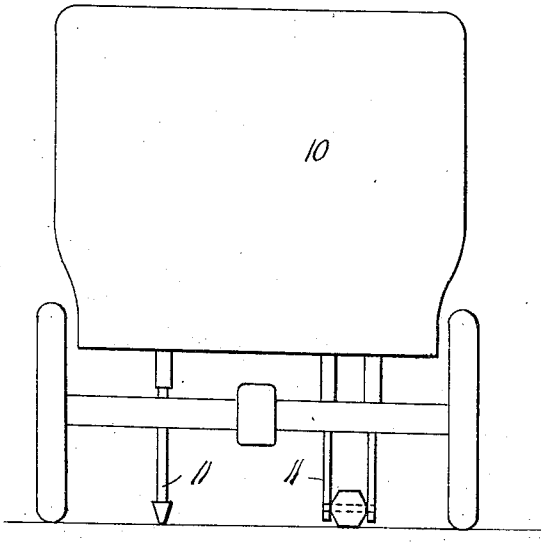

Fig. 8.

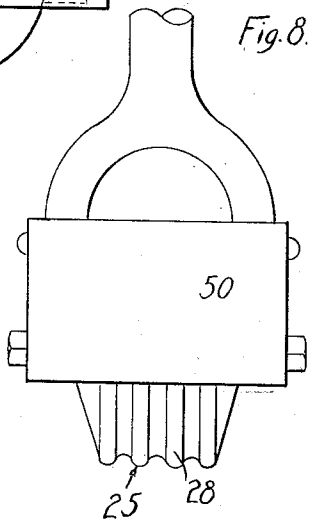

Inventor

Chas. E. Corkran

by James L. Bowles

his Attorney

SACKETT & WILHELMS CO. N.Y.

C. E. CORKRAN.

NON-SKID DEVICE.

APPLICATION FILED MAR. 13, 1917.

1,258,318.

Patented Mar. 5, 1918.

2 SHEETS—SHEET 2.

Fig. 5.

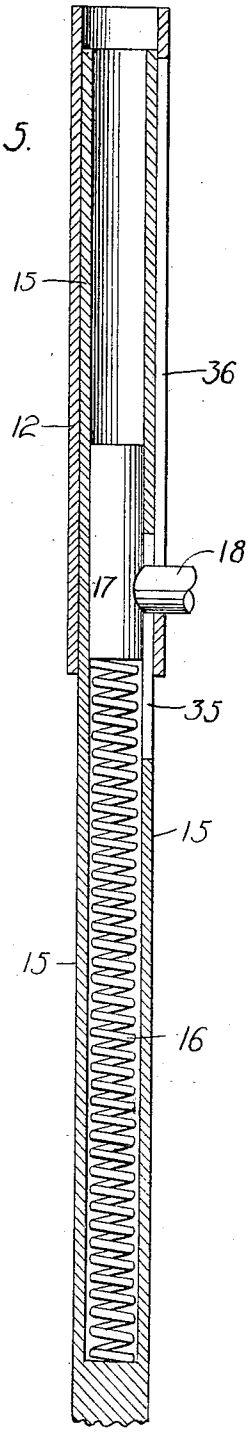

Fig. 7.

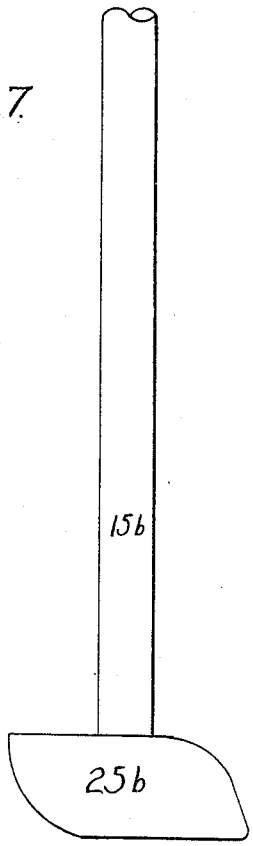

Fig. 6.

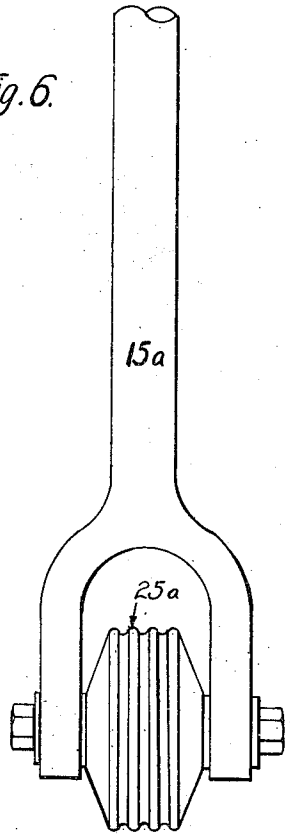

Fig. 9.

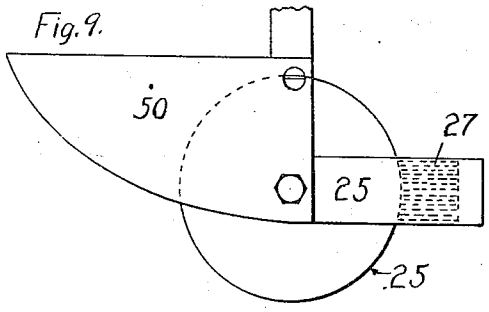

Inventor

Chas. E. Corkran

by James T. Barkley

his Attorney

UNITED STATES PATENT OFFICE.

CHARLES E. CORKRAN, OF LOS ANGELES, CALIFORNIA.

NON-SKID DEVICE.

1,258,318. Specification of Letters Patent. Patented Mar. 5, 1918.

Application filed March 13, 1917. Serial No. 154,449.

To all whom it may concern:

Be it known that I, CHARLES E. CORKRAN, a citizen of the United States, residing at Los Angeles, in the county of Los Angeles, State of California, have invented new and useful Improvements in Non-Skid Devices, of which the following is a specification.

This invention relates to non-skid devices for vehicles, particularly for motor vehicles and the like; and it is an object of this invention to provide a simple and inexpensive means which may be easily attached to any motor vehicle, and which will effectually prevent skidding.

I explain a preferred form of mechanism embodying my invention in the following specification, but it will be understood that my device may be varied in its design and construction, in order to suit different situations and in order to be adapted to operation by different kinds of motive power, different operative connections, etc. My device comprises a combination of a road engaging member of such design as to engage the road to prevent skidding; and a manually operable or controllable means to move said member into and out of engagement with the road. Preferably I utilize a resilient element, so that the road engaging member is resiliently held against the road surface; and I prefer to adapt a general style of construction which embodies one or more vertical cylinders with vertical plungers extending downwardly therefrom and carrying the road engaging member at their lower ends. These details, and other specific details of construction, are all explained in the following specification, reference being had to the accompanying drawings in which Figure 1 is a rear view of an automobile equipped with my device, showing two different forms which may be used on different kinds of roads; Fig. 2 is an enlarged end elevation of the device; Fig. 3 is a side elevation of the same; Fig. 4 is a partial section taken as indicated by line 4—4 on Fig. 2; Fig. 5 is an enlarged longitudinal section showing the construction of a cylinder and plunger; Fig. 6 is an enlarged view showing a road engaging wheel or roller carried upon the lower end of a single plunger; Fig. 7 is a view showing a road engaging skid carried upon the lower end of the single plunger; Fig. 8 is a front elevation showing an attachment to the wheel carrying frame; and Fig. 9 is a side elevation of the same.

In the drawings the numeral 10 designates the frame and body of an automobile, and the numeral 11 designates my non-skid device, shown in its general relative proper position in Fig. 1. In one preferred form as shown in Figs. 1 to 5, my device may comprise a pair of cylinders 12, whose upper ends are mounted in a suitable horizontal frame member 13, and whose lower ends are mounted in another suitable frame member 14. This frame member 14 may be of the configuration shown, extending up and joining with the frame member 13, as illustrated.

The cylinders 12 are thus carried rigidly in proper vertical position. In each of the cylinders 12 I place a plunger 15 extending down below the lower end of the cylinder. These plungers 15 are preferably hollow and carry springs 16, as is shown in detail in Fig. 5. Above the spring there is a plunger block 17; and each plunger block is connected to a cross pin 18. Cross pin 18 is engaged by the forked end 19 of lever arm 20 which forms one part of a bell crank lever pivoted on the shaft 21, the other arm 22 of the bell crank lever extending downwardly and connecting to any suitable operating rod. This operating rod 23 may be a special operating rod used for this purpose only, or it may be a brake operating rod. Forward motion on rod 23 (in a direction indicated by the arrow in Fig. 3) will cause downward motion of the plunger blocks 17, which will cause downward motion of the plungers 15 through the resilient medium of the springs 16. In the form now being explained, the two plungers 15 carry the road engaging wheel or roller 25 between their lower ends. The lower ends of these plungers are connected together by a suitable connecting cross frame 26; and this frame may carry a brush 27 adapted to press against the periphery of the wheel 25 to remove mud therefrom and to keep the wheel clean so that it may efficiently perform its office. The periphery of the wheel may be grooved, as shown at 28, in order to effectually engage the road surface in such a manner as to prevent lateral motion.

The shaft 21 is mounted in and between two frame members 30 which connect with frame member 13 above and frame member 14 below. In order to make the lower part of the frame sufficiently rigid, I may provide a member 31 whose ends are mounted

upon or connected with the frame 10 of the vehicle, as indicated at 32; and this member 31 may be connected to the frame members 30 by suitable clamps or straps 33. The whole stationary frame and the cylinders 12 are thus held in proper rigid position so as to hold the plungers 15 and the road engaging member in its proper position.

Normally, the road engaging members will be raised off the road by moving the lever arm 20 upwardly. The cross pin 18 passes through a short slot 35 in plunger 15, up through a long slot 36 in the cylinder 12.

Upward movement of the cross pin will cause it to engage the upper end of the slots 35 and then the cross pin may be moved upwardly in the slots 36, raising the road engaging member to its upper inoperative position. When it is desired to throw the device to operative position, the lever arm 20 is moved downwardly, pressing down upon the plunger blocks 17 and thus pressing down on the springs 16 to press the road engaging member resiliently into contact with the road.

It will be understood that any suitable source of power may be utilized to move the road engaging member into and out of operation. I herein show and explain a purely mechanical operation of the road engaging member, preferably operated by hand or foot; but this is not necessarily the case. It will be seen that other means may be applied to the plungers 15 to move them up and down. For instance, without changing the essentials of the inventions of the device, fluid or pneumatic pressure, or electrical energy might be used for this purpose.

I have also explained in preferred form, the use of a pair of cylinders and plungers to support the road engaging members. However, a road engaging member may be mounted directly upon the lower end of a single plunger. And, furthermore, this road engaging member is not necessarily in the form of a roller or wheel. In Fig. 6 I show the lower end of a plunger 15^a which carries a road engaging wheel or roller 25^a upon its lower end; and in Fig. 7 I show the lower end of a plunger 15^b which carries directly a skid 25^b. I may prefer to use a skid for unpaved roads; while I may prefer to use the roller or wheel for paved roads; and, as shown in Fig. 1, I may mount both forms on a machine and use the same as above explained, both devices being operated by separate means.

In Figs. 8, and 9 I show a member 50 attached to the lower end of the wheel and the skid holding frame, which has for its purpose the object of lifting the wheel over any rough road, which the wheel would not normally ride over. This member 50 is attached at the forward side of the frame in the position shown in Figs. 8 and 9 and enables the device to accomplish the above mentioned object. It may be attached to any of the above mentioned forms.

From the foregoing detailed description, the nature of my invention may be readily understood. I do not necessarily limit myself to the details herein set forth, as such details may be varied or modified without exceeding my invention as indicated by the following claims.

Having described a preferred form of my invention, I claim:

1. A non-skid device for vehicles, embodying a stationary frame mounted upon the vehicle and embodying a vertical cylinder having a slot therein, a plunger therein extending below the lower end of the cylinder, a road engaging member on the lower end of the plunger, said plunger being hollow, a compression spring resting in said plunger, a plunger block movable in the plunger, the plunger being slotted and there being a cross pin connected to the plunger block and projecting through the plunger slot and cylinder slot, and manually operable means connecting to said cross pin to move it up and down.

2. A non-skid device for vehicles, embodying a stationary frame mounted upon the vehicle and embodying a pair of vertical cylinders having slots therein, plungers therein extending below the lower end of the cylinders, a road engaging member on the lower end of the plungers, compression springs in said cylinders acting on the plungers, blocks movable in said cylinders acting on the springs, a cross pin extending between the blocks, and means to move the cross pin.

In witness that I claim the foregoing I have hereunto subscribed my name this 7th day of March, 1917.

CHAS. E. CORKRAN.

Copies of this patent may be obtained for five cents each, by addressing the "Commissioner of Patents, Washington, D. C."