US00D482271S

(12) United States Design Patent

Angeletta

(10) Patent No.: US D482,271 S
(45) Date of Patent: ** Nov. 18, 2003

(54) **SQUEEZABLE CONTAINER FOR LIQUID AND LOTION DISPENSING**

(76) Inventor: **Joseph G. Angeletta**, 418 Fifth St., Mamaroneck, NY (US) 10543

(**) Term: **14 Years**

(21) Appl. No.: **29/170,012**

(22) Filed: **Oct. 30, 2002**

Related U.S. Application Data

(62) Division of application No. 29/141,267, filed on May 2, 2001, now Pat. No. Des. 468,197.

(51) **LOC (7) Cl.** **09-01**
(52) **U.S. Cl.** **D9/338**
(58) **Field of Search** D9/337–338, 341, D9/347, 503–504, 529, 548–549, 562, 574, 434–436, 440, 477, 499; 206/205, 209–210, 216, 223, 568, 581, 229, 277, 438, 527; 220/4.01, 4.03, 4.26, 4.31, 23.83, 23.91, 500, 503, 505–506, 212, 288, 290

(56) **References Cited**

U.S. PATENT DOCUMENTS

D238,751 S	*	2/1976	MacGrossen	D9/1
D262,438 S	*	12/1981	Sears et al.	D9/338
D328,248 S	*	7/1992	Ruff	D9/418
D362,801 S	*	10/1995	Milroy	D9/347
D400,005 S	*	10/1998	Wolff	D3/203
D468,197 S	*	1/2003	Angeletta	D9/338

* cited by examiner

Primary Examiner—Ted Shooman
Assistant Examiner—Daniel Bui
(74) *Attorney, Agent, or Firm*—Scully, Scott, Murphy & Presser

(57) **CLAIM**

The ornamental design for a squeezable container for liquid and lotion dispensing, as shown and described.

DESCRIPTION

FIG. **1** illustrates a front view of a squeezable container for liquid and lotion dispensing showing my new and ornamental design;

FIG. **2** illustrates a bottom view thereof;

FIG. **3** illustrates a front view, partly in section, showing a cover portion attached thereto; and,

FIG. **4** illustrates a perspective exploded view showing all of the components thereof.

1 Claim, 2 Drawing Sheets

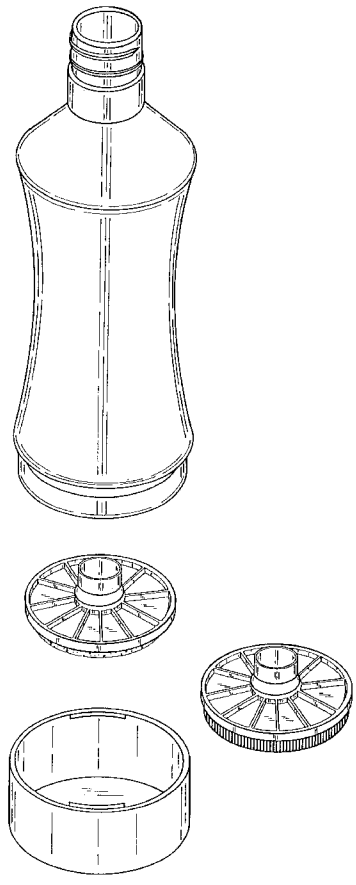

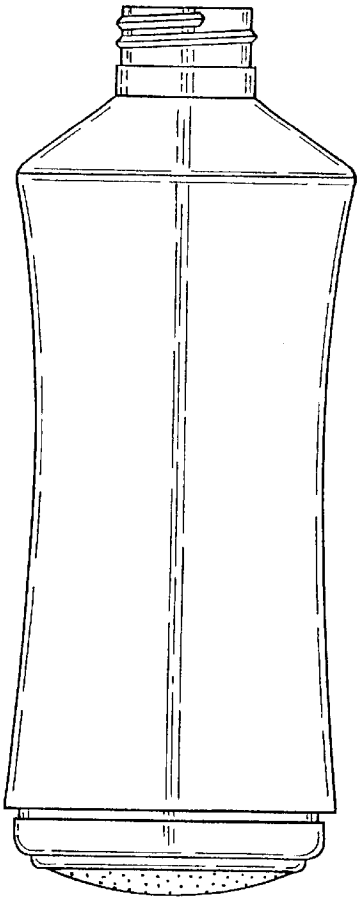

FIG. 1

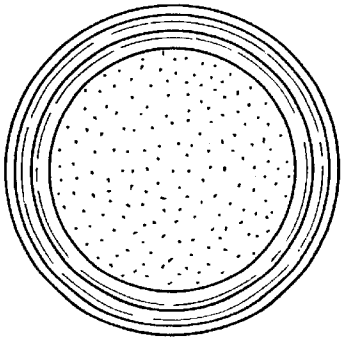

FIG. 2

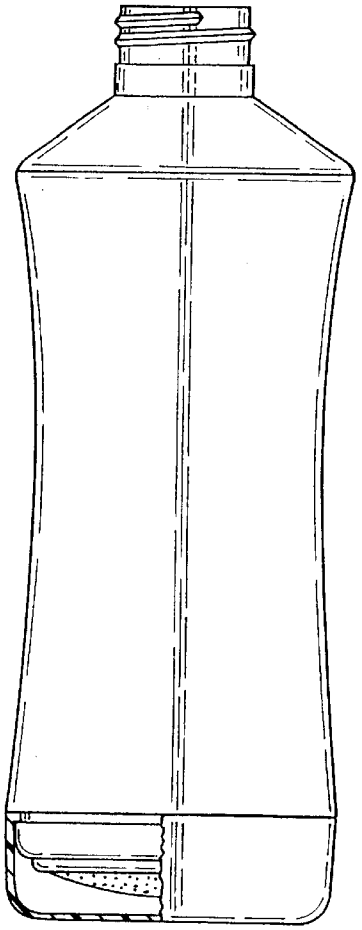

FIG. 3

FIG. 4

