W. SKIPWORTH.

PORTABLE BUILDING CONSTRUCTION.

APPLICATION FILED MAY 4, 1914.

1,170,691.

Patented Feb. 8, 1916.

2 SHEETS—SHEET 1.

Fig. 1.

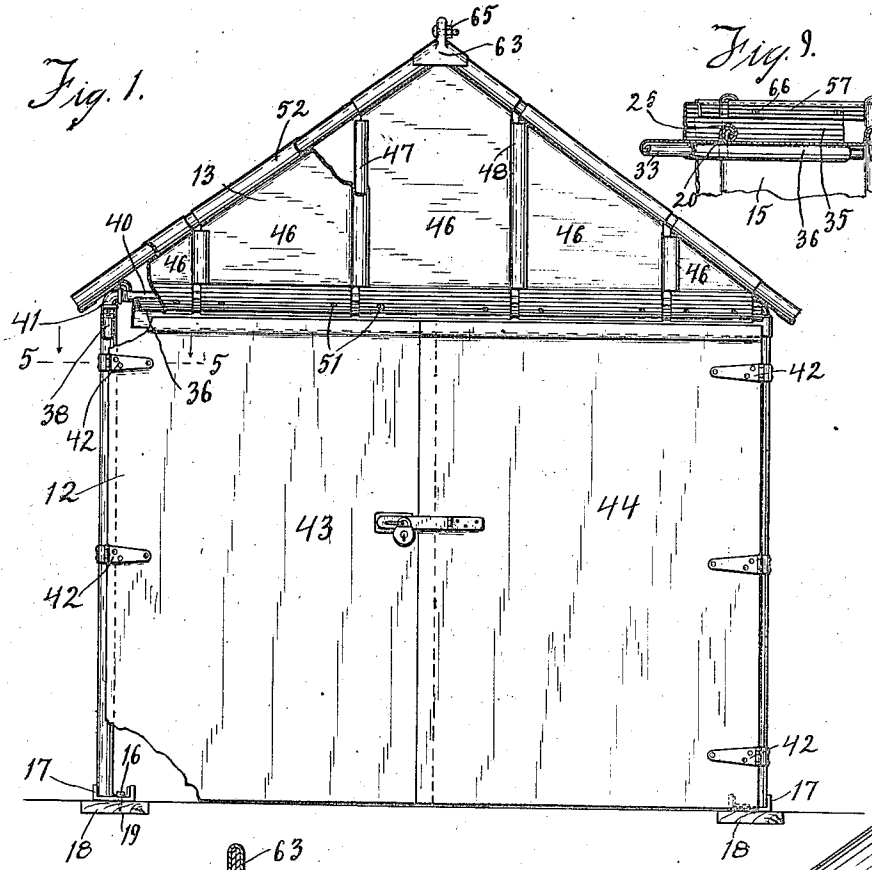

Fig. 9.

Fig. 3

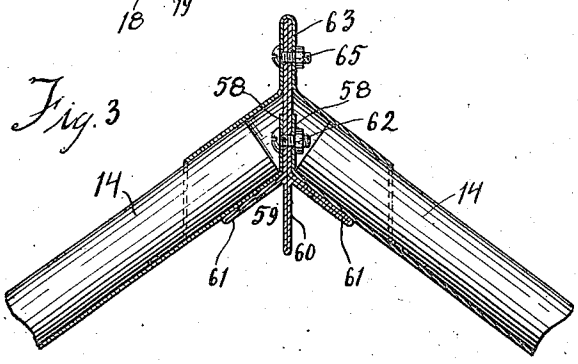

Fig. 4.

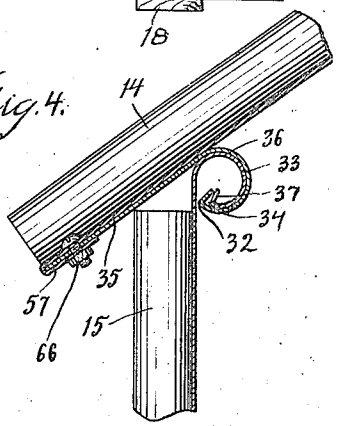

Fig. 5.

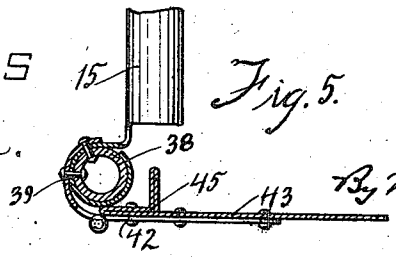

WITNESSES

C. F. Miller.

E. Schowalter.

INVENTOR.

Walter Skipworth

By Morsell, Keeney & French

ATTORNEYS.

W. SKIPWORTH.

PORTABLE BUILDING CONSTRUCTION.

APPLICATION FILED MAY 4, 1914.

1,170,691.

Patented Feb. 8, 1916.

2 SHEETS—SHEET 2.

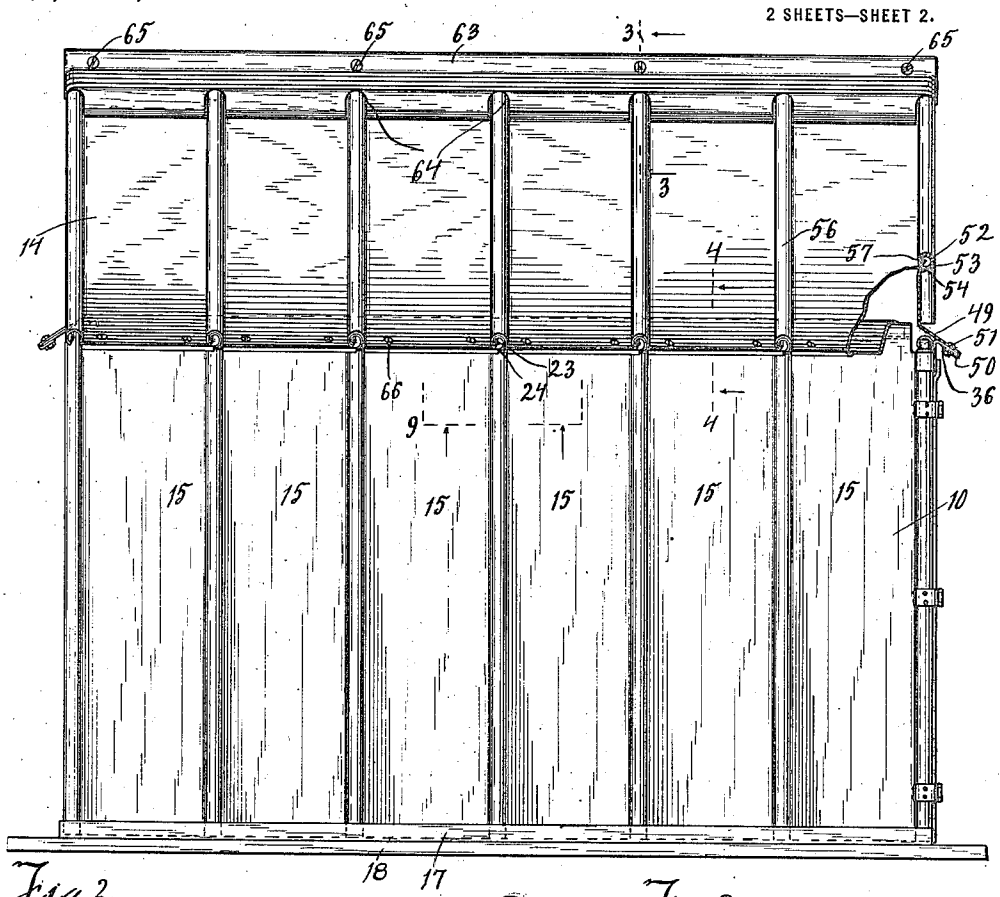

Fig. 2

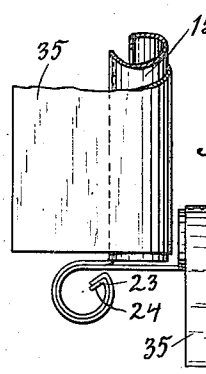

Fig. 6.

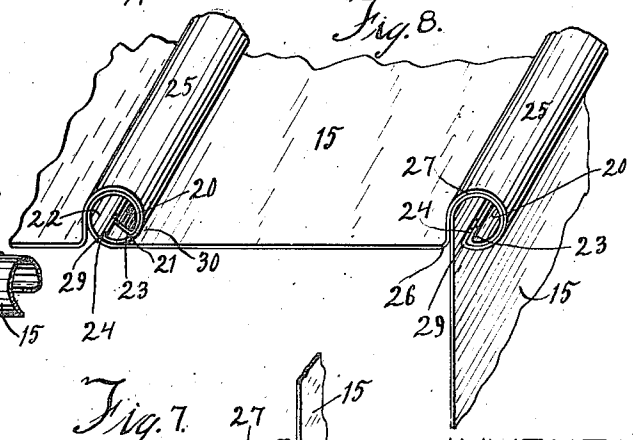

Fig. 8.

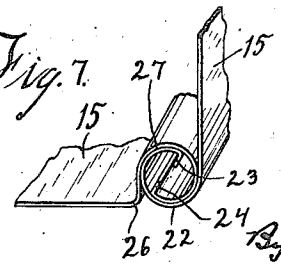

Fig. 7.

WITNESSES.

E. F. Miller.

Emily Schowalter.

INVENTOR.

Walter Skipworth.

By Morsell, Kenney & French

ATTORNEYS.

UNITED STATES PATENT OFFICE.

WALTER SKIPWORTH, OF RACINE, WISCONSIN, ASSIGNOR OF ONE-HALF TO CHARLES R. WELLS, OF RACINE, WISCONSIN.

PORTABLE BUILDING CONSTRUCTION.

1,170,691. Specification of Letters Patent. Patented Feb. 8, 1916.

Application filed May 4, 1914. Serial No. 836,095.

To all whom it may concern:

Be it known that I, WALTER SKIPWORTH, a citizen of the United States, and resident of Racine, in the county of Racine and State of Wisconsin, have invented new and useful Improvements in Portable Building Construction, of which the following is a description, reference being had to the accompanying drawings, which are a part of this specification.

The invention relates to building construction.

The invention designs to provide a portable building construction of sheet metal.

The invention further designs to provide a portable building construction in which the sides, gables and roofing are made up of a plurality of interlocking members detachably connected together.

The invention further designs to provide a new and improved portable building construction.

The invention consists in the several features hereinafter set forth and more particularly defined by claim at the conclusion hereof.

In the drawings Figure 1 is an end elevation of a building embodying the features of the invention. Fig. 2 is a side elevation thereof. Fig. 3 is a section taken on the line 3—3 of Fig. 2. Fig. 4 is a section taken on the line 4—4 of Fig. 2. Fig. 5 is a section taken on the line 5—5 of Fig. 1. Fig. 6 is a detail top view of one of the corners of the building with the top removed. Fig. 7 is a detail view of the joint or interlocking connection for the detachable plates showing the manner of attaching them. Fig. 8 is a detail view showing the members or plates secured together and a corner connection of the plates. Fig. 9 is a detail bottom view of the roofing.

The portable building consists of sides 10, a rear end constructed similar to the sides 10 and, therefore, not shown, front end 12, gables 13 and roofing 14.

The sides of the building are made up of a plurality of sheet metal plates 15 having end flanges 16, the plates resting upon and secured by these flanges 16 to suitable longitudinally extending angle irons 17 which may be secured to suitable sill members 18 by bolts 19 which extend through the flanges 16 and angle irons 17.

Each of the side plates 15 is rounded at one of its sides 20 to form a tubular portion 22 extending lengthwise of the plate. The edge of this side is bent upwardly into the tubular part 22 as shown at 21 in Fig. 8 to form a flange 23. The other side 25 of the plate 15 is bent at angle thereto as shown at 26 in Fig. 8 and is then rounded over to form a tubular portion 27 extending lengthwise of the plate. The edge of this side is bent upwardly into the tubular part 27 as at 29 in Fig. 8 to form a flange 24. To secure adjacent plates together one of the plates is positioned at an angle to the other as shown in Fig. 7. In this position the tubular part 22 of one side of one plate which is designed to register with the tubular part 27 of the other side of another plate is slid into position, the interior of the side 20 forming a bearing for the outer part of the tubular portion 27 of side 25 and interior of the side 25 forming a bearing for the outer part of the side 20. Under these conditions when the ends of the plates aline with each other, the plate which was positioned at an angle to the other is turned down so that it lies in the same plane as that of its adjacent plate as shown at 30 in Fig. 8. Under these conditions the edge of flange 23 of the side 20 of one plate will rest upon the side of flange 24 of the side 25 of the adjacent plate thus preventing further movement of the plates with respect to each other and efficiently locking them together.

In the manner above described successive plates are attached to each other to form the sides and rear end of the structure and the corners for the sides and end are similarly connected as shown at 31 in Fig. 8 but in this case flange 23 rests upon the flange 24.

When the sides and ends have been secured together they will be placed in upright position and secured to the base as previously pointed out.

The upper end of plates 15 for the side and rear ends has an extension 32 thereon, which is rounded over to form a tubular part 33 and whose edge is bent inwardly to form a flange 34 as shown in Fig. 4. The plates are detachably secured at their upper ends to frame members 35 having rounded tubular sides 36 extending lengthwise thereof and an inwardly extending flange 37. When the sides and ends are set up the members 35 may be slipped into position to hold the upper ends of the sides and end plates in

alinement, the tubular part 33 forming a bearing for the tubular side 36 and the flange 37 abutting the flanges 34 to lock the members 35 and the respective sides and ends in position. A front frame member 36 is secured to the side plate adjacent the front.

The front of the structure is reinforced by tubing 38 which fits within the tubular portion of the side plate adjacent the front of the structure and is connected thereto by suitable rivets 39 as shown in Fig. 5 which tubing is connected together by a horizontally extending tubing 40 as shown at 41 in Fig. 1. These rivets 39 also pass through one part of hinges 42 the other part of the hinge being riveted to the sheet metal door which is made of two parts 43 and 44 and is reinforced at its edge 45 adjacent the sides of the building. After the sides and ends have been placed in position the gables 13 and roofing 14 are set up. The gables 13 consists of a plurality of sheet metal plates 46 whose sides 47 and 48 are constructed similar to those of plates 15 to form interlocking connections. The lower end of each gable plate has an extension 49 which is turned under at its edge to form a flange 50 and a groove into which the front frame member 36 and the rear frame 35 may be fitted and be secured thereto by suitable fastening means such as bolts 51. The upper ends of the gable plates are bent to form a tubular portion 52 as shown at 53 in Fig. 2 and are provided with inwardly extending flanges 54.

The roofing 14 consists of a plurality of sheet metal plates whose sides 55 and 56 are constructed similar to those of plates 15 to form interlocking connections. The lower end of the roofing plates 14 is bent over to form a flange 57 and a groove into which the edges of the side-frames are fitted and the upper end is extended upwardly to form the extension 58 as shown in Fig. 3.

An inner ridge member 59 having a central web 60 and angularly extending sides 61 is connected to the extensions 58 by suitable bolts 62.

An outer ridge member 63 fits over the upper end of the web 60 of the member 59 is recessed at 64 adjacent the tubular sides of the roofing plates and is secured to the member 59 by bolts 65.

The sides and ends being in position as previously pointed out, we will now describe the manner of assembling the other parts of the structure.

When the sides and ends are in place the frame members 35 and 36 may be secured in position as previously pointed out. Then the gable plates 46 are placed in position, the manner of connecting the interfitting ends being the same as that employed in connecting up the side plates but in this instance after turning the adjacent gable member so that it lies in the same plane as the one next to it this plate must be forced up so that its flange 49 receives the end of the end frame members. The gables being in place the roofing plate adjacent the rear end is forced into position, the tubular connections of the gable plates and the roofing plates interfitting with each other as previously pointed out. Then the other roofing plates 15 with the exception of the one adjacent the front end are placed in position in a manner similar to that of connecting up the gable plates, the roofing plates being forced into position so that the flanges 57 may receive the frame members 35 therebetween. The last roofing plate, that is, the one adjacent the front end unlike the other members of the structure, is not slipped on at an angle to the adjacent plate and later turned down so as to lock the connection between them but it forms what may be termed the "key member" of the structure and must be forced on so that its tubular sides engage with the adjacent roofing plate and with the tubular ends of the gable plates respectively. The roofing is then secured to the frame member 35 by suitable fastening means 66. The gable plates being likewise secured to the frame members the inner and outer ridge members 59 and 63 respectively, are secured in position in a manner previously set forth which completes the erection of the building.

By forming the flanges and grooves on the undersides of the lower edges of the roofing and gable plates, provides an unobstructed upper surface or water-shed around the lower edge of the roof and gables, and a thick overhanging portion which is additionally reinforced at its extreme edge by the underlying flanges, thereby forming a rigid edge which will not warp out of shape.

The invention thus exemplifies a portable building construction consisting of a plurality of sheet metal plates provided with interlocking connections to form the sides, ends, gables and roofing for the building.

The invention is not to be restricted to the details of construction herein set forth but may be varied so as to be within the scope of the appended claim.

What I claim as my invention is:

In a portable building having a rear wall and side walls, downwardly inclined frame members mounted on the upper edges of said walls and across the front side of the building, a plurality of vertical interlocked plates at the front and rear sides of the building forming gables, each of said plates having at its lower edge a downwardly inclined extension provided with an underturned flange at its extreme edge forming a groove for the reception of the free edge of its downwardly inclined frame member and adapted for fixed engagement with said

member, and a locking means along its top edge, a plurality of interlocked roofing plates secured to said frame members on the side walls of the building and also being provided with underturned flanges at their extreme edges forming grooves for the free edges of their supporting frames, the end roofing plates being interlocked with the locking means on the top edge of said gable plates, and means for securing the top edges of said roofing plates together.

In testimony whereof, I affix my signature in presence of two witnesses.

WALTER SKIPWORTH.

Witnesses:
LOUIS O. FRENCH,
ARTHUR F. MILLER.