May 27, 1930. C. B. SLEDGE ET AL 1,760,785

HOLDER FOR MAPS, ETC

Filed Sept. 13, 1929 2 Sheets-Sheet 1

Fig. 1.

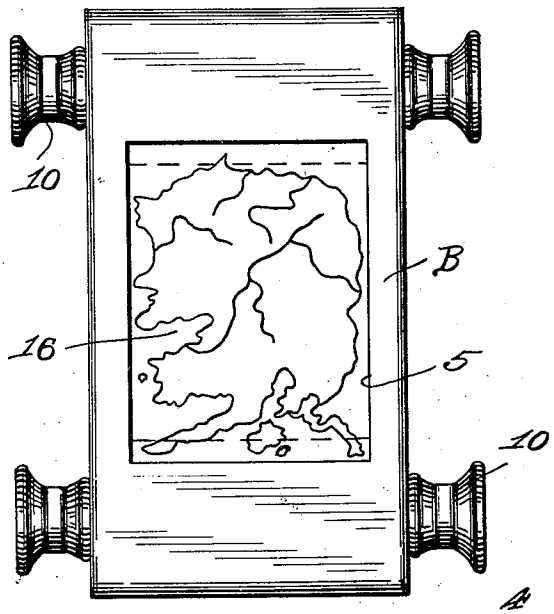

Fig. 2.

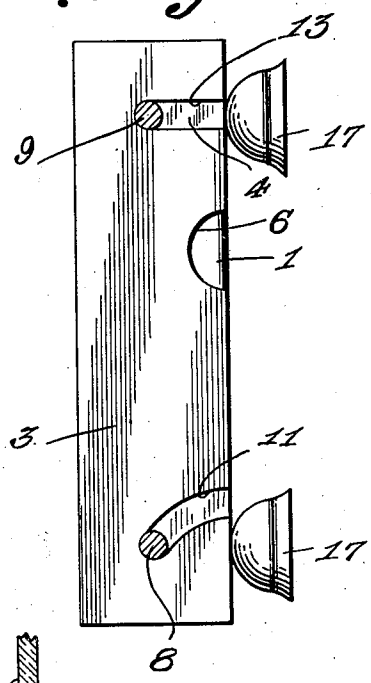

Fig. 3.

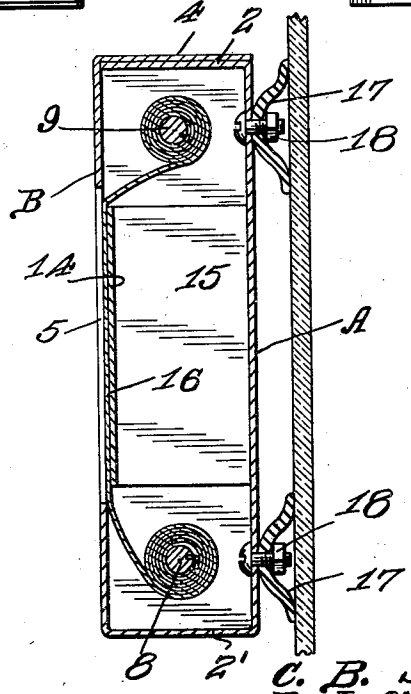

C. B. Sledge,
D. J. O'Connor, Jr.
INVENTOR

BY Victor J. Evans
ATTORNEY

WITNESS

May 27, 1930. C. B. SLEDGE ET AL 1,760,785

HOLDER FOR MAPS, ETC

Filed Sept. 13, 1929 2 Sheets-Sheet 2

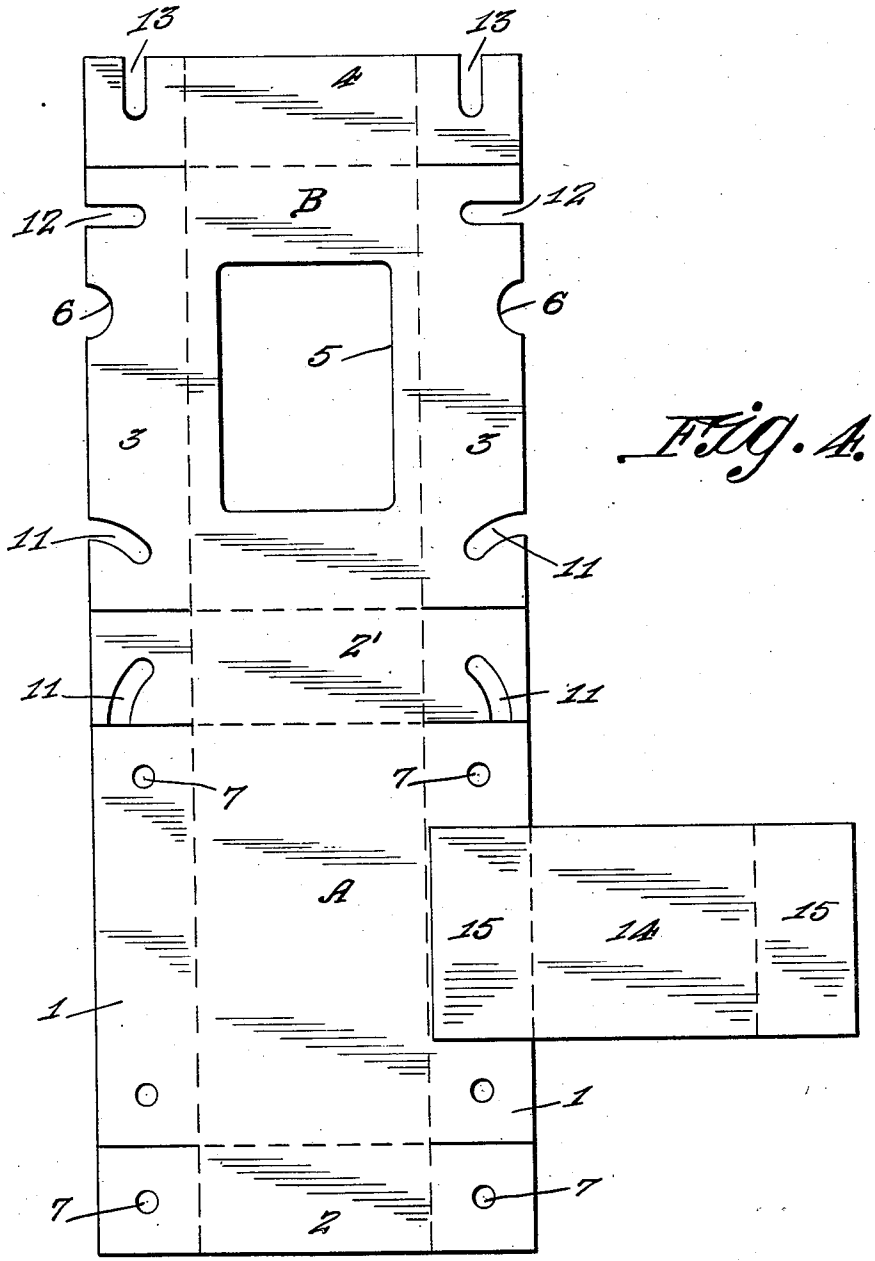

Fig. 4.

C. B. Sledge,
D. J. O'Connor Jr.
INVENTOR

BY Victor J. Evans
ATTORNEY

WITNESS:

Patented May 27, 1930 1,760,785

UNITED STATES PATENT OFFICE

CECIL B. SLEDGE AND DANIEL J. O'CONNOR, JR., OF AUGUSTA, GEORGIA

HOLDER FOR MAPS, ETC.

Application filed September 13, 1929. Serial No. 392,380.

This invention relates to a case having an opening in its top and carrying a pair of shafts to which is attached the end of a strip, so that by turning either one of the shafts, the strip can be moved across the opening so that data on the strip can be seen through the opening, the general object of the invention being to so construct the parts of the case that the case and its cover are formed of one piece of material, with the openings so arranged in the parts that the cover can be moved to open and closed position without interference on the part of the shafts and the shafts acting as means for holding the parts in operative position. The device can be used with maps, scenic views, etc.

Another object of the invention is to provide vacuum cups on the bottom of the device so that the device can be easily and quickly attached to a surface.

This invention also consists in certain other features of construction and in the combination and arrangement of the several parts to be hereinafter fully described, illustrated in the accompanying drawings and specifically pointed out in the appended claim.

In describing the invention in detail, reference will be had to the accompanying drawings wherein like characters denote like or corresponding parts throughout the several views, and in which:—

Figure 1 is a front view of the device, showing a map used therewith.

Figure 2 is a side view thereof.

Figure 3 is a longitudinal sectional view thereof.

Figure 4 is a view of the blank from which the device is formed.

In these views, A indicates the body part of the device and B the cover part. As shown in Figure 4, these parts are formed of a single piece of material, such as cardboard, tin or other flexible material. The part A is formed with the side flaps 1, the end flap 2 and the end flap 2′ which connects the parts A and B together. The part B is formed with the side flaps 3 and the end flap 4. The part B is formed with an opening 5 in its top and with the finger receiving recesses 6 in the edges of the flaps 3. The flaps 1 and 2 are formed with the holes 7, the holes in the flap 2 registering with the holes in the adjacent ends of the flaps 1 when the flaps are turned at rightangles to form a box-like receptacle. A shaft 8 is passed through the registering holes of the flaps 1 and 2 and a shaft 9 is passed through the holes of the flaps 1 which are adjacent the flap 2′. The shafts have their ends projecting from the sides of the body A and knobs 10 are secured to these projecting ends, so that the shafts can be turned by turning the knobs. The flap 2′ and the adjacent ends of the flaps 3 are formed with curved notches 11 which will pass over the shaft 9 when the flap 2′ is bent at rightangles and its ends turned at rightangles, and the notches 11 of the flaps 3 will also pass over said shaft when the cover part B is moved to closed position over the body part A. Straight notches 12 are formed in the flaps 3 adjacent their outer ends and straight notches 13 are formed in the flap 4 so that when the flap is bent at right angles and its ends bent over the flap 3, the straight notches 12 and 13 will register with each other and will pass over the ends of the shaft 8 when the cover is moved to closing position, as clearly shown in Figure 3.

Thus the cover can readily be moved to open or closed position without interference on the part of the shafts and the shafts and the knobs thereon will act to hold the cover in closed position. The recesses 6 will permit the cover to be moved to open position by engaging said recesses with the fingers.

A bridge piece 14 formed with the flaps 15 has one of the flaps fastened to one of the flaps 1, so that when the bridge piece is bent into channel shape, it will fit in the body and extend under the opening in the cover 5 and thus act as a support for the strip 16 which has its ends connected with the shafts 8 and 9, as shown in Figure 3.

Thus it will be seen that by turning either shaft, the strip will be caused to move over the bridge piece and under the opening, so that the indicia on the strip can be seen through the opening. This strip can contain indicia of maps, pictures and the like.

Vacuum cups 17 are fastened to the bot-

tom of the body A by the bolts 18 or the like so that the device can be readily attached to a surface, as shown in Figure 3.

It is thought from the foregoing description that the advantages and novel features of the invention will be readily apparent.

It is to be understood that changes may be made in the construction and in the combination and arrangement of the several parts, provided that such changes fall within the scope of the appended claim.

What we claim is:—

A holder of the class described comprising a body part and a cover part formed of one piece of material, said parts including end and side flaps, one end flap connecting the two parts together, the opposite end flap of the body part and the side flaps of said part having holes therein, the holes of said end flap registering with a pair of holes in the side flaps when said flaps are bent at right-angles and the ends of the end flap turned inwardly, a shaft passing through said registering holes, a second shaft passing through the other holes in the side flaps, knobs on the ends of the shafts, the connecting end flap and the adjacent ends of the side flaps of the cover part having curved notches therein which will register with each other when said end flap and the side flaps are bent at right-angles and the ends of the end flap turned inwardly, the other end flap of the cover part and the adjacent ends of the side flaps thereof having straight notches therein which will register with each other when the flaps are bent at right angles and the ends of the end flap bent inwardly, said curved and straight notches passing over the ends of the shafts when the cover part is moved to closing position, said cover part having an opening in its top, a strip connected with the ends of the shaft and passing under the opening when either shaft is turned and a supporting member in the body part over which the strip passes.

In testimony whereof we affix our signatures.

CECIL B. SLEDGE.
DANIEL J. O'CONNOR, JR.