(No Model.) 2 Sheets—Sheet 1.

M. B. CAMPBELL.

SAW MILL LOG CARRIAGE.

No. 250,884. Patented Dec. 13, 1881.

Fig. 1

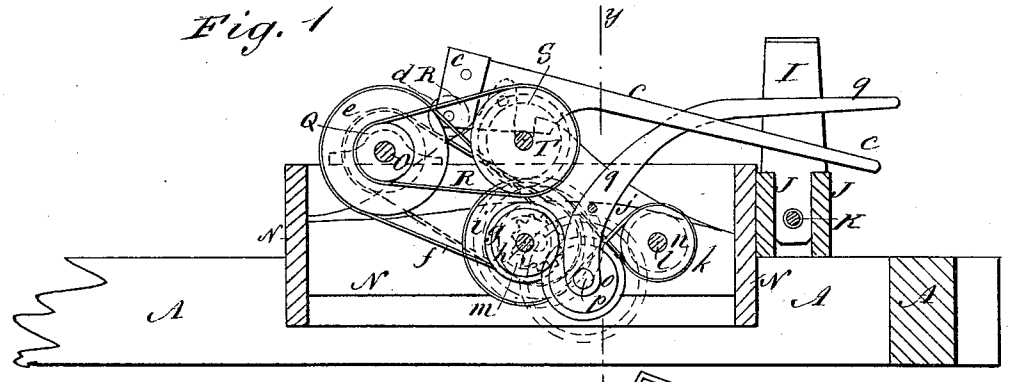

Fig. 2

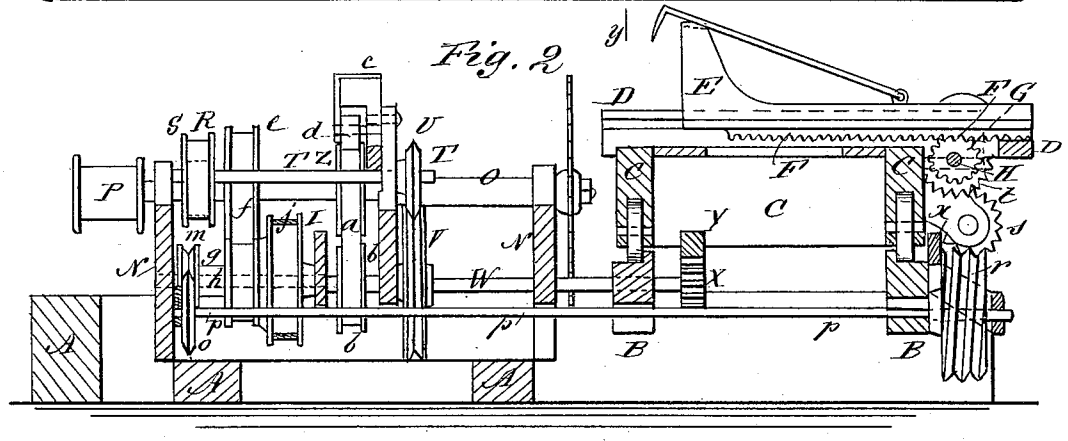

Fig. 3

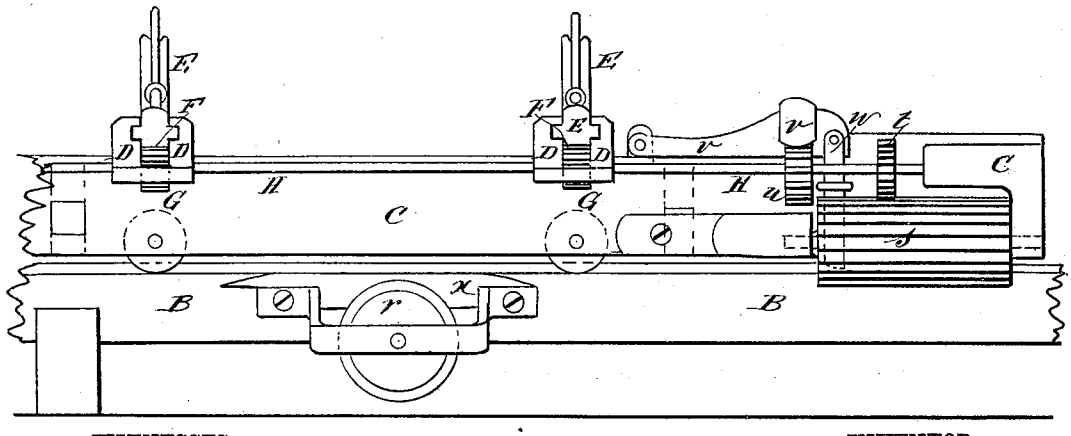

WITNESSES:

C. Neveux

A. Bedgwick

INVENTOR:

M. B. Campbell

BY Munn & Co

ATTORNEYS.

N. PETERS. Photo-Lithographer, Washington, D. C.

(No Model.) 2 Sheets—Sheet 2.

M. B. CAMPBELL.

SAW MILL LOG CARRIAGE.

No. 250,884. Patented Dec. 13, 1881.

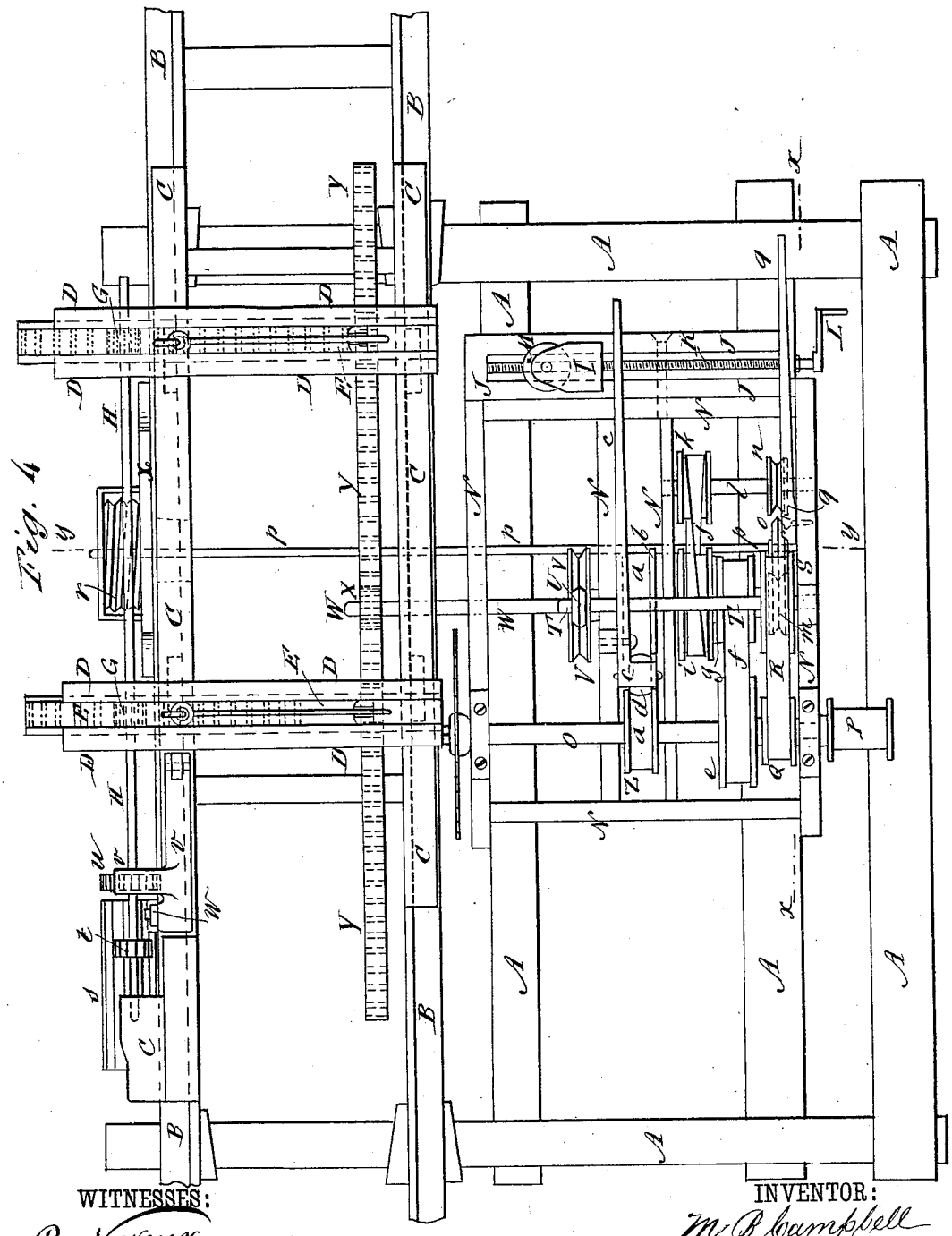

Fig. 4.

WITNESSES:

C. Neveux

E. Sedgwick

INVENTOR:

M. B. Campbell

BY Munn & Co

ATTORNEYS.

N. PETERS. Photo-Lithographer. Washington, D. C.

UNITED STATES PATENT OFFICE.

MORGAN B. CAMPBELL, OF BEVERLY, WEST VIRGINIA.

SAW-MILL LOG-CARRIAGE.

SPECIFICATION forming part of Letters Patent No. 250,884, dated December 13, 1881.

Application filed August 4, 1881. (No model.)

To all whom it may concern:

Be it known that I, MORGAN B. CAMPBELL, of Beverly, in the county of Randolph and State of West Virginia, have invented a new and Improved Mechanism for Setting Logs on Saw-Mill Carriages, of which the following is a specification.

In the accompanying drawings, Figure 1, Sheet 1, is a sectional elevation of my improvement, taken through the line *x x*, Fig. 4. Fig. 2, Sheet 1, is a sectional elevation of the same, taken through the line *y y*, Figs. 1 and 4. Fig. 3, Sheet 1, is a side elevation of the same. Fig. 4, Sheet 2, is a plan view of the same.

Similar letters of reference indicate corresponding parts.

The object of this invention is to facilitate the setting of logs on saw-mill carriages.

In the drawings, A represents the frame of the saw-mill; B, the carriage track or way, and C the carriage. To the carriage C are attached cross-beams D, in which are formed dovetailed or T grooves to receive the knees E.

Upon the bases of the knees E are formed, or to them are attached, toothed bars F, into the teeth of which mesh the teeth of small gear-wheels G. The gear-wheels G are attached to a shaft, H, which works in bearings attached to the outer ends of the cross-beams D, or other suitable support, so that by turning the shaft H in one direction, the knees E will be moved forward to set the log to the saw, and by turning the shaft H in the other direction the knees E will be moved back to receive another log.

The forward movement of the log is limited by a gage, I, the lower part of which, or a long tenon formed upon the said lower part, fits into the space between the cross-bars of a frame, J, attached to the frame A.

In the lower part of the gage I is formed a screw-hole to receive a screw, K, which is swiveled to the end bars of the frame J, and has a crank, L, formed upon or attached to its outer end, so that the gage I can be readily adjusted at any desired distance from the plane of the saw. The friction between the gage I and the log is lessened by a roller, M, placed at the forward side of the said gage, and journaled to supports attached to the gage.

To the frame A is attached the box or frame N that carries the feed mechanism, and to which is journaled the saw-mandrel O.

To the outer end of the mandrel O is attached a pulley, P, to receive the driving-belt. To the mandrel O is attached a small pulley, Q, around which passes a belt, R. The belt R also passes around a large pulley, S, attached to a shaft, T, the outer end of which revolves in bearings attached to the box or frame N. The inner part of the shaft T revolves in a slot bearing in the inner part of the box or frame N, and to its inner end is attached a friction-wheel, U, which, when the shaft T is pressed downward, engages with a friction-wheel, V, attached to the shaft W, and revolves the said shaft. The shaft W revolves in bearings in the box or frame N and in the track B, and has a gear-wheel, X, attached to its forward end, the teeth of which mesh into the teeth of a toothed bar, Y, attached to the carriage C, so that the said carriage will be moved forward by the revolution of the saw-mandrel to feed the log to the saw.

To the mandrel O is attached a small pulley, Z, around which passes a slack-belt, *a*. The belt *a* also passes around a larger pulley, *b*, attached to the feed-shaft W. The shaft T is pressed down to hold the friction-wheel U in gear with the friction-wheel V by a lever, *c*, pivoted to the box or frame N, and which rests upon the said shaft T.

To the short arm of the lever *c* is pivoted a friction-pulley, *d*, which, when the said lever is raised off the shaft T, is pressed down upon the belt *a* to tighten it, so that it will turn the feed-shaft W in the other direction and run the carriage C back from the saw.

To the saw-mandrel O is attached a large pulley, *e*, around which passes a belt, *f*. The belt *f* also passes around a small pulley, *g*, attached to the shaft *h*, to which is also attached a large pulley, *i*. Around the pulley *i* passes a belt, *j*, which is crossed and passed around a smaller pulley, *k*, attached to the shaft *l*, so that the shafts *h l* will be revolved in opposite directions.

If desired, the pulleys *i k* and belt *j* can be replaced by gear-wheels meshing into each other. The shafts *h l* revolve in bearings attached to the box or frame N, and to the said shafts are attached, respectively, the friction-wheels *m n*. Between the friction-wheels *m n* is placed a friction-wheel, *o*, which is attached to the shaft *p*. The outer end of the shaft *p*

revolves in bearings in the lower end of the lever *q*, which is pivoted to the side of the box or frame N, above and between the shafts *h l*, with its upper end projecting into such a position that it can be conveniently reached and operated by the sawyer to throw the friction-wheel *o* into gear with either of the friction-wheels *m n*, as required. The other end of the shaft *p* revolves in bearings attached to the outer part of the track B or other suitable support.

To the shaft *p*, at the outer side of the track B, is attached a large screw-wheel, *r*, the threads of which are adapted to mesh into the teeth of a long gear-wheel, *s*, journaled to bearings attached to the carriage C. The teeth of the long gear-wheel *s* mesh into the teeth of the short gear-wheel *t* attached to the shaft H, that moves the knees E, so that the said knees can be moved forward to set the log up to the saw by throwing the friction-wheel *o* into gear with the friction-wheel *m*, and can be moved back to receive another log by throwing the friction-wheel *o* into gear with the friction-wheel *n*.

To the shaft H is attached a ratchet-wheel, *u*, with the teeth of which engage the teeth of the pawl *v*, which pawl *v* is so formed as to hold the ratchet-wheel *u* and shaft H from being turned in either direction. The rear end of the pawl *v* is hinged to the side beam of the carriage C, so that it can be easily raised from the ratchet-wheel *u* when desired.

To the forward end of the pawl *v* is hinged the upper end of a bar, *w*, which passes down through a keeper attached to the side of the carriage C. The lower end of the bar *w* projects below the carriage C, so as to come in contact with and be raised by the guide-bar *x*, attached to the side of the track B, and which has its ends inclined or beveled, as shown in Fig. 3, so that it will readily raise the said bar *w*. The guide *x* is attached to the track B in such a position as to raise the pawl *v* from the ratchet-wheel *u*, as the long gear-wheel *s* comes in contact with the screw-wheel *r*, to allow the knees E to be moved. As the long gear-wheel *s* passes off the screw-wheel *r* the bar *w* passes off the guide-bar *x* and allows the pawl *v* to again engage with the ratchet-wheel *u* and lock the said knees E in place. With this construction the head sawyer has the knees of the carriage under complete control, and can set the log and run back the knees to receive another log without leaving his place.

Having thus fully described my invention, I claim as new and desire to secure by Letters Patent—

1. In a mechanism for setting logs on saw-mill carriages, the combination, with the saw-mandrel O, and the shaft and gear-wheels H G that move the knees E, of the pulleys *e g i k*, and belts *f j*, the friction-wheels *m n o*, lever *q*, shaft *p*, screw-wheel *r*, long gear-wheel *s*, and short gear-wheel *t*, substantially as herein shown and described, whereby the knees can be moved forward to set the log, and moved back to receive another log from the saw-mandrel, as set forth.

2. The combination, with the carriage C, the track B, and the pawl *v*, of the bar *w*, and the guide-bar *x*, substantially as herein shown and described, whereby the knees will be locked and released automatically, as set forth.

MORGAN B. CAMPBELL.

Witnesses:
W. A. MOORE,
JACOB G. WARD.